PLANNING COMMISSION AGENDA

NOTICE IS HEREBY GIVEN THAT THE CENTERVILLE PLANNING COMMISSION WILL HOLD A REGULAR MEETING AT 7:00 PM ON AUGUST 9, 2023 AT CENTERVILLE CITY HALL, 250 NORTH MAIN STREET, CENTERVILLE, UTAH.

Centerville City Planning Commission meetings are open to the public, unless otherwise closed for reasons allowed by law. Centerville City Planning Commission meetings may be conducted via electronic means pursuant to Utah Code § 52-4-207. In compliance with the Americans with Disabilities Act, individuals needing special accommodations due to a disability may contact the City Recorder at (801) 295-3477, at least 24 hours in advance of the meeting. The Commission reserves the right to modify the sequence of agenda items in order to facilitate special needs or provide greater efficiency.

The full agenda packet and backup materials can be found on the Centerville City website at:
https://centervilleutah.gov/129/Agendas-Minutes

A. CALL TO ORDER

1. **ROLL CALL**
2. **LEGISLATIVE PRAYER OR THOUGHT**
3. **PLEDGE OF ALLEGIANCE**

B. BUSINESS ITEMS

Business action or discussion items to be considered by the Planning Commission.

1. PUBLIC MEETING - Final Site Plan, 335 S. Frontage Rd. Miles Bell LC - ADMINSTRATIVE DECISION
   The applicant, Mr. David Bell, desires to create an interconnection of the existing site to the adjacent property to the north (*former Les Schwab Site*)
2. PUBLIC MEETING - Final Site Plan, 285 S. Frontage Rd. Aiden Bell LC - ADMINSTRATIVE DECISION

C. COMMUNITY DEVELOPMENT DIRECTORS REPORT

1. Community Development Director's Report
   Next Planning Commission Meeting - **August 23, 2023**
   Tentative Items:

   - *Preliminary Subdivision PUD, Parrish Creek Business Park*
   - *Parking Modification Request - Top Gear Motors LLC*
   - *Conditional Use Permit - Top Gear Motors LLC*
   - *Legacy Crossing at Parrsh Lane PDO Amendment*
   - *Proposed City Code Text Amendment - CZC 12.41.060(b)(5-6)*
   - *Proposed General Plan Amendments - CMC 12-430-3(2) & 12-480-6(4)*

D. MINUTES

Minutes of prior meetings may be reviewed and accepted. Minutes review and approval shall comply with the Centerville City Minutes Approval Policy.

1. Minutes Review and Approval

E. ADJOURNMENT

CERTIFICATE OF POSTING

I hereby certify that this notice and agenda was posted at Centerville City Hall, published on the Utah Public Notice Website, and provided to a newspaper or media correspondent in accordance with the requirements of the Utah Open and Public Meetings Act, including, but not limited to, provisions of Utah Code § 52-4-202.

Jennifer Robison
Centerville City Recorder

PLANNING COMMISSION

Staff Report

8/9/2023

Item No. 1.
Title: PUBLIC MEETING - Final Site Plan, 335 S. Frontage Rd. Miles Bell LC - ADMINSTRATIVE DECISION
Initiated By: Applicant
Staff Representative: Cory Snyder, Community Development Director

SUBJECT:

The applicant, Mr. David Bell, desires to create an interconnection of the existing site to the adjacent property to the north (*former Les Schwab Site*)

RECOMMENDATION:

BACKGROUND:

ATTACHMENTS:

1. 08-09-2023 PC Staff Report - Final Site Plan Amendment, Miles Bell LC Property
2. 2023-07-18 Dave's Auto Miles Bell LC Civil Set
3. Landscape - Miles Bell Daves Complete Auto (1)
4. 2023.07.18 - Cross Access Easement Agreement

CENTERVILLE CITY
COMMUNITY DEVELOPMENT DEPARTMENT

655 North 1250 West, Centerville, Utah 84014
(801) 292-8232

STAFF REPORT
AGENDA: ITEM 1

APPLICANT: **DAVE'S COMPLETE AUTO**
c/o DAVID BELL
335 SOUTH FRONTAGE ROAD
CENTERVILLE, UTAH 84014
(davescompleteauto@gmail.com)

PROPERTY: **335 SOUTH FRONTAGE ROAD**

PROPERTY OWNER: **MILES BELL LC**
335 SOUTH FRONTAGE ROAD
CENTERVILLE, UTAH 84014

ACREAGE: **1.29 ACRES**

ZONING: **COMMERCIAL VERY-HIGH (C-VH)**

APPLICATIONS:

- **FINAL SITE PLAN APPROVAL**
  FOR AMENDING THE SITE LAYOUT BY INTERCONECTING TO ADJACENT PROPERTY (FORMER LES SCHWAB SITE), WITH MINOR PARKING, AND LANDSCAPING ALTERATIONS.

RECOMMENDATION: **CONSIDER FINAL SITE PLAN APPROVAL**

BACKGROUND

The applicant, Mr. David Bell, desires to create an interconnection of the existing site to the adjacent property to the north (*former Les Schwab Site*). The connections can be summarized as follows:

- Create two interconnecting access drives – one in front (*west*) and another in the back (*east*).
- Connect the two buildings with an 8-foot precast concrete style fence (west) and a secure chain-link style fence (*east side of adjoining site*) to create a common storage/parking area.
- Make several minor landscaping changes, as necessary to accomplish these interconnections.

PREVIOUS CONCEPTUAL SITE PLAN ACCEPTANCE

On July 12, 2023, the Planning Commission voted to ***ACCEPT*** *the Conceptual Site Plan for the proposed changes to site of the Dave's Complete Auto, located at 335 South Frontage Road, with the following directives:*

1. *The applicant shall submit a final site plan application meeting the standards found in CZC 12.21.110.e of the Zoning Ordinance.* **Completed**
2. *The Final Site Plan shall be substantially consistent with this Conceptual Site Plan submittal and related acceptance, which includes the following:*
    a. *Create two interconnecting access drives – one in front (west) and another in the back (east).* **Consistent with Conceptual**
    b. *Connect the two buildings with an 8-foot precast concrete style fence (west) and a secure chain-link style fence (east side of adjoining site) to create a common storage/parking area.* **Consistent with Conceptual**
    c. *At Final Site Plan submittal, the applicant may propose a fence height up to 10 feet along the west elevations, provided there is an engineering rational behind the request.* ***Final Site Plan Depicts 8-foot fence***
    d. *Make several minor landscaping changes, as necessary to accomplish these interconnections.* **Depicted**
    e. *Installation of required Public Improvements (e.g. public sidewalk), as outlined in the Delayed Improvements Agreement with the City.* **Depicted**
3. *The final site plan submittal shall also address the following:*
    a. *Provide one (1) additional parking stall to replace the stall that is being eliminated in order to maintain original nonconforming parking stall count.* **Completed, however the related drive isle between the new stall and the existing angle parking needs to comply with CZC 12.52.310 or relocated in a manner that complies with the City's Parking Standards.**
    b. *Submit final construction plans for the public improvements and related modified storm water management system plan to be deemed acceptable by the City Engineer* **Ongoing**
    c. *Prepare and submit the draft cross-access agreement for the proposed access drives and security fencing between this property and the site adjacent to the north (i.e. former Les Schwab site).* **Completed**
    d. *Submit for and receive from the City any related Building Permits for the proposed development* **Ongoing**

PLANNING STAFF RECOMMENDATION

PROPOSED ACTION: "*I hereby make a motion for the Planning Commission to* ***APPROVE*** *the Final Site Plan, Amendments, for the proposed changes to site of the Dave's Complete Auto, located at 335 South Frontage Road, with the following directives:*

4. *This Final Site Plan Approval shall be limited to the following:*
    a. *Create two interconnecting access drives – one in front (west) and another in the back (east).*

b. *Connect the two buildings with an 8-foot precast concrete style fence (west) and a secure open style fence (east side of adjoining site) to create a common storage/parking area.*
c. *The related drive isle between the new stall and the existing angle parking shall comply with CZC 12.52.310, or relocated in a manner that complies with the City's Parking Standards, which shall be deemed acceptable by the Zoning Administrator. Any disputes regarding compliance shall be returned to the Planning Commission for their review and final approval.*
d. *Installation of the revised landscaping design, as submitted to the City with the Final Site Plan submittal.*
e. *Installation of required Public Improvements (e.g. public sidewalk), as outlined in the Delayed Improvements Agreement with the City.*
f. *Final construction plans for the public improvements and related modified storm water management system plan shall be deemed acceptable by the City Engineer*
g. *Recordation of the cross-access agreement for the proposed access drives and security fencing between this property and the site adjacent to the north (i.e. former Les Schwab site)*, as deemed acceptable by the City Attorney.
h. *Submit for and receive from the City any related Building Permits for the proposed development.*
i. *If any future changes and/or amendments shall be subject to the applicable regulations for Site Plan Approval.*

SUGGESTED REASONS FOR THE ACTION:

a) *The Planning Commission finds that, with the conditions imposed, the proposed amendments comply with CZC 12.21.110(f), Standards for Approval, as also reviewed in the related Planning Staff reports.*
b) *The Planning Commission finds that the existing site, as submitted, will not increase the degree of non-conformities with regards to site landscaping, screening, or other issues, as described in CZC 12.22.080 of the Zoning Ordinance.*
c) *The Planning Commission finds that the proposed increase in fence height to 8-feet is for security purposes and its design is aesthetically compatible with the existing buildings that are being connected to create the desired security area.*

FT
0 20 40

EXISTING CONDITIONS LEGEND

- FOUND NAIL AND CONTROL POINT
- GATE, BOLLARD
- POWER, LIGHT POLE AND SIGNAL
- BUILDING COLUMN
- BAY DOOR
- EB — ELECTRICAL UTILITY
- G — GAS METER/SIGN
- CULINARY WATER METER
- CULINARY HYDRANT, BUTTERFLY VALVE, GATE VALVE, AND GENERIC VALVE
- IRRIGATION BUTTERFLY VALVE, GATE VALVE, AND GENERIC VALVE
- MH, SD, SS — UTILITY MANHOLE
- STORM DRAIN INLET BOX
- CONCRETE MASONRY WALL
- CURB AND GUTTER
- SS — SANITARY SEWER
- SD — STORM DRAIN
- W — CULINARY WATER
- G — GAS
- CM — COMMUNICATIONS
- BP — BURIED POWER
- FO — FIBER OPTICS
- BUILDING
- LOT LINES
- EASEMENTS
- STRUCTURES
- 4200 — MAJOR CONTOUR
- 4201 — MINOR CONTOUR

SURVEY CONTROL TABLE

POINT #	PROJECT COORDINATES (MEAS.) NORTHING	EASTING	ELEVATION	DESCRIPTION
100	1532578.235	3492678.553	4252.581	CP 100 MAG
101	1532786.660	3492701.184	4252.876	CP 101 MAG
102	1532786.150	3492835.027	4252.894	CP 102 MAG A.T.
103	1532508.986	3492600.604	4253.098	CP 103 MAG A.T.
104	1532712.552	3492615.570	4253.757	CP 104 MAG A.T
40098	1532451.854	3492634.436	4252.871	FND NAIL IN TBC

LAND USE DATA

TOTAL AREA	56,018 SF
ROOF AREA	13,725 SF
PAVEMENT AREA	39,215 SF
LANDSCAPE AREA	2,628 SF

SHEET NOTES

1. THE ENGINEER HAS MADE AN EXTENSIVE EFFORT TO LOCATE ALL EXISTING UTILITY LINES FROM RECORDS PROVIDED BY OTHERS AND EVIDENCE IN THE FIELD. CONTRACTOR TO VERIFY ALL EXISTING UTILITY LOCATIONS PRIOR TO COMMENCING WORK.
2. PROTECT IN PLACE ALL EXISTING UTILITIES UNLESS OTHERWISE NOTED.
3. CALL BLUESTAKES BEFORE DIGGING 811

CONTACT INFORMATION

Answers to Infrastructure®
ENGINEERING & SURVEYING

4246 S RIVERBOAT RD., STE 200
SALT LAKE CITY, UT 84123
P: 801.359.5565

REVISIONS

LEGAL NOTICE

THE INFORMATION CONTAINED IN THIS DRAWING IS THE PROPERTY OF CRS CONSULTING ENGINEERS, INC. AND IS NOT TO BE REPRODUCED, MODIFIED, OR USED FOR ANY OTHER PROJECT OR EXTENSION OF THIS PROJECT EXCEPT BY AGREEMENT WITH CRS ENGINEERS.

DESIGN

REGISTERED PROFESSIONAL ENGINEER
No. 181650
DOUGLAS CROMAR
07-18-23
STATE OF UTAH

PRINCIPAL : M. HIRST, PE
MANAGER: D CROMAR, PE
REVIEWER : D. CROMAR, PE
DRAFTER : A. MCFARLAND

PROJECT

2023-0103
18 JULY 2023

DAVE'S COMPLETE AUTO

335 S FRONTAGE RD, CENTERVILLE, UT 84014

EXISTING CONDITIONS AND DEMOLITION PLAN

1 OF 2

CS101

U:\83-CF | 03:29 PM TUESDAY 18 JULY 2023 | P:\2023-0103 AIDEN BELL-DAVES COMPLETE AUTO IMPROV\DRAWINGS\SHEETS\CS101.DWG

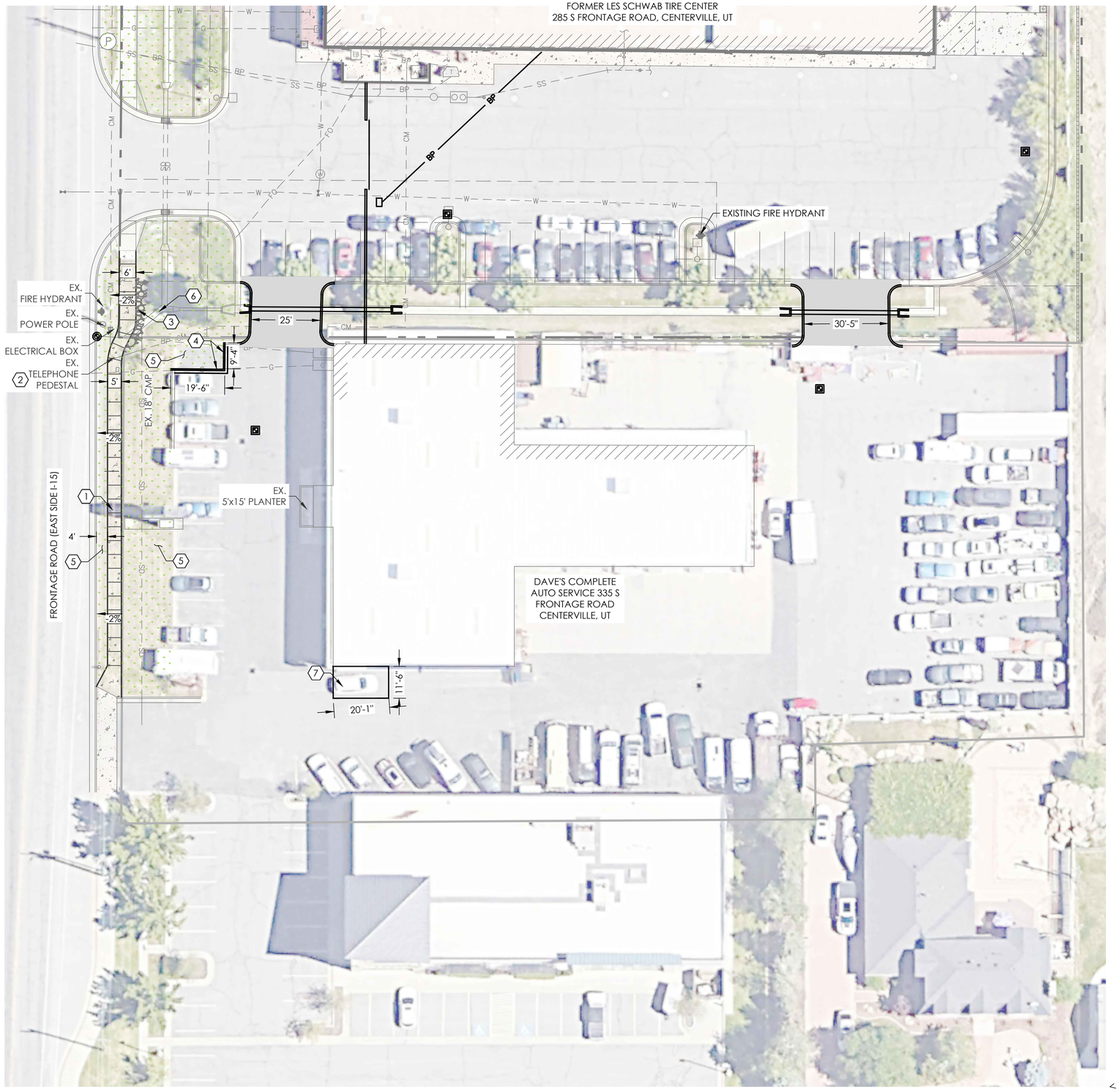

FT
0 20 40

SITE PLAN LEGEND

EXISTING	PROPOSED	
		GATE, BOLLARD
		PAVEMENT STRIPING
		SIGN
		FENCE
		COLLECTING CURB & GUTTER
		SHEDDING CURB & GUTTER
		ASPHALT PAVEMENT
		CONCRETE PAVEMENT
		BUILDING
		PROPERTY LINES
		SAWCUT
		STRUCTURES
		LOT LINES

SITE KEYED NOTES

1	PROPOSED SIDEWALK PER APWA PLAN 231. SEE DIMENSIONS PER PLAN.TIE IN TO EXISTING NORTH ADA RAMP AND EXISTING SOUTH DRIVEWAY. 2% MAXIMUM CROSS SLOPE ON SIDEWALK AND PARK STRIP
2	RELOCATE TELEPHONE PEDESTAL UNDER FRANCHISE AGREEMENT WITH CENTERVILLE CITY
3	RETAIN SOILS FOR NEW SIDEWALK CONSTRUCTION WITH LARGE DIAMETER RIPRAP (16" D50)
4	PROPOSED CURB & GUTTER TO MATCH EXISTING
5	LANDSCAPE - SEE LANDSCAPE PLANS BY LANDCURVE DESIGN
6	EXISTING ORIFICE PLATE AND BOX STRUCTURE. INCREASE DIAMETER OF ORIFICE PLATE OUTLET TO 4" PER RECENT MEETING ON SITE WITH CITY ENGINEER TO DISCUSS SIDEWALK IMPROVEMENTS
7	(1) NEW PARKING STALL TO REPLACE PARKING STALL LOST TO LANDSCAPE IN THE NORTHWEST CORNER OF PARKING LOT

SHEET NOTES

1. THE ENGINEER HAS MADE AN EXTENSIVE EFFORT TO LOCATE ALL EXISTING UTILITY LINES FROM RECORDS PROVIDED BY OTHERS AND EVIDENCE IN THE FIELD. CONTRACTOR TO VERIFY ALL EXISTING UTILITY LOCATIONS PRIOR TO COMMENCING WORK.

CONTACT INFORMATION

Answers to Infrastructure®
ENGINEERING & SURVEYING

4246 S RIVERBOAT RD., STE 200
SALT LAKE CITY, UT 84123
P: 801.359.5565

REVISIONS

LEGAL NOTICE

THE INFORMATION CONTAINED IN THIS DRAWING IS THE PROPERTY OF CRS CONSULTING ENGINEERS, INC. AND IS NOT TO BE REPRODUCED, MODIFIED, OR USED FOR ANY OTHER PROJECT OR EXTENSION OF THIS PROJECT EXCEPT BY AGREEMENT WITH CRS ENGINEERS.

DESIGN

REGISTERED PROFESSIONAL ENGINEER
No. 181650
DOUGLAS CROMAR
07-18-23
STATE OF UTAH

PRINCIPAL : M. HIRST, PE
MANAGER: D CROMAR, PE
REVIEWER : D. CROMAR, PE
DRAFTER : A. MCFARLAND

PROJECT

2023-0103
18 JULY 2023

DAVE'S COMPLETE AUTO

335 S FRONTAGE RD, CENTERVILLE, UT 84014

SITE PLAN | 2 OF 2 | CP101

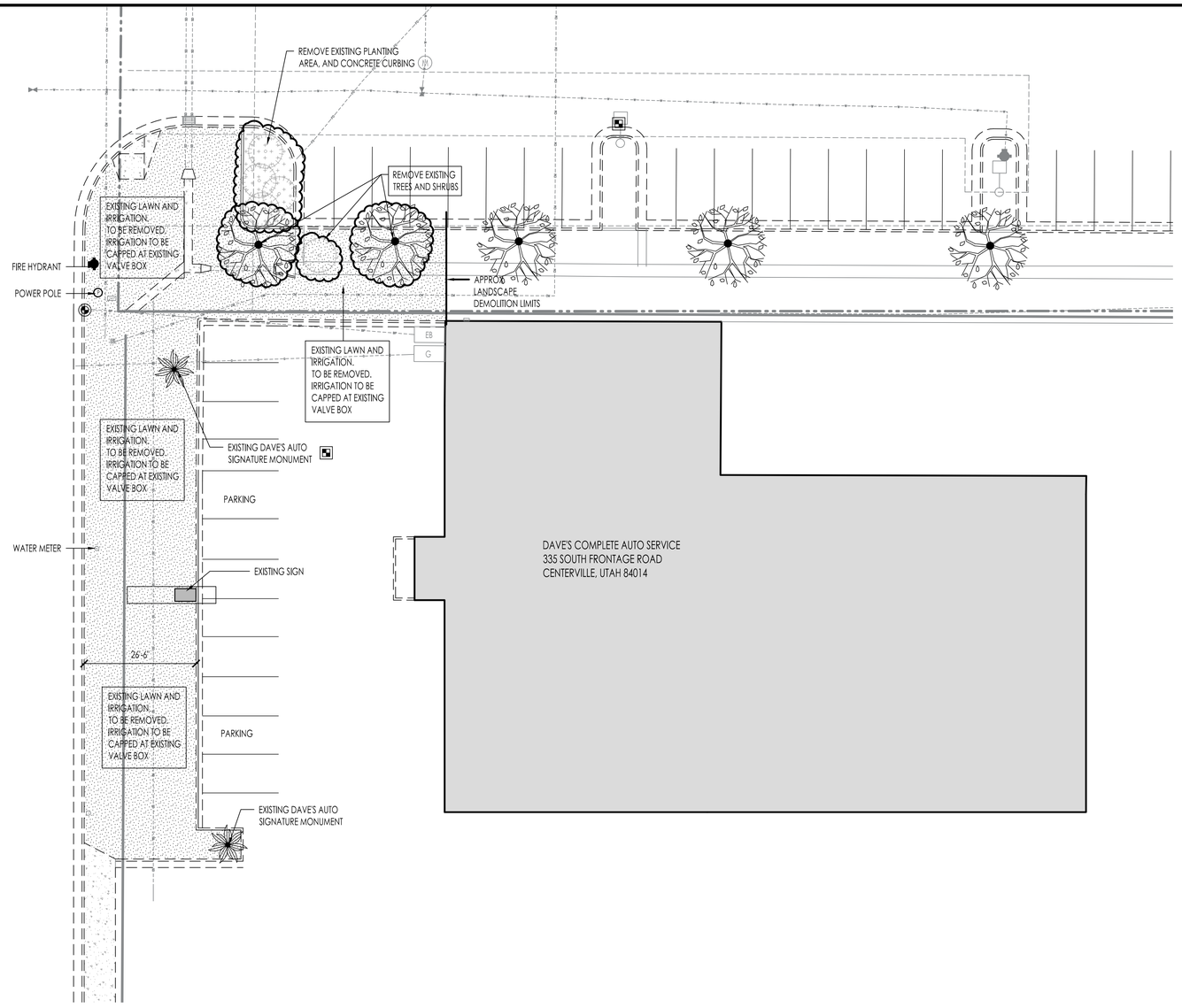

Landscape Tabulations

EXISTING LAWN AREA TO BE REMOVED 5,813 S.F.

EXISTING PLANTING AREA TO BE REMOVED 250 S.F.

TOTAL LANDSCAPE AREA TO BE REMOVED AND REPLACED. SEE NEW LANDSCAPE PLANS 6,063 S.F.

DEMOLITION NOTES

1. CONTRACTOR SHALL BE RESPONSIBLE FOR BECOMING AWARE OR ALL RELATED EXISTING CONDITIONS, UTILITIES, PIPES, AND STRUCTURES, ETC. PRIOR TO BIDDING AND CONSTRUCTION. THE CONTRACTOR SHALL BE RESPONSIBLE FOR CONTACTING ALL UTILITY COMPANIES FOR FIELD LOCATION OF ALL UNDERGROUND UTILITY LINES, INCLUDING DEPTHS, PRIOR TO ANY EXCAVATION. CONTRACTOR SHALL TAKE SOLE RESPONSIBILITY FOR ANY AND ALL COST OR OTHER LIABILITIES INCURRED DUE TO DAMAGE OF SAID UTILITIES/ STRUCTRES/ETC.
2. IF CONFLICTS ARISE BETWEEN SIZE OF AREAS AND PLANS, CONTRACTOR IS REQUIRED TO CONTACT OWNER FOR RESOLUTION. FAILURE TO MAKE SUCH CONFLICTS KNOWN TO THE OWNER WILL RESULT IN CONTRACTORS LIABILITY TO RELOCATE THE MATERIALS.
3. CONTRACTOR SHALL MEET ALL CITY AND OR COUNTY BUILDING STANDARDS.
4. CONTRACTOR SHALL ENSURE THAT ALL NEW GRADES SHALL SLOPE AWAY FROM HOUSE AT MIN. 2%
5. CONTACT BLUE STAKES TO MARK EXISTING UTILITIES PRIOR TO CONSTRUCTION.

TREE REMOVAL NOTES

1. CONTRACTOR SHALL WORK WITH HOMEOWNER TO TAG AND REMOVE ANY TREE THAT MAY NEED TO BE REMOVED BUT ARE NOT NOTED ON PLAN

NORTH

11"X17" 1" = 30'-0"
24"X36" 1" = 15'-0"

0 15' 30 45'

LANDCURVE
LANDSCAPE ARCHITECTURE
2846 Beverly Street
Salt Lake City, Utah 84106
P 801 209 1072
E reid.mitchell@gmail.com

2023-065

STATE OF UTAH
REID B. MITCHELL
LANDSCAPE ARCHITECT

STAMP

REVISIONS

Dave's Complete Auto
Miles Bell
Landscape Plan

335 S. Frontage Rd.
Centerville, Utah 84014

Landscape Demolition Plan

SHEET NAME.

LA1

SHEET NO. 1 OF 3

DATE. 6/21/2023

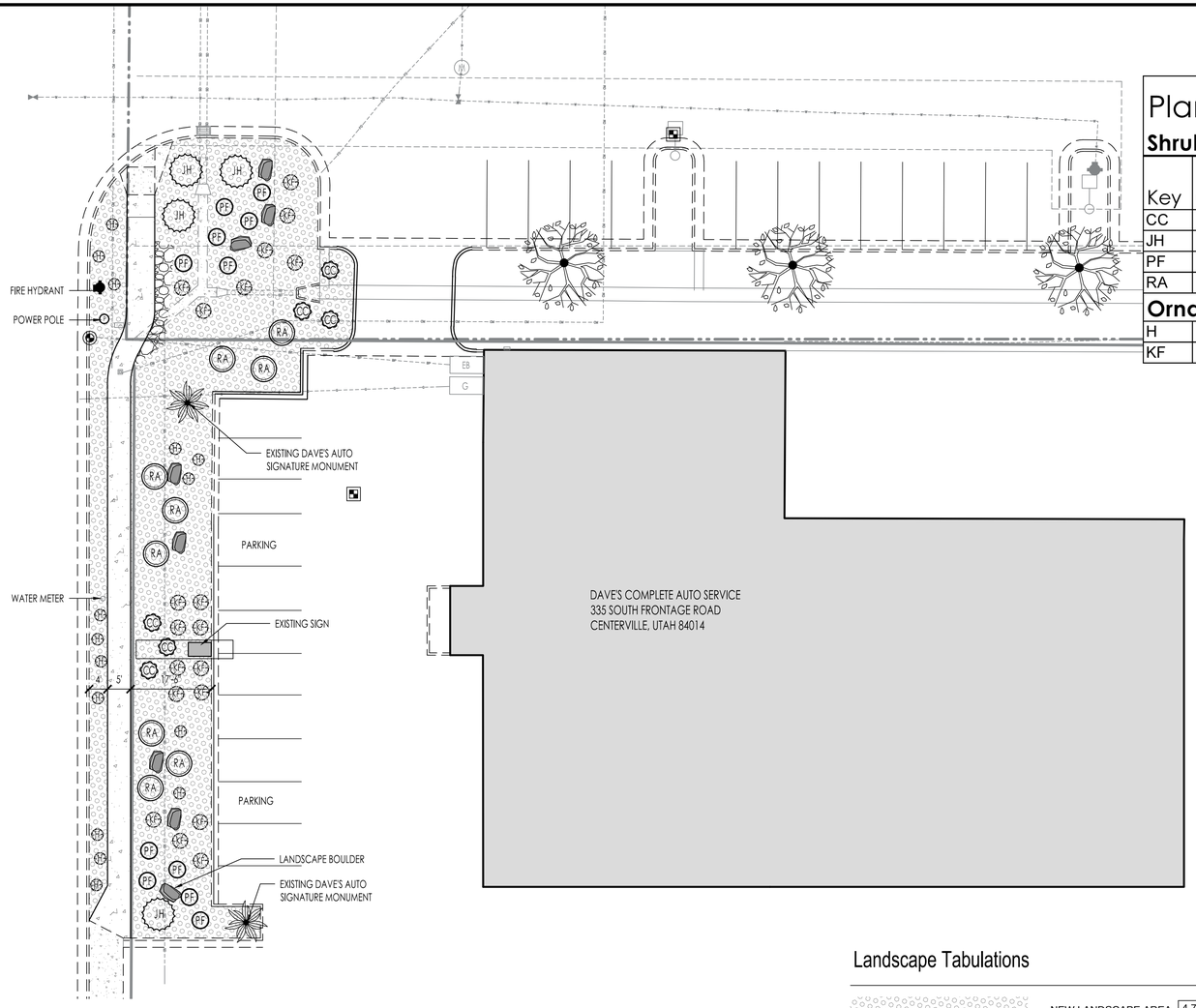

Planting Legend

Shrubs

Key	Qty.	Botanical Name	Common Name	Drought Tollerant	Size	H	W
CC	6	Caryopteris x clandonensis	blauer splatz bluebeard	**yes**	5 GAL.	2'	3'
JH	4	Juniperus communis 'Green Carpet'	Creeping Juniper	**yes**	5 GAL.	2'	6'
PF	11	Potentilla fruticosa 'Gold Drop'	Yellow Shrubby Cinquefoil	**yes**	5 GAL.	3'	3'
RA	9	Rhus Aromatica 'gro-low	gro low sumac	**yes**	5 GAL.	2'	5'
Ornamental Grasses							
H	15	Pennisetum 'Hameln'	Dwarf Fountain Grass	**yes**	2 GAL.	36"	24"
KF	19	Calamagrostis 'karl foerster'	feather reed grass	**yes**	2 GAL.	48"	36"

GENERAL NOTES

1. PLANT NAMES MAY BE ABBREVIATED ON THE DRAWINGS. SEE PLANT LEGEND FOR ABBREVIATIONS, BOTANICAL NAMES, SIZES, ESTIMATED QUANTITIES (IF GIVEN) AND OTHER REMARKS.
2. IT IS THE CONTRACTOR'S RESPONSIBILITY TO FURNISH ALL PLANT MATERIALS FREE OF PESTS OR PLANT DISEASES. PRE-SELECTED OR "TAGGED" MATERIAL MUST BE INSPECTED BY THE CONTRACTOR AND CERTIFIED PEST AND DISEASE FREE. IT IS THE CONTRACTOR'S OBLIGATION TO MAINTAIN AND WARRANTY ALL PLANT MATERIALS PER THE SPECIFICATIONS. ALL PLANTS SHALL BE SUBJECT TO OWNER'S APPROVAL PRIOR TO INSTALLATION.
3. PROVIDE MATCHING SIZES AND FORMS FOR EACH SPECIES OF TREES AND PLANTS INSTALLED GRID OR SPACED EQUALLY IN ROWS AS SHOWN ON DRAWINGS. ADJUST SPACING (EQUAL TO EQUAL) AS NECESSARY, SUBJECT TO ACCEPTANCE BY THE OWNERS REPRESENTATIVE.
4. THE LANDSCAPE CONTRACTOR SHALL TAKE ALL NECESSARY SCHEDULING AND OTHER PRECAUTIONS TO AVOID WINTER, CLIMATIC, WILDLIFE, OR OTHER DAMAGE TO PLANTS. THE CONTRACTOR SHALL INSTALL THE APPROPRIATE PLANTS AT APPROPRIATE TIME TO GUARANTEE LIFE OF PLANTS FOR 12 MONTHS AFTER INSTALLATION.
5. INSTALL LANDSCAPE ROCK AND WEED BARRIER CLOTH AS NOTED ON PLANS AND DETAILS.
6. CONTRACTOR SHALL GUARANTEE ALL LANDSCAPE WORK FOR 1 YEAR FROM SUBSTANTIAL COMPLETION
7. BACK FILL WITH TOPSOIL AS SHOWN ON PLANTING DETAILS. TOPSOIL MATERIAL IS NOT AVAILABLE AT THE SITE AND MUST BE IMPORTED FROM A LOCAL SOURCE. ALL TOPSOIL SHALL BE OF A RICH SANDY LOAM MIX.
8. ALL PLANT MATERIAL HOLES SHALL BE DUG TWICE THE DIAMETER OF THE ROOTBALL AND 6 INCHES DEEPER. EXCAVATED MATERIAL SHALL BE REMOVED FROM THE SITE.
9. PLANT BACKFILL MIXTURE SHALL BE COMPOSED OF 3 PARTS TOPSOIL TO 1 PART HUMUS ADDITIVE, AND SHALL BE ROTARY MIXED ON-SITE PRIOR TO INSTALLATION.
10. CONTRACTOR SHALL BE RESPONSIBLE FOR BECOMING AWARE OR ALL RELATED EXISTING CONDITIONS, UTILITIES, PIPES, AND STRUCTURES, ETC. PRIOR TO BIDDING AND CONSTRUCTION. THE CONTRACTOR SHALL BE RESPONSIBLE FOR CONTACTING ALL UTILITY COMPANIES FOR FIELD LOCATION OF ALL UNDERGROUND UTILITY LINES, INCLUDING DEPTHS, PRIOR TO ANY EXCAVATION. CONTRACTOR SHALL TAKE SOLE RESPONSIBILITY FOR ANY AND ALL COST OR OTHER LIABILITIES INCURRED DUE TO DAMAGE OF SAID UTILITIES/ STRUCTRES/ETC.
11. IF CONFLICTS ARISE BETWEEN SIZE OF AREAS AND PLANS, CONTRACTOR IS REQUIRED TO CONTACT OWNER FOR RESOLUTION. FAILURE TO MAKE SUCH CONFLICTS KNOWN TO THE OWNER WILL RESULT IN CONTRACTORS LIABILITY TO RELOCATE THE MATERIALS.
12. CONTRACTOR SHALL MEET ALL CITY AND OR COUNTY BUILDING STANDARDS.
13. CONTRACTOR SHALL ENSURE THAT ALL NEW GRADES SHALL SLOPE AWAY FROM BUILDING AT MIN. 2%
14. CONTACT BLUE STAKES TO MARK EXISTING UTILITIES PRIOR TO CONSTRUCTION.

Landscape Tabulations

NEW LANDSCAPE AREA 4,753 S.F.
1" LANDSCAPE ROCK @4" THICK
PLACED OVER WEED BARRIER FABRIC
SEE DETAILS THIS SHEET

TOTAL NEW LANDSCAPE AREA 4,753 S.F.

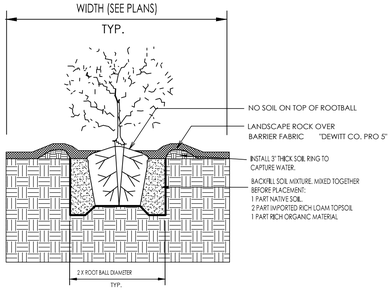

NEW PLANTING DETAIL

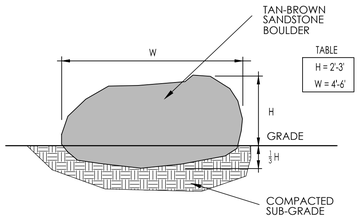

LANDSCAPE BOULDER DETAIL

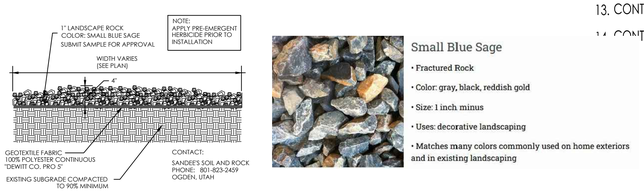

Small Blue Sage

- Fractured Rock
- Color: gray, black, reddish gold
- Size: 1 inch minus
- Uses: decorative landscaping
- Matches many colors commonly used on home exteriors and in existing landscaping

LANDSCAPE ROCK DETAIL

NORTH

11"X17" 1" = 30'-0"
24"X36" 1" = 15'-0"

0 15' 30 45'

LANDCURVE
LANDSCAPE ARCHITECTURE
2846 Beverly Street
Salt Lake City, Utah 84106
P. 801 209 1072
E reid.mitchell@gmail.com

2023-065

STATE OF UTAH
REID B. MITCHELL
6419014-5301
LANDSCAPE ARCHITECT

STAMP

REVISIONS

Dave's Complete Auto
Miles Bell
Landscape Plan

335 S. Frontage Rd.
Centerville, Utah 84014

Landscape Plan

SHEET NAME.

LA2

SHEET NO. 2 OF 3

DATE. 6/21/2023

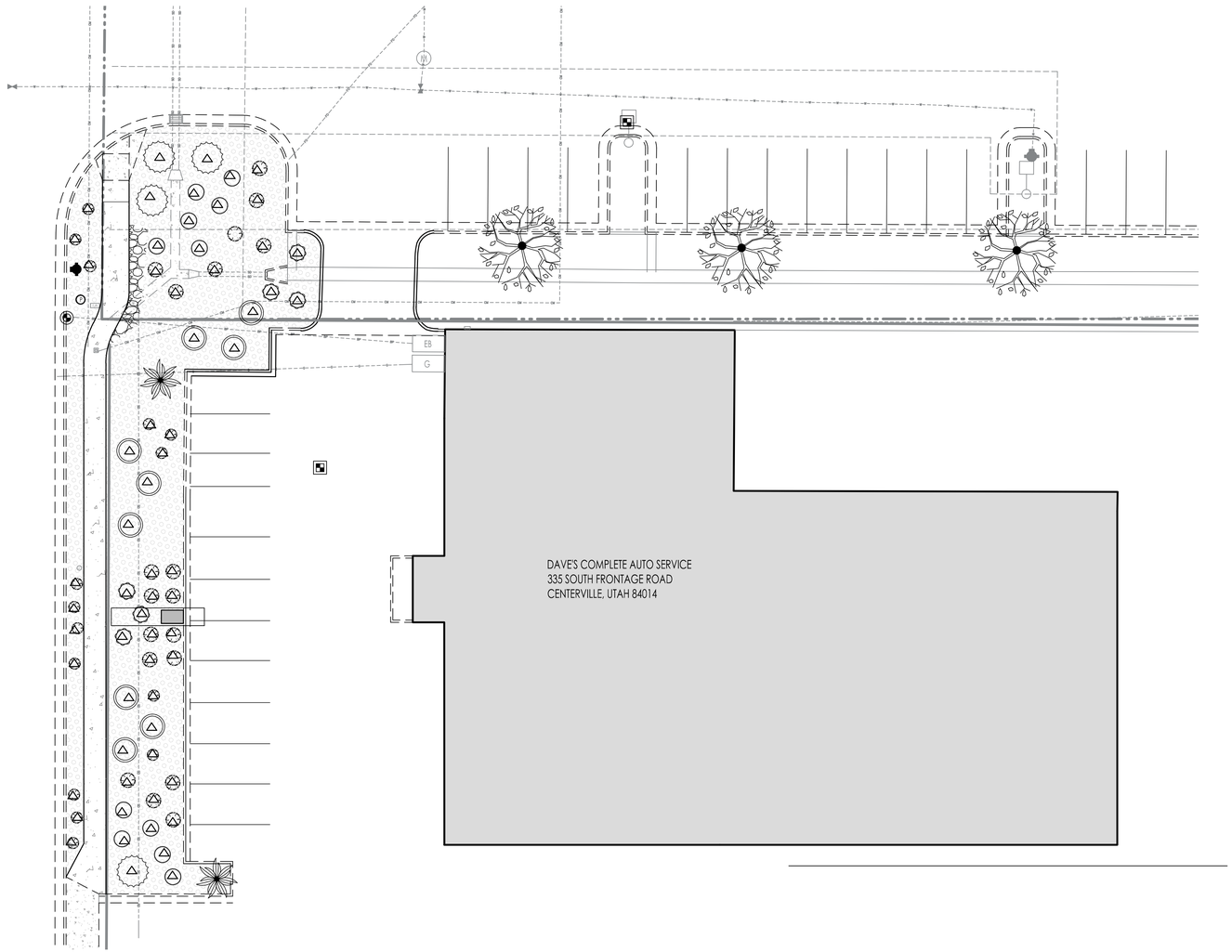

IRRIGATION SCHEDULE

SYMBOL	DESCRIPTION	MANUFACTURER	MODEL NUMBER	PSI	RADIUS	GPM	PRECIP.
△	PLANT DRIP EMITTER	HUNTER	(3) 0.5 GPH EACH SHRUBS (2) 0.5 GPH EACH PERENNIALS AND GRASSES				
⊕	AUTOMATIC VALVE	RAINBIRD XCZ-100 PRB	MEDIUM PLUS FLOW DRIP CONTROL KITS FOR COMMERCIAL APPLICATIONS. 1" BALL VALVE WITH 1" PESB VALVE AND 1" PRESSURE REGULATING 40 PSI QUICK-CHECK BASKET FILTER 3 GPM TO 20 GPM				

PVC PIPE SLEEVE & CONTROL WIRE SLEEVE LOCATION. SYMBOL MAY INDICATE MULTIPLE SLEEVES, HOWEVER THERE SHALL BE 1 PIPE PER SLEEVE. MINIMUM SIZE SHALL BE 2 TIMES THE PIPE SIZE. SLEEVES SHALL EXTEND A MINIMUM OF 3' INTO LANDSCAPED AREA.

MAIN PRESSURE LINE- 1" PVC SCHED. 40

LATERAL LINES- PVC SCHED. 40

IRRIGATION SYSTEM NOTES

1. WORK SHALL CONFORM WITH CENTERVILLE CITY STANDARDS AND SPECIFICATIONS UNLESS OTHERWISE NOTED IN THE PLANS.
2. THE CONTRACTOR SHALL BE RESPONSIBLE FOR ENSURING PROPER COVERAGE OF ALL IRRIGATED AREAS.
3. NO MAJOR REVISIONS IN THE DESIGN WILL BE ALLOWED WITHOUT WRITTEN APPROVAL FROM THE ARCHITECT & OWNER.
4. IT IS THE RESPONSIBILITY OF THE IRRIGATION CONTRACTOR TO FAMILIARIZE HIMSELF WITH ALL GRADES, LOCATION OF WALKS, STRUCTURES AND UTILITIES. THE CONTRACTOR SHALL REPAIR OR REPLACE ALL ITEMS DAMAGED BY HIS WORK. HE SHALL COORDINATE HIS WORK WITH OTHER CONTRACTORS FOR THE LOCATION AND INSTALLATION OF PIPE SLEEVES AND LATERAL LINES THROUGH WALLS, AND UNDER ROADWAYS AND PAVED AREAS. SLEEVES INSTALLED AT IMPROPER DEPTHS WILL HAVE TO BE RE-INSTALLED BY BORING METHODS.
5. DO NOT WILLFULLY INSTALL THE IRRIGATION AS SHOWN ON THE PLAN WHEN IT IS OBVIOUS IN THE FIELD THAT UNKNOWN OBSTRUCTIONS, DIFFERENCES IN GRADE AND AREA DIMENSIONS EXIST THAT MIGHT NOT HAVE BEEN CONSIDERED DURING THE INITIAL DESIGN PHASE. SUCH OBSTRUCTIONS OR DIFFERENCES SHOULD BE BROUGHT TO THE ATTENTION OF THE OWNERS REPRESENTATIVE. IN THE EVENT THIS NOTIFICATION IS NOT PERFORMED, THE CONTRACTOR SHALL ASSUME FULL RESPONSIBILITY FOR ANY REVISIONS OR CHANGE ORDERS.
6. THE IRRIGATION CONTRACTOR CONNECT WIRES FROM NEW VALVES TO EXISTING IRRIGATION CONTROLLER
7. THE IRRIGATION CONTRACTOR SHALL ADJUST VALVES, FLUSH AND ADJUST IRRIGATION HEADS FOR OPTIMUM COVERAGE WITH MINIMAL OVERSPRAY ONTO WALKS, STREETS AND WALLS.
8. THE OWNER RESERVES THE RIGHT TO REFUSE MATERIAL OR WORK WHICH DOES NOT CONFORM TO THESE DRAWINGS AND SPECIFICATIONS. REJECTED WORK SHALL BE REMOVED OR CORRECTED AS SOON AS POSSIBLE AT CONTRACTOR'S EXPENSE.
9. GUARANTEE: ALL WORK SHALL BE GUARANTEED (FOR ONE YEAR FROM DATE OF ACCEPTANCE) AGAINST ALL DEFECTS IN MATERIAL, EQUIPMENT AND WORKMANSHIP. GUARANTEE SHALL ALSO COVER REPAIR FOR DAMAGE TO ANY PART OF THE PREMISES RESULTING FROM LEAKS OR OTHER DEFECTS IN MATERIAL, EQUIPMENT OR WORKMANSHIP, TO THE SATISFACTION OF THE OWNER. REPAIRS, IF REQUIRED, SHALL BE DONE PROMPTLY AND AT NO COST TO THE OWNER.
10. IRRIGATION CONTRACTOR IS RESPONSIBLE FOR INSTALLING CONDUITS AND WIRING FROM VALVES TO CONTROLLERS.
11. THIS SPRINKLER PLAN IS DRAWN FOR GRAPHIC CLARITY WHERE PIPING, VALVES AND WIRING ARE SHOWN IN CONC. AND ASPHALT AREAS. EXCEPT WHERE CROSSING, THE INTENT IS FOR THE PIPING, VALVES AND WIRE TO BE PLACED IN THE ADJACENT PLANTING AREAS. NO VALVES SHALL BE PLACED WITHIN PLAYING FIELD FENCES. ALL VALVES SHALL BE LOCATED OUTSIDE PLAYING FIELD FENCES IN ADJACENT TURF AREAS.

NORTH

11"X17" 1" = 30'-0"
24"X36" 1" = 15'-0"

0 15' 30 45'

LANDCURVE
LANDSCAPE ARCHITECTURE
2846 Beverly Street
Salt Lake City, Utah 84106
P 801 209 1072
E reid.mitchell@gmail.com

2023-065

STATE OF UTAH
REID B. MITCHELL
Number 5301
LANDSCAPE ARCHITECT

STAMP

REVISIONS

Dave's Complete Auto
Miles Bell
Landscape Plan

335 S. Frontage Rd.
Centerville, Utah 84014

Irrigation Plan

SHEET NAME.

LA3

SHEET NO. 3 OF 3

DATE. 6/21/2023

AFTER RECORDING, PLEASE RETURN TO:
David J. Crapo
Crapo Deeds PLLC
106 W 500 S, Suite 100
Bountiful, Utah 84010

CROSS ACCESS EASEMENT AGREEMENT

This CROSS ACCESS EASEMENT AGREEMENT (the "**Agreement**") is made and effective as of July 11, 2023, between Miles Bell, LC, a Utah limited liability company ("**Miles**"), and Aiden Bell LC, a Utah limited liability company ("**Aiden**").

RECITALS

A. Whereas, Miles owns that certain lot with an address of 335 S Frontage Road, Centerville, Utah ("Lot 1") and Aiden owns that lot with an address of 285 S Frontage Road, Centerville, Utah ("Lot 2"), according to the official plat on file in the Davis County Recorder's Office;

B. Whereas, Miles and Aiden (collectively, the "Parties," and individually, a "Party") desire to create and grant an easement on, over, upon, and across portions of their respective properties (Lot 1 and Lot 2 and collectively the "Lots") for purposes of ingress/egress, cross access, and for all other uses expressly contemplated by this Agreement;

C. For good and valuable consideration, the receipt and sufficiency of which are acknowledged, the Parties agree that these reciprocal easements will be as set forth in the Exhibits or areas of similar size, use, and functionality, at the reasonable discretion of the owner of the servient estate, collectively referred to as the "Easement Areas."

AGREEMENT

1. Grant of Easement. The Parties, as the owners of Lot 1 and Lot 2, hereby expressly dedicate and subject each of the forgoing parcels of real property to this Agreement intending for

this Agreement to terminate once either Party transfers, sells, encumbers, or hypothecates their respective Lot.

The Parties hereby declare that each of Lot 1 and Lot 2 described above is held and shall be held, leased, rented, used, occupied, and improved subject to the following limitations, restrictions, and covenants., subject to the terms and conditions of this Agreement as follows:

The Security Wall Easement granted herein is referred to herein as the "Security Fence Easement" and the Ingress & Egress Easement granted herein is referred to herein as the "Ingress & Egress Easement" and collectively the "Easement Area." It is the intent of the Parties that the Easements are a nonexclusive easement and that each Party shall have full use of their respective Lots, business access, and parking stalls, driveways and throughways, and access for ingress and egress. As such, the following Easement is defined and created on the property comprising the Lots with physical and geographical locations more particularly described in Exhibit A and depicted on Exhibit B (Plat Map).

1.1 **Ingress & Egress Easement.** The Parties hereby grant and convey to each other a non-exclusive, mutual cross-access easement for purposes of vehicular and pedestrian ingress and egress on, over, upon, and across the area as described in the attached Exhibit A, and depicted on Exhibit B. Such shall include the right to require removal of any obstructions including structures, barricades, damaging items, and vegetation that might be placed thereon.

1.2 **Security Fence Easement.** The Parties hereby grant and convey to each other a non-exclusive, mutual easement for purposes of constructing, operating, and maintaining a security fence running north to south, as more particularly shown on Exhibit B, (the "**Security Fence**"). This Easement is granted for the purpose of maintaining a restricted area on Lot 2, and is to be construed in a manner to ensure that the restricted area is properly protected and maintained.

2. Termination. The Easements, including the terms and conditions of this Agreement shall be terminated once either Party transfers, sells, hypothecates, or encumbers, their respective Lot, or any portion thereof. The Easements may also be terminated by mutual written consent of Miles and Aiden.

3. Modification of Easements. Each Party will not unreasonably withhold consent to requests from the other Party for modifications or reconfigurations, including changes to the size, location and usage pattern, of the Easements, provided that such modification does not significantly reduce the purpose and functionality of such Easements or Lots 1 and 2. Said modification must be done in writing with the mutual consent of the Parties.

4. Reservation of Rights. Each Party reserves the right to use its own servient estate (Miles with respect to Lot 1 and Aiden with respect to Lot 2), including the Easement Areas located thereon, as it sees fit provided such use is not inconsistent with and does not materially interfere

with the other's (the dominant estate's) use of that Easement Areas, including the construction of improvements over, under, in, along, across, and upon the servient estate in the Easement Areas.

No walls, fences, or barriers of any kind shall be constructed or maintained on the Easement Area, or any portion thereof, by any Party which shall prevent or impair the use of exercise of any of the easements granted herein or the access and movement, including without limitation, pedestrians and vehicular traffic between the Lots; provided however, landscaping and reasonable traffic controls as may be necessary to guide and control an orderly flow of traffic may be installed so long as access driveways to the parking areas in the Easement Area are not closed or blocked. The only exception to this provision shall be (1) for changes to the Easement Areas permitted by this Agreement, (2) for incidental encroachments upon the Easement Areas which may occur as a result of the use of ladders, scaffolding, storefront barricade and similar facilities resulting in temporary obstruction of portions of the Easement Area, all of which are permitted hereunder so long as their use is kept within reasonable requirements of construction work being expeditiously pursued, (3) those barriers, walls, fences, or other blockages present in previously submitted documents for approval to cities, municipalities, and counties, and (4) those barriers, walls, fences, or other blockages necessary to restrict and restrain access to restricted areas and to the Parties respective Lots after business hours.

5. AS IS. Each Party acknowledges that it accepts the Easement on an AS IS WHERE IS basis, and that all warranties as to condition, location or fitness for particular use have been fully disclaimed. The Parties acknowledge that they have had a sufficient opportunity to conduct the necessary due diligence, including consulting with outside legal counsel, to assess the benefit, obligations, and legal effect of Easement and this Agreement.

6. Maintenance of Easement Areas & Security Fence. Each Party, at its sole cost and expense, shall maintain and keep the Easement Areas and the Security Fence, on each Party's respective Lot (i.e., the servient estate) in a commercially reasonable, serviceable, neat, and acceptable condition and state of repair. The other owner (i.e., the dominant estate) shall not be obligated to maintain, repair, or replace the servient estate Easement Areas.

7. Maintenance of Ingress & Egress Easement. The Parties shall keep the Ingress & Egress Area in a serviceable, neat, and acceptable manner, such that the overall appearance of the parking lots of each Party's Lot and the Ingress & Egress Area remain uniform. The Parties shall cooperate with each other in the performance of routine and necessary repairs, overlay, sealings, resurfacing, maintenance, and snow removal of each Lots parking lot and the Ingress & Egress Area. The Parties shall equally bear the costs of snow removal, resurfacing, and maintenance of the entire Ingress & Egress Area. If the Ingress & Egress Area requires maintenance, repair, sealing, or replacement each Party shall have the right to conduct or order such service and to then invoice the other Party for one half of all reasonable costs incurred therein. The Party being billed shall remit payment for such reasonable costs incurred within 30 days of receipt of the invoice.

8. Taxes. Each owner of the Lots expressly agrees to pay or cause to be paid, prior to delinquency, directly to the appropriate taxing authorities all real property taxes and other

assessments which are levied against any part or portion of the Easement Areas owned by each owner.

9. Mediation; Default. Prior to commencing suit or other legal proceeding, the Parties agree to submit any dispute to any mutually agreed mediation service for mediation by providing to the mediation service a joint, written request for mediation, setting forth the subject of the dispute and the relief requested. The Parties shall cooperate with one another in selecting a mediation service and shall cooperate with the mediation service and with one another in selecting a neutral mediator and in scheduling the mediation proceedings. The Parties covenant that they will use commercially reasonable efforts in participating in the mediation. The Parties agree that the mediator's fees and expenses and the costs incidental to the mediation will be shared equally between the Parties.

10. Amounts Due. The prevailing Party in any action to enforce this Agreement shall be entitled to all reasonably incurred attorney fees and costs. Any amounts owing pursuant to this Agreement shall accrue interest at 15% per annum if not paid within 30 days of receiving the applicable invoice. Any action to enforce this Agreement shall be governed by Utah law without consideration of conflicts of law principles. Venue shall reside in the county in which the subject property is located.

11. No Merger. The easements, covenants, restrictions and other provisions contained in this Agreement shall remain in full force and effect despite the Lots may be owned by the same person from time to time, it being the intention of the Parties to create a perpetual easement which will not be terminated by the doctrine of merger or otherwise, unless this Agreement is terminated by Agreement of the Parties in writing.

12. Notices. Any notice or demand to be given by any Party to any other Party shall be given in writing by personal service, express mail, Federal Express, DHL or any other similar form of courier or delivery service, or mailing in the United States mail, postage prepaid, certified and return receipt requested, and addressed to such Party at the address set forth for such Party in the Davis County taxing records or, if different, at another address provided by such Party. Any party may change the address at which it desires to receive notice on written notice of such change to the other Party. Any such notice shall be deemed to have been given, and shall be effective, on delivery to the notice address then applicable for the Party to which the notice is directed; provided, however, that refusal to accept delivery of a notice or the inability to deliver a notice because of an address change which was not property communicated shall not defeat or delay the giving of a notice.

13. Interpretation. This Agreement shall inure to the benefit of, and shall be binding on, the Parties and their respective successors and assigns. Any reference to a particular Party or Lot owner shall be interpreted to include all successors to such Party. Titles and headings of paragraphs of this Agreement are for convenience of reference only and shall not affect the construction of any provisions of this Agreement. This Agreement shall be governed by, and constructed and interpreted in accordance with, the laws (excluding the choice of laws rules) of the State of Utah. Whenever possible, each provision of this Agreement shall be interpreted in such manner as to be valid under applicable law; but, if any provision of this Agreement shall be invalid or prohibited under applicable law, such provision shall be ineffective to the extent of such invalidity or prohibition without invalidating the remainder of such provisions or the remaining

provisions of this Agreement. Except as otherwise provided in this Agreement, no remedy provided in this Agreement shall be exclusive of any other remedy at law or in equity (whether existing on or created after the date of this Agreement), and all remedies under this Agreement may be exercised concurrently, independently or successively from time to time. The failure on the part of any person to promptly enforce any right under this Agreement shall not operate as a waiver of such right, and the waiver of any default shall not constitute a waiver of any subsequent or other default.

14. Indemnification. The Parties indemnify, hold harmless, and agree to defend the other for, from and against all claims, damages, expenses, and liens (including, without limitation, attorneys' fees and reasonable investigative and discovery costs), liabilities and judgments on account of injury to persons, loss of life, or damage to property occurring on the accused Party's Lot, caused by the active or passive negligence of the accused Party, or the breach by the accused Party of any of its obligations; provided, however, this indemnification does not apply to the extent any loss of life, injury to any person, or damage to any property is caused by the active or passive negligence of the non-accused Party, or its respective agents, servants or employees.

15. No Partnership. The Parties do not by this Agreement, or for any purpose, become partners or joint venturers of each other in the conduct of their respective businesses or otherwise.

16. Counterparts. This Agreement may be executed in many counterpart originals, each of which will be deemed an original instrument for all purposes, but all of which will comprise the same instrument.

17. Representations and Warranties. Each Party represents and warrants to the other that it has the right to grant the Easement as set forth herein, that such grant does not violate any applicable law, contract, or company by-law, and that the person signing on behalf of its respective Party has the necessary authority, consent, and or company resolution to do so.

18. Entire Agreement. This Agreement constitutes the entire agreement between the Parties pertaining to the subjects contained in this Agreement. All prior and contemporaneous agreements, representations and understandings of the Parties, oral or written, pertaining to the subjects contained in this Agreement are superseded by and merged in this Agreement. No supplement, modification or amendment of this Agreement will be binding unless in writing and executed by each Party and recorded in the records of the Davis County Recorder.

[SIGNATURE PAGE FOLLOWS]

IN WITNESS WHEREOF, this Agreement has been made as of the first date set out above.

Miles Bell LC, a Utah limited liability company	Aiden Bell LC, a Utah limited liability company
By: _____	By: _____
Dave Bell, Member	Dave Bell, Member

STATE OF UTAH)
:SS
DAVIS COUNTY)

The foregoing instrument was acknowledged before me this _____ day of _____, 2023, by Dave Bell, the duly authorized Member of Miles Bell, LC, a Utah limited liability company, who acknowledged to me that Aiden Bell LC did execute this Agreement with duly obtained authority.

_____
NOTARY PUBLIC

STATE OF UTAH)
:SS
DAVIS COUNTY)

The foregoing instrument was acknowledged before me this _____ day of _____, 2023, by Dave Bell, the duly authorized Member of Aiden Bell, LC, a Utah limited liability company, who acknowledged to me that Aiden Bell LC did execute this Agreement with duly obtained authority.

_____
NOTARY PUBLIC

Exhibit A

CROSS-ACCESS EASEMENT

[*Exhibit A*]

Exhibit B

PLAT MAP

PLANNING COMMISSION

Staff Report

8/9/2023

Item No. 2.
Title: PUBLIC MEETING - Final Site Plan, 285 S. Frontage Rd. Aiden Bell LC - ADMINSTRATIVE DECISION
Initiated By: Applicant
Staff Representative: Cory Snyder, Community Development Director

SUBJECT:

RECOMMENDATION:

BACKGROUND:

ATTACHMENTS:

1. 08-09-2023 PC Staff Report - Final Site Plan Amendment, Aiden Bell LC Property
2. 2023-07-18 Aiden Bell LC FKA Les Schwab Civil Set
3. Landscape - Aiden Bell FKA Les Schwab (1)
4. 2023.07.18 - Cross Access Easement Agreement

CENTERVILLE CITY
COMMUNITY DEVELOPMENT DEPARTMENT

655 North 1250 West, Centerville, Utah 84014
(801) 292-8232

STAFF REPORT
AGENDA: ITEM 2

APPLICANT: **DAVE'S COMPLETE AUTO**
c/o DAVID BELL
335 SOUTH FRONTAGE ROAD
CENTERVILLE, UTAH 84014
(davescompleteauto@gmail.com)

PROPERTY: **285 SOUTH FRONTAGE ROAD** *(former Les Schwab Site)*

PROPERTY OWNER: **AIDEN BELL LC**
335 SOUTH FRONTAGE ROAD
CENTERVILLE, UTAH 84014

ACREAGE: **2.37 ACRES**

ZONING: **COMMERCIAL VERY-HIGH (C-VH)**

APPLICATIONS:

- **FINAL SITE PLAN APPROVAL**
  FOR AMENDING THE SITE LAYOUT BY INTERCONECTING TO ADJACENT PROPERTY (FORMER LES SCHWAB SITE), WITH MINOR PARKING, AND LANDSCAPING ALTERATIONS.

RECOMMENDATION: **CONSIDER FINAL SITE PLAN APPROVAL**

BACKGROUND

The applicant, Mr. David Bell, desires to create an interconnection of the existing site to the adjacent property to the north (*former Les Schwab Site*). The connections can be summarized as follows:

- Create two interconnecting access drives – one in front (*west*) and another in the back (*east*).
- Connect the two buildings with an 8-foot precast concrete style fence (west) and a secure chain-link style fence (*east side of adjoining site*) to create a common storage/parking area.
- Make several minor landscaping changes, as necessary to accomplish these interconnections.

PREVIOUS CONCEPTUAL SITE PLAN ACCEPTANCE

On July 12, 2023, the Planning Commission voted to ***ACCEPT*** *the Conceptual Site Plan for the proposed changes to site of the Dave's Complete Auto, located at [285] South Frontage Road, with the following directives:*

1. *The applicant shall submit a final site plan application meeting the standards found in CZC 12.21.110.e of the Zoning Ordinance.* **Completed**
2. *The Final Site Plan shall be substantially consistent with this Conceptual Site Plan submittal and related acceptance, which includes the following:*
    a. *Create two interconnecting access drives – one in front (west) and another in the back (east).* **Consistent with Conceptual**
    b. *Connect the two buildings with an 8-foot precast concrete style fence (west) and a secure open style fence (east side of this site) to create a common storage/parking area.* **Consistent with Conceptual**
    c. *At Final Site Plan submittal, the applicant may propose a fence height up to 10 feet along the west elevations, provided there is an engineering rational behind the request.* ***Final Site Plan Depicts 8-foot fence***
    d. *Make several minor landscaping changes, as necessary to accomplish these interconnections*. **Depicted**
3. *The final site plan submittal shall also address the following:*
    a. *Provide four (4) additional parking stalls to replace the four (4) stalls that are being eliminated in order to maintain original nonconforming parking stall count.* **Completed, however the related new drive isles between the properties eliminate more than four (4) stalls. It appears that a total of nine (9) will be eliminated. Consequently, these five (5) additional stalls will need to also be replaced.**
    b. *Submit final construction plans for the related modified storm water management system plan to be deemed acceptable by the City Engineer.* **Ongoing**
    c. *Prepare and submit the draft cross-access agreement for the proposed access drives and security fencing between this property and the site adjacent to the [south] (i.e. [Dave's Complete Auto])*. **Completed**
    d. *Submit for and receive from the City any related Building Permits for the proposed development.* **Ongoing**

PLANNING STAFF RECOMMENDATION

PROPOSED ACTION: "*I hereby make a motion for the Planning Commission to* ***APPROVE*** *the Final Site Plan, Amendments, for the proposed changes to site of the former Les Schwab Site, located at 285 South Frontage Road, with the following directives:*

1. *This Final Site Plan Approval shall be limited to the following:*
    a. *Create two interconnecting access drives – one in front (west) and another in the back (east).*
    b. *Connect the two buildings with an 8-foot precast concrete style fence (west) and a secure open style fence (east side of adjoining site) to create a common storage/parking area.*

*e. Since related new drive isles between the properties eliminate more than four (4) stalls. It appears that a total of nine (9) stalls will be eliminated. Consequently, these additional five (5) stalls shall also be replaced***,** *which shall be deemed acceptable by the Zoning Administrator. Any disputes regarding compliance shall be returned to the Planning Commission for their review and final approval.*

c. *Installation of the revised landscaping design, as submitted to the City with the Final Site Plan submittal.*

d. Final construction plans for the related modified storm water management system plan shall be deemed acceptable by the City Engineer

e. Recordation of the cross-access agreement for the proposed access drives and security fencing between this property and the site adjacent to the south (i.e. former Dave's Complete Auto), as deemed acceptable by the City Attorney.

f. Submit for and receive from the City any related Building Permits for the proposed development.

g. If any future changes and/or amendments shall be subject to the applicable regulations for Site Plan Approval.

SUGGESTED REASONS FOR THE ACTION:

a) The Planning Commission finds that, with the conditions imposed, the proposed amendments comply with CZC 12.21.110(f), Standards for Approval, as also reviewed in the related Planning Staff reports.

b) The Planning Commission finds that the existing site, as submitted, will not increase the degree of non-conformities with regards to site landscaping, screening, or other issues, as described in CZC 12.22.080 of the Zoning Ordinance.

c) The Planning Commission finds that the proposed increase in fence height to 8-feet is for security purposes and its design is aesthetically compatible with the existing buildings that are being connected to create the desired security area.

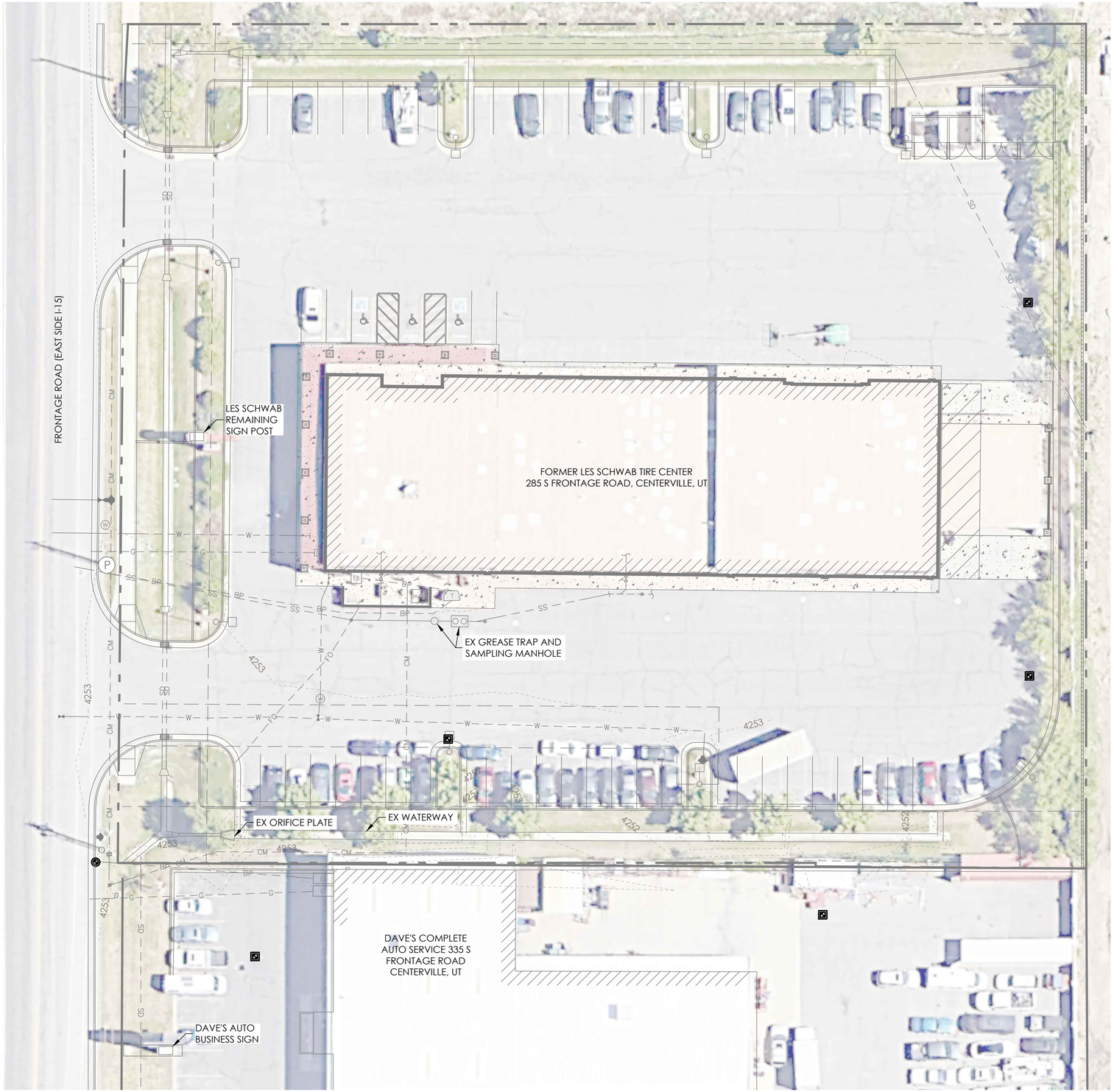

0 20 40 FT

EXISTING CONDITIONS LEGEND

- FOUND NAIL AND CONTROL POINT
- GATE, BOLLARD
- POWER, LIGHT POLE AND SIGNAL
- BUILDING COLUMN
- BAY DOOR
- ELECTRICAL UTILITY
- GAS METER/SIGN
- CULINARY WATER METER
- CULINARY HYDRANT, BUTTERFLY VALVE, GATE VALVE, AND GENERIC VALVE
- IRRIGATION BUTTERFLY VALVE, GATE VALVE, AND GENERIC VALVE
- UTILITY MANHOLE
- STORM DRAIN INLET BOX
- CONCRETE MASONRY WALL
- CURB AND GUTTER
- SANITARY SEWER
- STORM DRAIN
- CULINARY WATER
- GAS
- COMMUNICATIONS
- BURIED POWER
- FIBER OPTICS
- BUILDING
- LOT LINES
- EASEMENTS
- STRUCTURES
- 4200 MAJOR CONTOUR
- 4201 MINOR CONTOUR

SURVEY CONTROL TABLE

POINT #	PROJECT COORDINATES (MEAS.) NORTHING	EASTING	ELEVATION	DESCRIPTION
100	1532578.235	3492678.553	4252.581	CP 100 MAG
101	1532786.660	3492701.184	4252.876	CP 101 MAG
102	1532786.150	3492835.027	4252.894	CP 102 MAG A.T.
103	1532508.986	3492600.604	4253.098	CP 103 MAG A.T.
104	1532712.552	3492615.570	4253.757	CP 104 MAG A.T
40098	1532451.854	3492634.436	4252.871	FND NAIL IN TBC

LAND USE DATA

TOTAL AREA	103,237 SF
ROOF AREA	20,950 SF
PAVEMENT AREA	59,954 SF
LANDSCAPE AREA	22,693 SF

SHEET NOTES

1. THE ENGINEER HAS MADE AN EXTENSIVE EFFORT TO LOCATE ALL EXISTING UTILITY LINES FROM RECORDS PROVIDED BY OTHERS AND EVIDENCE IN THE FIELD. CONTRACTOR TO VERIFY ALL EXISTING UTILITY LOCATIONS PRIOR TO COMMENCING WORK.
2. PROTECT IN PLACE ALL EXISTING UTILITIES UNLESS OTHERWISE NOTED.
3. CALL BLUESTAKES BEFORE DIGGING 811

CONTACT INFORMATION

CRS Answers to Infrastructure® ENGINEERING & SURVEYING

4246 S RIVERBOAT RD., STE 200
SALT LAKE CITY, UT 84123
P: 801.359.5565

REVISIONS

LEGAL NOTICE

THE INFORMATION CONTAINED IN THIS DRAWING IS THE PROPERTY OF CRS CONSULTING ENGINEERS, INC. AND IS NOT TO BE REPRODUCED, MODIFIED, OR USED FOR ANY OTHER PROJECT OR EXTENSION OF THIS PROJECT EXCEPT BY AGREEMENT WITH CRS ENGINEERS.

DESIGN

REGISTERED PROFESSIONAL ENGINEER No. 181656 DOUGLAS CROMAR 07-18-23 STATE OF UTAH

PRINCIPAL : M. HIRST, PE
MANAGER: D CROMAR, PE
REVIEWER : D. CROMAR, PE
DRAFTER : A. MCFARLAND

PROJECT

2023-0103
18 JULY 2023

AIDEN BELL, LC FKA LES SCHWAB

285 S FRONTAGE RD, CENTERVILLE, UT 84014

EXISTING CONDITIONS AND DEMOLITION PLAN

1 OF 4

CS101

UT83-CF | 03:16 PM TUESDAY 18 JULY 2023 | P:\2023-0103 AIDEN BELL-DAVES COMPLETE AUTO IMPROV\DRAWINGS\SHEETS\CS101.DWG

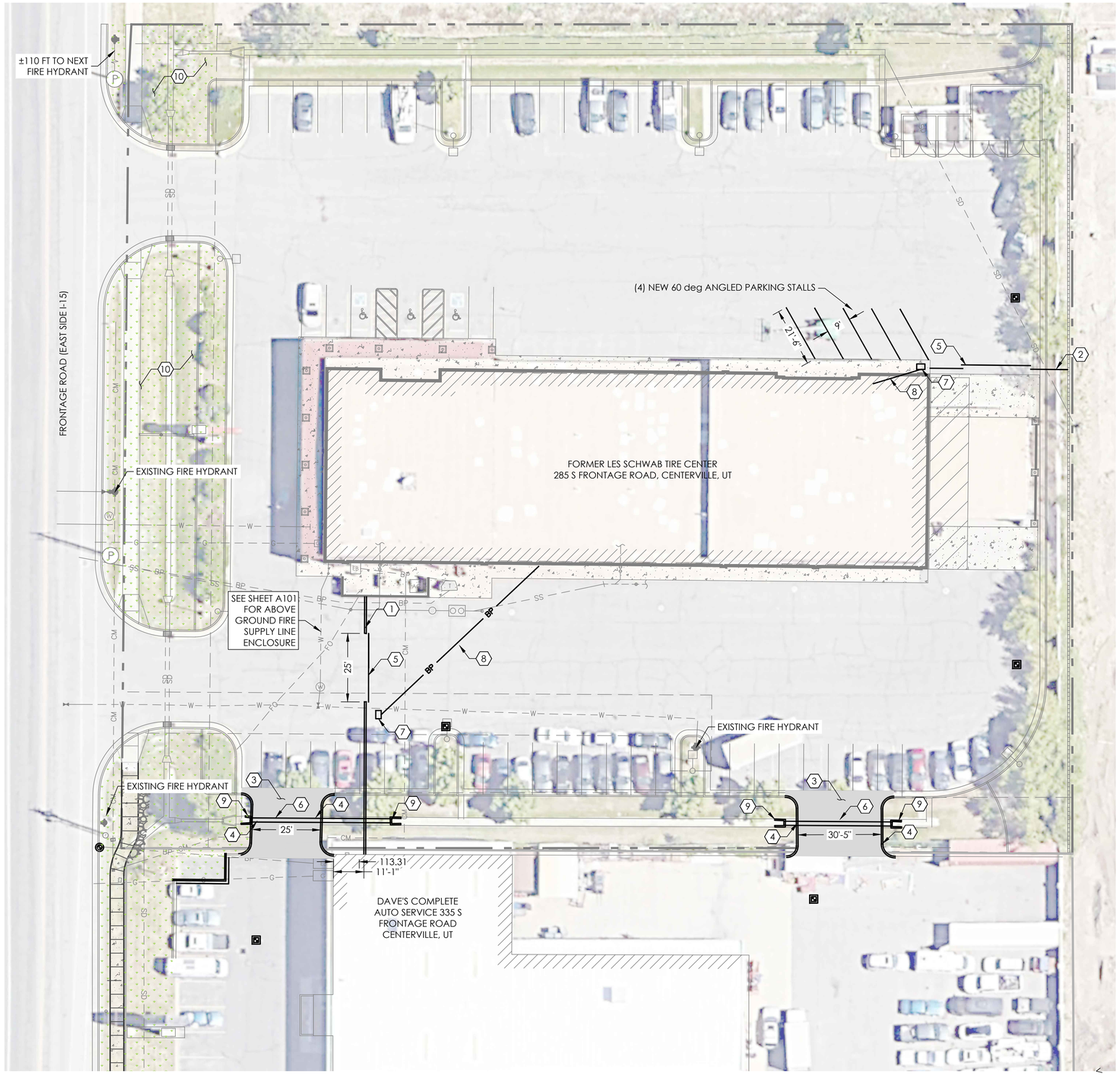

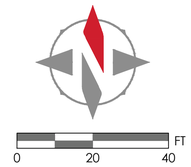

SITE PLAN LEGEND

EXISTING	PROPOSED	
		GATE, BOLLARD
		PAVEMENT STRIPING
		SIGN
		FENCE
		COLLECTING CURB & GUTTER
		SHEDDING CURB & GUTTER
		ASPHALT PAVEMENT
		CONCRETE PAVEMENT
		BUILDING
		PROPERTY LINES
		SAWCUT
		STRUCTURES
		LOT LINES

SITE KEYED NOTES

1. PROPOSED 8' MINIMUM CMU WALL. SEE ALL DETAILS CP502
2. PROPOSED 8' WROUGHT IRON FENCE PER DETAIL 3/CP501 & 5/CP501
3. PROPOSED ASPHALT CROSS ACCESS DRIVE. CUT CURB FOR NEW DRIVEWAY
4. PROPOSED 7" CURB WALL
5. PROPOSED WROUGHT IRON CANTILEVER GATE WITH KNOX SECURITY KEY BOX PER DETAIL 4/CP501
6. PROPOSED 18" ADS DRAIN CULVERT WITH HEAD WALLS
7. PROPOSED GATE MOTOR
8. PROPOSED ELECTRIC SERVICE TO GATE MOTOR
9. CONCRETE HEADWALL PER DETAIL 2/CP501
10. NEW FRONTAGE LANDSCAPE - SEE LANDSCAPE PLANS BY LANDCURVE DESIGN

SHEET NOTES

1. THE ENGINEER HAS MADE AN EXTENSIVE EFFORT TO LOCATE ALL EXISTING UTILITY LINES FROM RECORDS PROVIDED BY OTHERS AND EVIDENCE IN THE FIELD. CONTRACTOR TO VERIFY ALL EXISTING UTILITY LOCATIONS PRIOR TO COMMENCING WORK.

CONTACT INFORMATION

CRS Answers to Infrastructure® ENGINEERING & SURVEYING

4246 S RIVERBOAT RD., STE 200
SALT LAKE CITY, UT 84123
P: 801.359.5565

REVISIONS

LEGAL NOTICE

THE INFORMATION CONTAINED IN THIS DRAWING IS THE PROPERTY OF CRS CONSULTING ENGINEERS, INC. AND IS NOT TO BE REPRODUCED, MODIFIED, OR USED FOR ANY OTHER PROJECT OR EXTENSION OF THIS PROJECT EXCEPT BY AGREEMENT WITH CRS ENGINEERS.

DESIGN

LICENSED PROFESSIONAL ENGINEER No. 181650 DOUGLAS R CROMAR 07-18-23 STATE OF UTAH

PRINCIPAL : M. HIRST, PE
MANAGER: D CROMAR, PE
REVIEWER : D. CROMAR, PE
DRAFTER : A. MCFARLAND

PROJECT

2023-0103
18 JULY 2023

AIDEN BELL, LC FKA LES SCHWAB

285 S FRONTAGE RD, CENTERVILLE, UT 84014

SITE PLAN | 2 OF 4 | CP101

---- | 03:16 PM TUESDAY 18 JULY 2023 | P:\2023-0103 AIDEN BELL-DAVES COMPLETE AUTO IMPROV\DRAWINGS\SHEETS\CP101.DWG

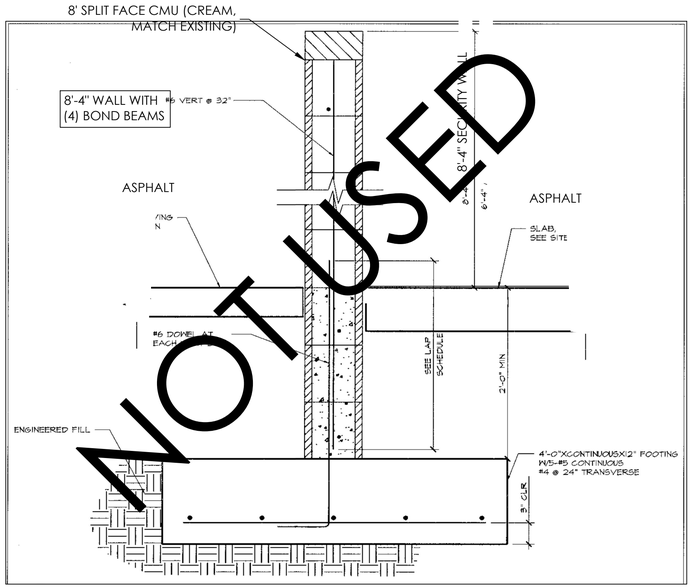

1 **8' CMU WALL**
NOT TO SCALE

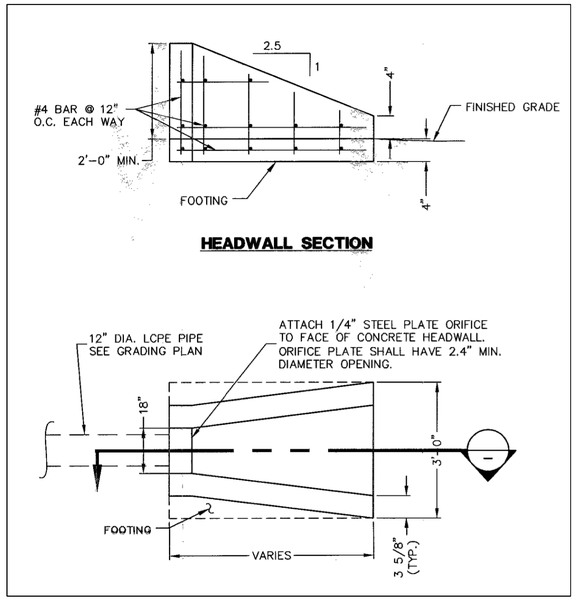

2 **CONCRETE HEADWALL**
NOT TO SCALE

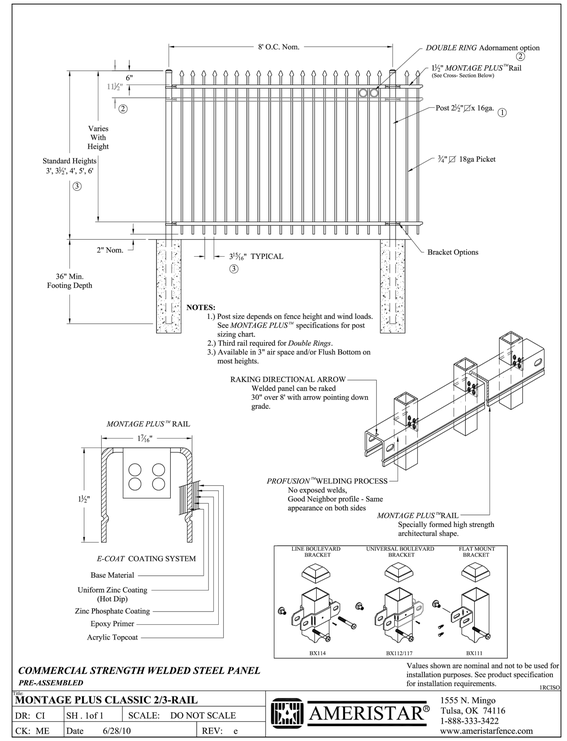

3 **WROUGHT IRON FENCE**
NOT TO SCALE

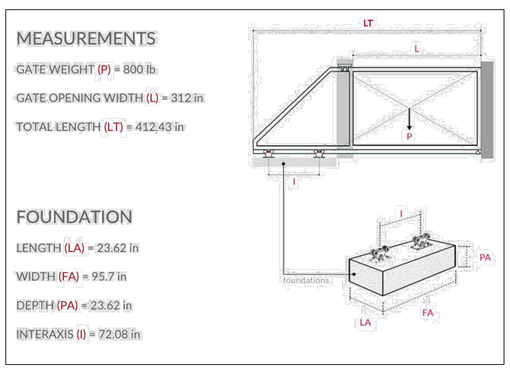

4 **CANTILEVER GATE**
NOT TO SCALE

CLASSIC™

- *8' Height*
- *2-Rail or 3-Rail Panels*
- *Extended Picket or Flush Bottom Panels*
- *4" Standard or 3" Pet, Pool & Play Picket Air-Space*

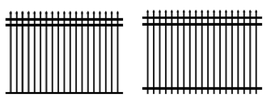

5 **WROUGHT IRON FENCE DESIGN**
NOT TO SCALE

CONTACT INFORMATION

Answers to Infrastructure®
ENGINEERING & SURVEYING

4246 S RIVERBOAT RD., STE 200
SALT LAKE CITY, UT 84123
P: 801.359.5565

REVISIONS

LEGAL NOTICE

THE INFORMATION CONTAINED IN THIS DRAWING IS THE PROPERTY OF CRS CONSULTING ENGINEERS, INC. AND IS NOT TO BE REPRODUCED, MODIFIED, OR USED FOR ANY OTHER PROJECT OR EXTENSION OF THIS PROJECT EXCEPT BY AGREEMENT WITH CRS ENGINEERS.

DESIGN

REGISTERED PROFESSIONAL ENGINEER No. 181650 DOUGLAS CROMAR 07-18-23 STATE OF UTAH

PRINCIPAL : M. HIRST, PE
MANAGER: D CROMAR, PE
REVIEWER : D. CROMAR, PE
DRAFTER : A. MCFARLAND

PROJECT

2023-0103
18 JULY 2023

AIDEN BELL, LC FKA LES SCHWAB

285 S FRONTAGE RD, CENTERVILLE, UT 84014

DETAILS | 3 OF 4 | CP501

---- | 03:16 PM TUESDAY 18 JULY 2023 | P:\2023-0103 AIDEN BELL-DAVES COMPLETE AUTO IMPROV\DRAWINGS\SHEETS\CP501.DWG

NOTES:
1. CONCRETE IS TO REACH A 28 DAY COMPRESSIVE STRENGTH OF 3000 PSI
2. GROUT F'c IS TO BE 1500 PSI
3. GROUT ALL CELLS CONTAINING REINFORCEMENT
4. FOOTINGS ARE TO BE PLACED ON UNDISTURBED NATURAL SOIL OR ON ENGINEERED FILL COMPACTED TO 95% M.D.D. (ASTM 1557).
5. REINFORCEMENT IS TO BE GRADE 60 BILLET STEEL.

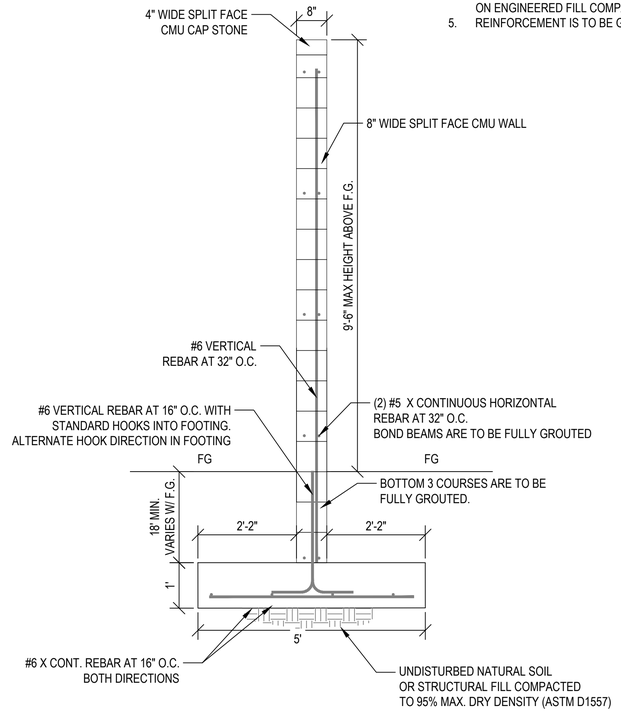

1 8' CMU WALL
NOT TO SCALE

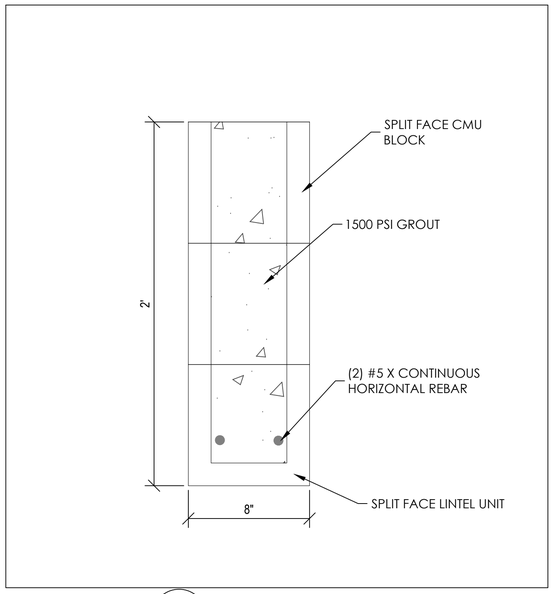

2 CMU LINTEL
NOT TO SCALE

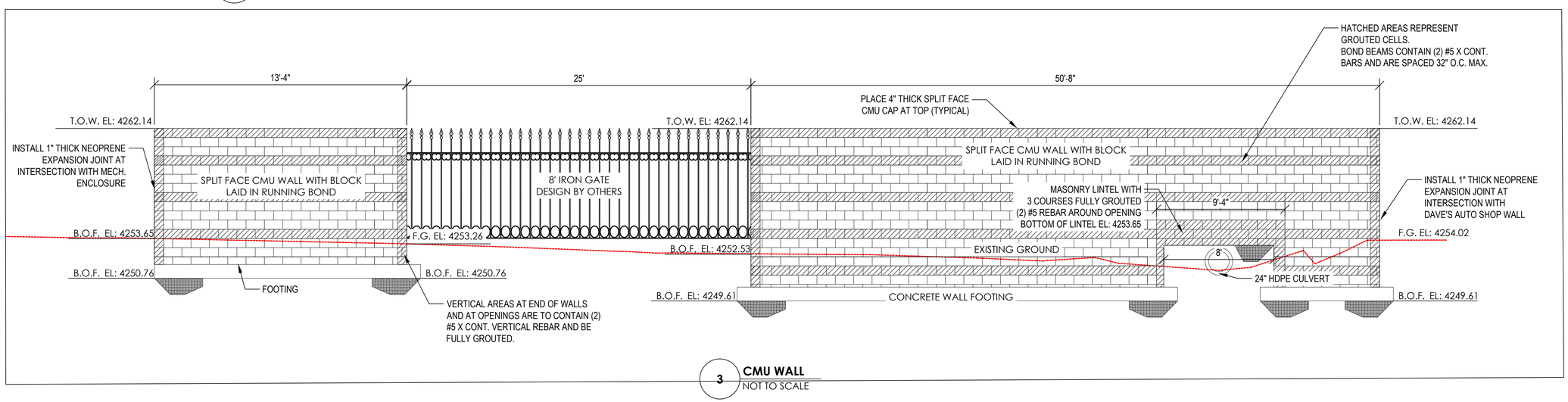

3 CMU WALL
NOT TO SCALE

CONTACT INFORMATION

Answers to Infrastructure®
ENGINEERING & SURVEYING

4246 S RIVERBOAT RD., STE 200
SALT LAKE CITY, UT 84123
P: 801.359.5565

REVISIONS

LEGAL NOTICE

THE INFORMATION CONTAINED IN THIS DRAWING IS THE PROPERTY OF CRS CONSULTING ENGINEERS, INC. AND IS NOT TO BE REPRODUCED, MODIFIED, OR USED FOR ANY OTHER PROJECT OR EXTENSION OF THIS PROJECT EXCEPT BY AGREEMENT WITH CRS ENGINEERS.

DESIGN

PROFESSIONAL ENGINEER No. 7558023 CRAIG S. NEBEKER 22-JUN-2023 STATE OF UTAH

PRINCIPAL : M. HIRST, PE
MANAGER: D CROMAR, PE
REVIEWER : D. CROMAR, PE
DRAFTER : A. MCFARLAND

PROJECT

2023-0103
22 JUNE 2023

AIDEN BELL, LC FKA LES SCHWAB

285 S FRONTAGE RD, CENTERVILLE, UT 84014

WALL DETAILS

4 OF 4

CP502

---- | 04:32 PM THURSDAY 22 JUNE 2023 | P:\2023-0103 AIDEN BELL-DAVES COMPLETE AUTO IMPROV\DRAWINGS\SHEETS\CP501.DWG

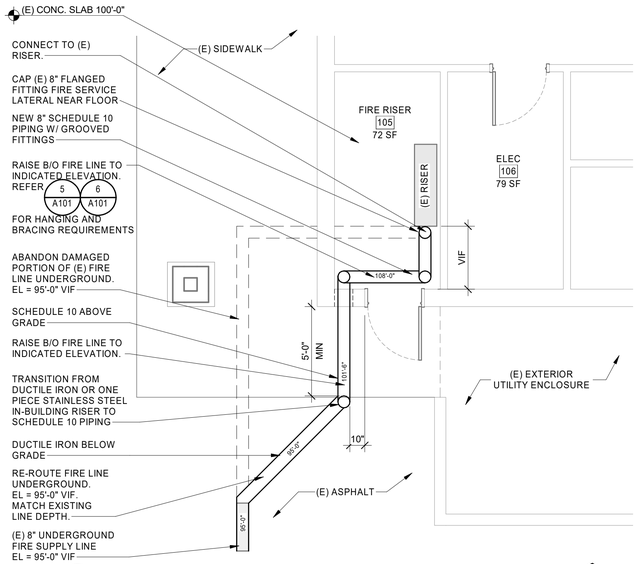

1 A101 FIRE SERVICE LINE PLAN

1/4" = 1'-0"

NORTH REF

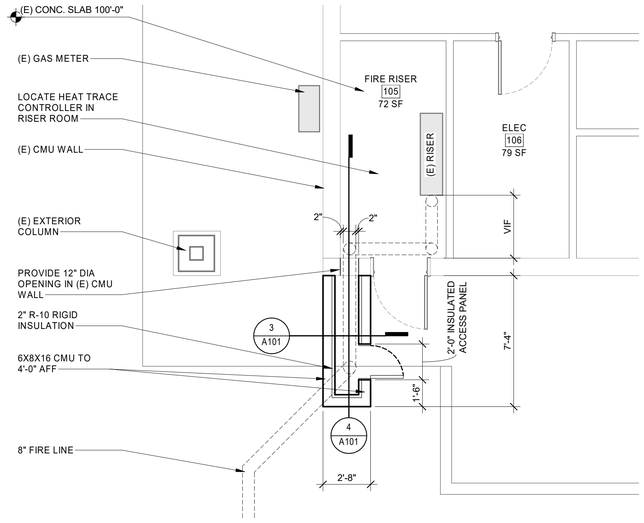

2 A101 FIRE LINE ENCLOSURE PLAN

1/4" = 1'-0"

NORTH REF

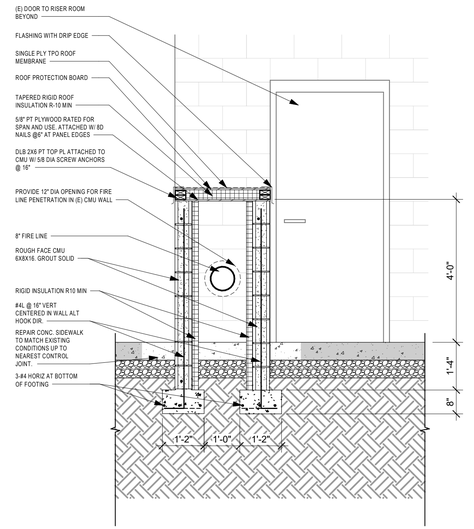

3 A101 ENCLOSURE SECTION EAST/WEST

1/2" = 1'-0"

SCOPE OF WORK

1. RE-ROUTE 8" FIRE LINE TO EXISTING RISER FOR FIRE LINE REPAIR. EXISTING FIRE LINE AT PROPERTY EXPERIENCED A LEAK AND THE WATER HAS BEEN SHUT OFF TO AVOID FURTHER ISSUES. ATTEMPTS TO REPAIR LINE AT EXISTING LOCATION WILL UNDERMINE EXISTING FOOTINGS NEAR THE FIRE LINE. SCOPE OF WORK INCLUDES RELOCATING LINE TO ENTER AT THE SOUTH SIDE OF THE FIRE RISER ROOM, PROVIDE AN EXTERIOR CHASE FOR THE FIRE LINE, PROVIDE A MONITORED HEAT TRACE SYSTEM FOR THE FIRE LINE, AND RE-ROUTE THE FIRE LINE THROUGH THE CHASE AND THROUGH THE EXISTING WALL TO AVOID UNDERMINING THE EXISTING FOOTINGS.

GENERAL NOTES

A. DO NOT SCALE THESE DRAWINGS FOR CONSTRUCTION PURPOSES
B. IN THE EVENT OF AN OMITTED NECESSARY DIMENSION, NOTIFY THE ARCHITECT OR ENGINEER
C. VERIFY ALL DIMENSIONS, CONDITIONS, AND GRADES AT JOB SITE PRIOR TO COMMENCING WORK
D. PAINT CMU ENCLOSURE WHITE TO MATCH ADJACENT CMU COLOR.
E. DESIGN AND INSTALLATION SHALL CONFORM TO NFPA 13, 2016 EDITION, LOCAL FIRE AND BUILDING DEPARTMENTS.
F. THE SPRINKLER SYSTEM SHOWN IS CONCEPTUAL ONLY. THE CONTRACTOR SHALL PROVIDE A COMPLETE SPRINKLER SYSTEM SHOWING ALL REQUIRED PIPING, OFFSETS, SPRINKLERS, RISERS AND DROPS.
G. CONTRACTOR SHALL SECURE ALL PERMITS AND PAY ALL FEES REQUIRED BY THE LOCAL AUTHORITY HAVING JURISDICTION AND BUILDING DEPARTMENTS.
H. PROVIDE ALL MATERIALS AND EQUIPMENT AND PERFORM ALL LABOR REQUIRED TO INSTALL COMPLETE AND OPERABLE FIRE PROTECTION SYSTEMS AS INDICATED ON THE DRAWINGS, AS SPECIFIED AND COMPLYING WITH THE STANDARDS OF THE NATIONAL FIRE PROTECTION ASSOCIATION, AND ALL STATE AND LOCAL REGULATIONS.
I. APPROVAL OF THE COMPLETE SYSTEM SHALL BE OBTAINED FROM THE AUTHORITIES HAVING JURISDICTION, AND A COPY OF SAME SHALL BE DELIVERED TO THE OWNER'S REPRESENTATIVE FOR DELIVERY TO THE OWNER.
J. RESTORE ALL DEVICES, FINISHES, ETC. DAMAGED OR ALTERED DURING CONSTRUCTION TO AN ACCEPTABLE CONDITION AS DETERMINED BY THE OWNER, ARCHITECT AND/OR ENGINEER.
K. CONTRACTOR SHALL SCHEDULE ALL SHUTDOWNS THAT AFFECT UTILITIES AND PORTIONS OF THE BUILDING THAT MUST REMAIN IN OPERATION WITH THE OWNER.
L. ISOLATE, DRAIN AND REFILL EXISTING PIPING SYSTEM AS REQUIRED TO ACCOMMODATE INSTALLATION OF NEW WORK.
M. HANGER INSTALLATION AND SPACING SHALL BE IN ACCORDANCE WITH NFPA 13.
N. CONTRACTOR SHALL BE RESPONSIBLE FOR ALL CORING AND DRILLING AS REQUIRED.
O. SPRINKLER CONTRACTOR TO COORDINATE WITH OTHER TRADES TO PREVENT CONFLICT WITH OTHER BUILDING SYSTEMS. ANY INSTALLATION WITHOUT PRIOR COORDINATION IS SUBJECT TO REMOVAL AND REINSTALLATION AT THE INSTALLING CONTRACTOR'S EXPENSE.

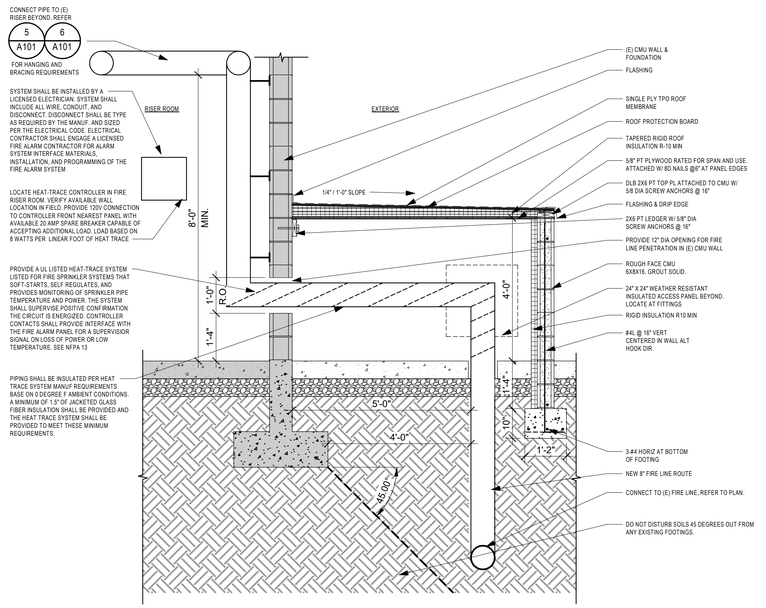

4 A101 ENCLOSURE SECTION NORTH/SOUTH

1/2" = 1'-0"

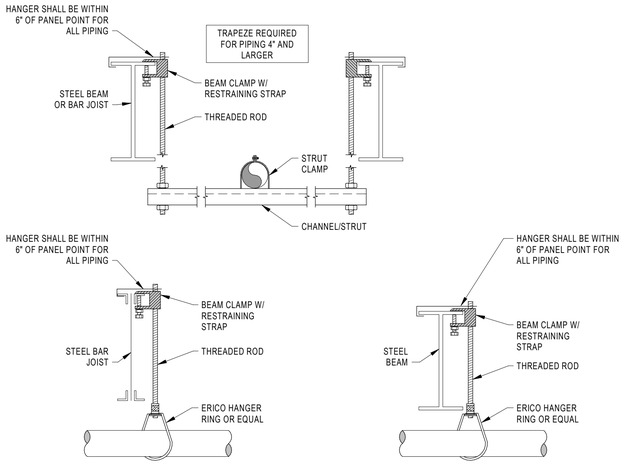

NOTES:
1. UNSUPPORTED LENGTHS BETWEEN THE END SPRINKLER ON A BRANCH AND THE LAST HANGER SHALL NOT BE GREATER THAN 12".
2. THE LENGTH OF AN UNSUPPORTED ARM OVER MUST NOT BE GREATER THAN 12".
3. ALL HANGERS LOCATED WITHIN 12" OF THE LAST SPRINKLER ON A BRANCH LINE OR ARMOVER MUST BE FITTED WITH A
4. SURGE SUPPRESSOR OR EQUIVALENT. CLAMP OR HANGER LOCATION WITHIN 6" OF STRUCTURAL PANEL POINTS.

MAXIMUM PIPE/TUBING SUPPORT SPACING, FEET										
NOM. SIZE	THRU 3/4"	1"	1-1/4"	1-1/2"	2"	2-1/2"	3"	4"	6"	8"
STEEL	N.A.	12	12	15	15	15	15	12	6	6

5 A101 FIRE SPRINKLER PIPE HANGER DETAILS

1/8" = 1'-0"

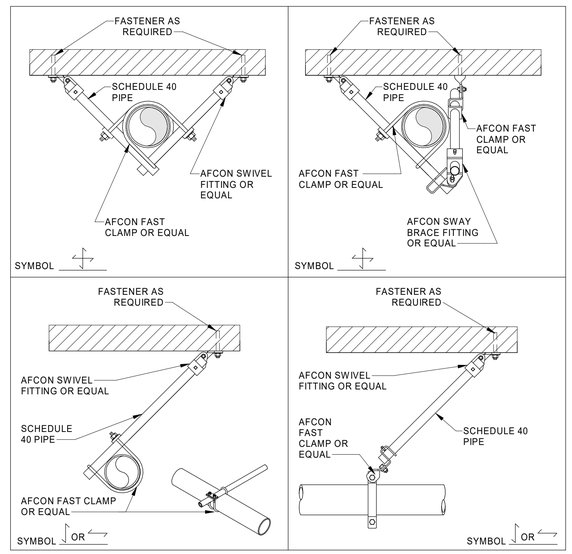

NOTE: ALL BRACE PIPING SHALL BE SCHEDULE 40

6 A101 SWAY BRACING DETAIL

1/8" = 1'-0"

Cushing Terrell.

cushingterrell.com
800.757.9522

155 SOUTH FRONTAGE ROAD, CENTERVILLE, UT

FIRE SUPPLY LINE REPAIR

STATE OF UTAH
CORY EUGENE CHESTNUT
10246367-5301
LICENSED ARCHITECT

© 2023 | ALL RIGHTS RESERVED

PERMIT ISSUE

03.15.2023
PROJ# | CENTERVILLE

REVISIONS

FIRE LINE REPAIR
PLANS & SECTIONS

A101

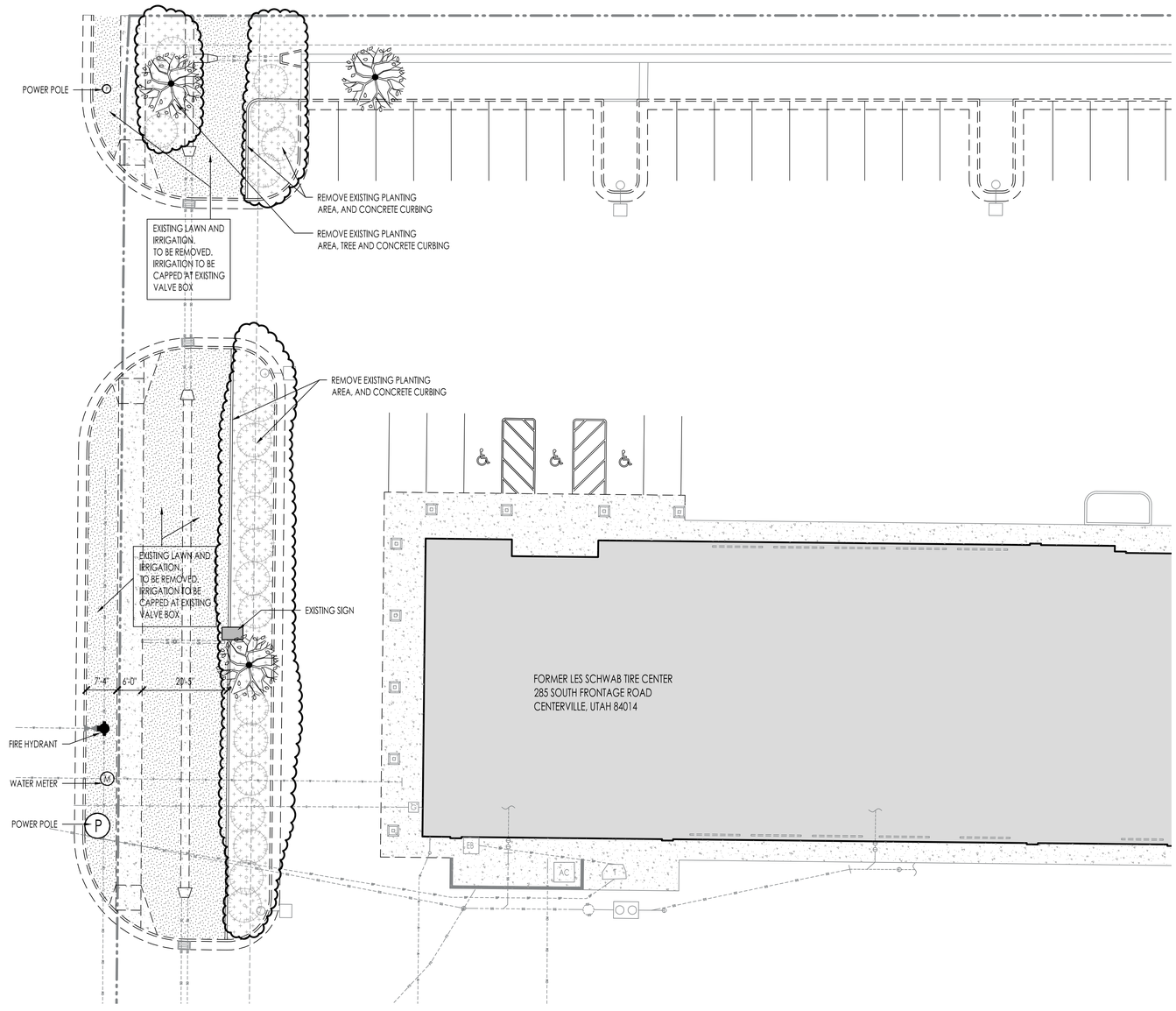

Landscape Tabulations

EXISTING LAWN AREA TO BE REMOVED 4,167 S.F.

EXISTING PLANTING AREA TO BE REMOVED 2,060 S.F.

TOTAL LANDSCAPE AREA TO BE REMOVED AND REPLACED. SEE NEW LANDSCAPE PLANS 6,227 S.F.

DEMOLITION NOTES

1. CONTRACTOR SHALL BE RESPONSIBLE FOR BECOMING AWARE OR ALL RELATED EXISTING CONDITIONS, UTILITIES, PIPES, AND STRUCTURES, ETC. PRIOR TO BIDDING AND CONSTRUCTION. THE CONTRACTOR SHALL BE RESPONSIBLE FOR CONTACTING ALL UTILITY COMPANIES FOR FIELD LOCATION OF ALL UNDERGROUND UTILITY LINES, INCLUDING DEPTHS, PRIOR TO ANY EXCAVATION. CONTRACTOR SHALL TAKE SOLE RESPONSIBILITY FOR ANY AND ALL COST OR OTHER LIABILITIES INCURRED DUE TO DAMAGE OF SAID UTILITIES/ STRUCTRES/ETC.
2. IF CONFLICTS ARISE BETWEEN SIZE OF AREAS AND PLANS, CONTRACTOR IS REQUIRED TO CONTACT OWNER FOR RESOLUTION. FAILURE TO MAKE SUCH CONFLICTS KNOWN TO THE OWNER WILL RESULT IN CONTRACTORS LIABILITY TO RELOCATE THE MATERIALS.
3. CONTRACTOR SHALL MEET ALL CITY AND OR COUNTY BUILDING STANDARDS.
4. CONTRACTOR SHALL ENSURE THAT ALL NEW GRADES SHALL SLOPE AWAY FROM HOUSE AT MIN. 2%
5. CONTACT BLUE STAKES TO MARK EXISTING UTILITIES PRIOR TO CONSTRUCTION.

TREE REMOVAL NOTES

1. CONTRACTOR SHALL WORK WITH HOMEOWNER TO TAG AND REMOVE ANY TREE THAT MAY NEED TO BE REMOVED BUT ARE NOT NOTED ON PLAN

NORTH

11"X17" 1" = 30'-0"
24"X36" 1" = 15'-0"

0 15' 30 45'

LANDCURVE
LANDSCAPE ARCHITECTURE
2846 Beverly Street
Salt Lake City, Utah 84106
P 801 209 1072
E reid.mitchell@gmail.com

2023-065

STATE OF UTAH
REID B. MITCHELL
Number 6014-5301
LANDSCAPE ARCHITECT

STAMP

REVISIONS

FKA Les Schwab
Aiden Bell
Landscape Plan

285 S. Frontage Rd.
Centerville, Utah 84014

Landscape Demolition Plan

SHEET NAME.

LA1

SHEET NO. 1 OF 3

DATE. 6/21/2023

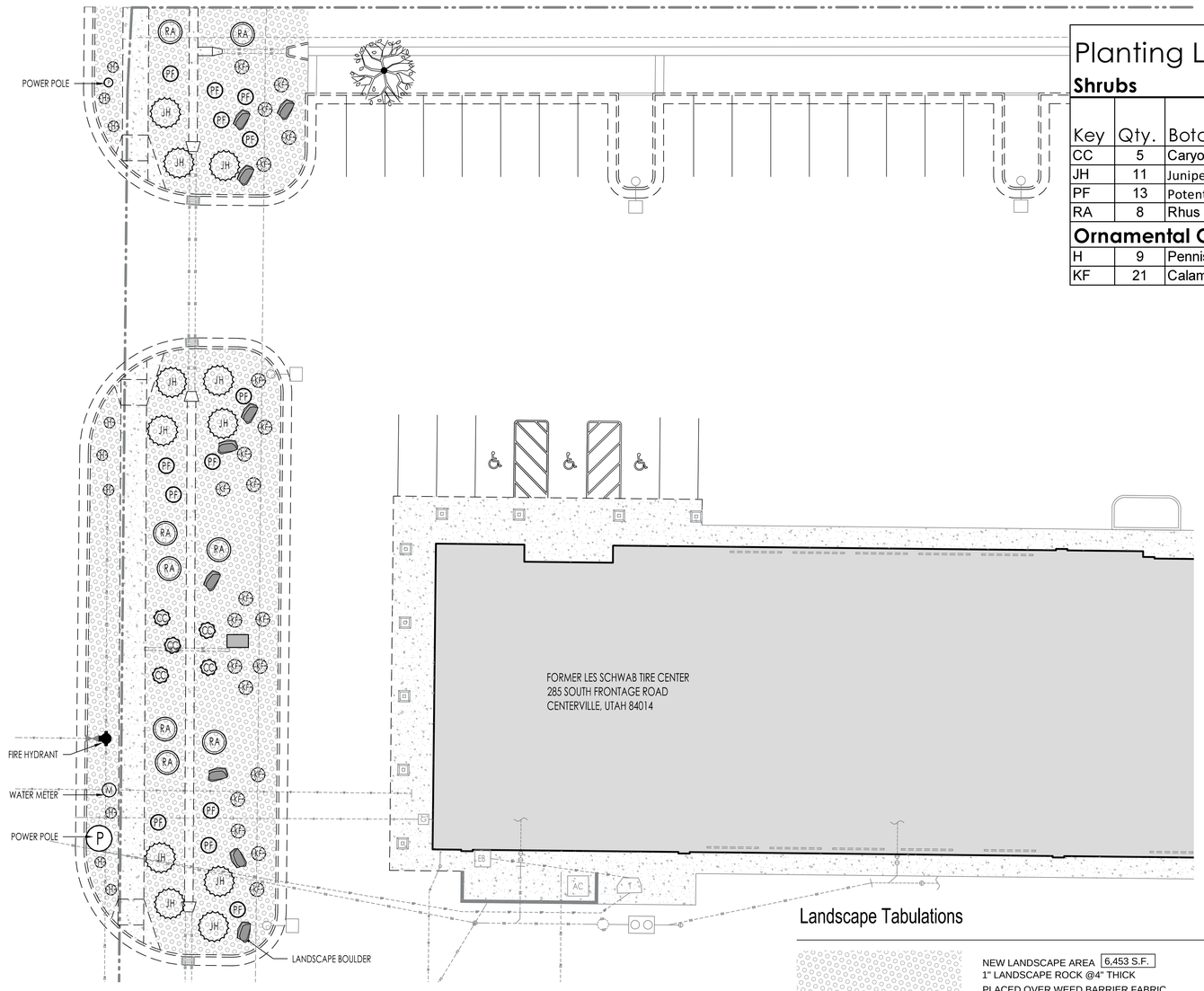

Planting Legend

Shrubs

Key	Qty.	Botanical Name	Common Name	Drought Tollerant	Size	H	W
CC	5	Caryopteris x clandonensis	blauer splatz bluebeard	**yes**	5 GAL.	2'	3'
JH	11	Juniperus communis 'Green Carpet'	Creeping Juniper	**yes**	5 GAL.	2'	6'
PF	13	Potentilla fruticosa 'Gold Drop'	Yellow Shrubby Cinquefoil	**yes**	5 GAL.	3'	3'
RA	8	Rhus Aromatica 'gro-low	gro low sumac	**yes**	5 GAL.	2'	5'
Ornamental Grasses							
H	9	Pennisetum 'Hameln'	Dwarf Fountain Grass	**yes**	2 GAL.	36"	24"
KF	21	Calamagrostis 'karl foerster'	feather reed grass	**yes**	2 GAL.	48"	36"

GENERAL NOTES

1. PLANT NAMES MAY BE ABBREVIATED ON THE DRAWINGS. SEE PLANT LEGEND FOR ABBREVIATIONS, BOTANICAL NAMES, SIZES, ESTIMATED QUANTITIES (IF GIVEN) AND OTHER REMARKS.
2. IT IS THE CONTRACTOR'S RESPONSIBILITY TO FURNISH ALL PLANT MATERIALS FREE OF PESTS OR PLANT DISEASES. PRE-SELECTED OR "TAGGED" MATERIAL MUST BE INSPECTED BY THE CONTRACTOR AND CERTIFIED PEST AND DISEASE FREE. IT IS THE CONTRACTOR'S OBLIGATION TO MAINTAIN AND WARRANTY ALL PLANT MATERIALS PER THE SPECIFICATIONS. ALL PLANTS SHALL BE SUBJECT TO OWNER'S APPROVAL PRIOR TO INSTALLATION.
3. PROVIDE MATCHING SIZES AND FORMS FOR EACH SPECIES OF TREES AND PLANTS INSTALLED GRID OR SPACED EQUALLY IN ROWS AS SHOWN ON DRAWINGS. ADJUST SPACING (EQUAL TO EQUAL) AS NECESSARY, SUBJECT TO ACCEPTANCE BY THE OWNERS REPRESENTATIVE.
4. THE LANDSCAPE CONTRACTOR SHALL TAKE ALL NECESSARY SCHEDULING AND OTHER PRECAUTIONS TO AVOID WINTER, CLIMATIC, WILDLIFE, OR OTHER DAMAGE TO PLANTS. THE CONTRACTOR SHALL INSTALL THE APPROPRIATE PLANTS AT APPROPRIATE TIME TO GUARANTEE LIFE OF PLANTS FOR 12 MONTHS AFTER INSTALLATION.
5. INSTALL LANDSCAPE ROCK AND WEED BARRIER CLOTH AS NOTED ON PLANS AND DETAILS.
6. CONTRACTOR SHALL GUARANTEE ALL LANDSCAPE WORK FOR 1 YEAR FROM SUBSTANTIAL COMPLETION
7. BACK FILL WITH TOPSOIL AS SHOWN ON PLANTING DETAILS. TOPSOIL MATERIAL IS NOT AVAILABLE AT THE SITE AND MUST BE IMPORTED FROM A LOCAL SOURCE. ALL TOPSOIL SHALL BE OF A RICH SANDY LOAM MIX.
8. ALL PLANT MATERIAL HOLES SHALL BE DUG TWICE THE DIAMETER OF THE ROOTBALL AND 6 INCHES DEEPER. EXCAVATED MATERIAL SHALL BE REMOVED FROM THE SITE.
9. PLANT BACKFILL MIXTURE SHALL BE COMPOSED OF 3 PARTS TOPSOIL TO 1 PART HUMUS ADDITIVE, AND SHALL BE ROTARY MIXED ON-SITE PRIOR TO INSTALLATION.
10. CONTRACTOR SHALL BE RESPONSIBLE FOR BECOMING AWARE OR ALL RELATED EXISTING CONDITIONS, UTILITIES, PIPES, AND STRUCTURES, ETC. PRIOR TO BIDDING AND CONSTRUCTION. THE CONTRACTOR SHALL BE RESPONSIBLE FOR CONTACTING ALL UTILITY COMPANIES FOR FIELD LOCATION OF ALL UNDERGROUND UTILITY LINES, INCLUDING DEPTHS, PRIOR TO ANY EXCAVATION. CONTRACTOR SHALL TAKE SOLE RESPONSIBILITY FOR ANY AND ALL COST OR OTHER LIABILITIES INCURRED DUE TO DAMAGE OF SAID UTILITIES/ STRUCTRES/ETC.
11. IF CONFLICTS ARISE BETWEEN SIZE OF AREAS AND PLANS, CONTRACTOR IS REQUIRED TO CONTACT OWNER FOR RESOLUTION. FAILURE TO MAKE SUCH CONFLICTS KNOWN TO THE OWNER WILL RESULT IN CONTRACTORS LIABILITY TO RELOCATE THE MATERIALS.
12. CONTRACTOR SHALL MEET ALL CITY AND OR COUNTY BUILDING STANDARDS.
13. CONTRACTOR SHALL ENSURE THAT ALL NEW GRADES SHALL SLOPE AWAY FROM BUILDING AT MIN. 2%
14. CONTACT BLUE STAKES TO MARK EXISTING UTILITIES PRIOR TO CONSTRUCTION.

Landscape Tabulations

NEW LANDSCAPE AREA 6,453 S.F.
1" LANDSCAPE ROCK @4" THICK
PLACED OVER WEED BARRIER FABRIC
SEE DETAILS THIS SHEET

TOTAL NEW LANDSCAPE AREA 6,453 S.F.

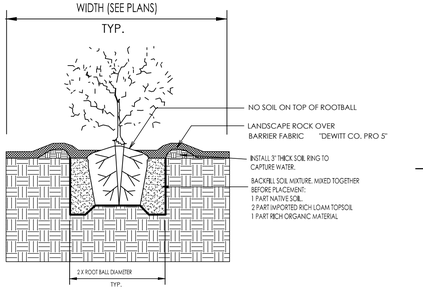

NEW PLANTING DETAIL

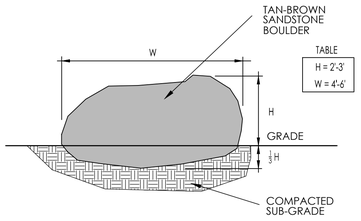

LANDSCAPE BOULDER DETAIL

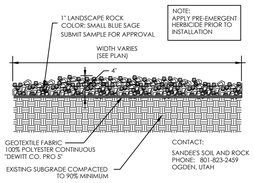

Small Blue Sage

- Fractured Rock
- Color: gray, black, reddish gold
- Size: 1 inch minus
- Uses: decorative landscaping
- Matches many colors commonly used on home exteriors and in existing landscaping

LANDSCAPE ROCK DETAIL

NORTH

11"X17" 1" = 30'-0"
24"X36" 1" = 15'-0"

0 15' 30 45'

LANDCURVE
LANDSCAPE ARCHITECTURE
2846 Beverly Street
Salt Lake City, Utah 84106
P. 801 209 1072
E reid.mitchell@gmail.com

2023-065

REID B. MITCHELL
STATE OF UTAH
LANDSCAPE ARCHITECT

STAMP

REVISIONS

FKA Les Schwab
Aiden Bell
Landscape Plan

285 S. Frontage Rd.
Centerville, Utah 84014

Landscape Plan

SHEET NAME.

LA2

SHEET NO. 2 OF 3

DATE. 6/21/2023

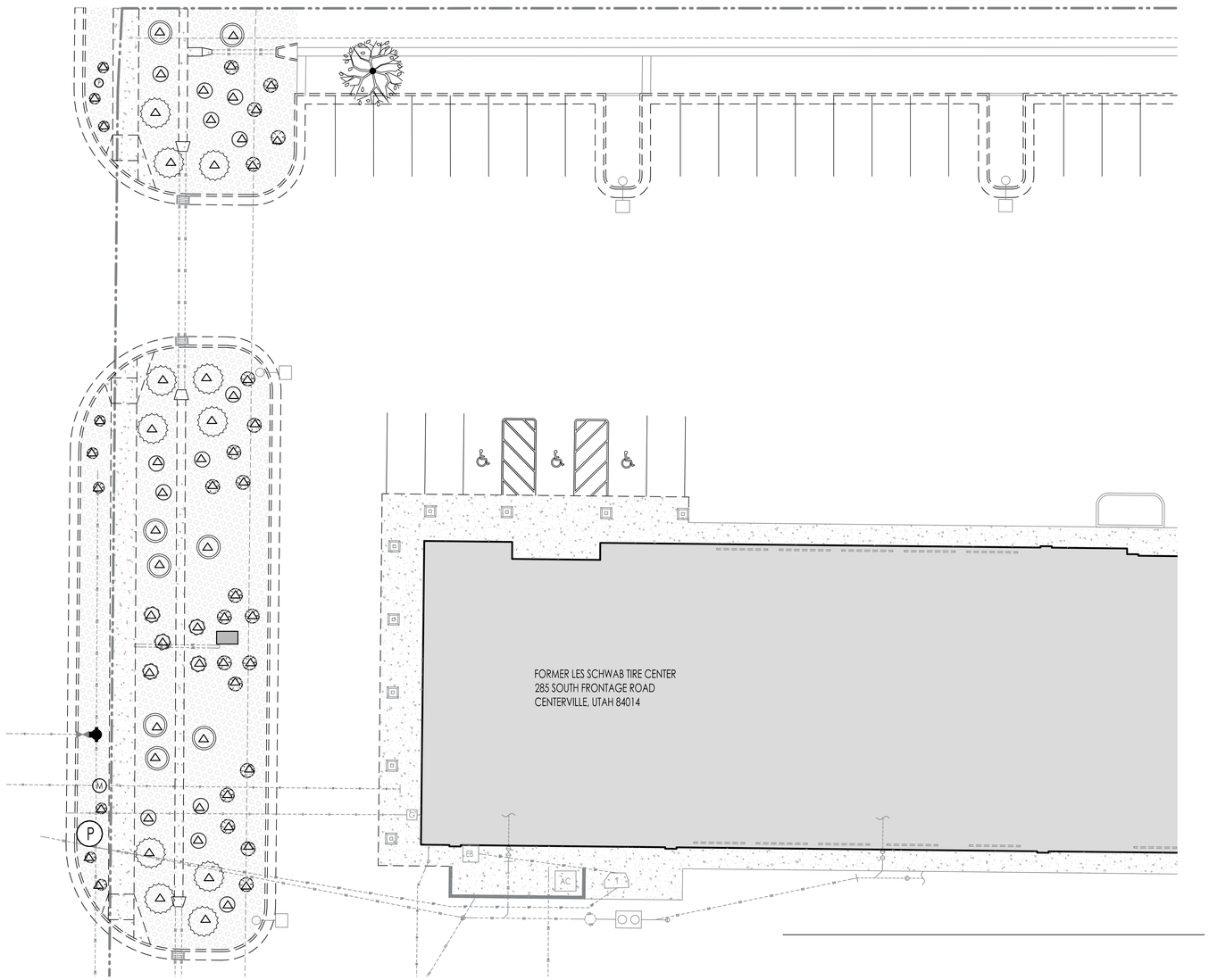

IRRIGATION SCHEDULE

SYMBOL	DESCRIPTION	MANUFACTURER	MODEL NUMBER	PSI	RADIUS	GPM	PRECIP.
△	PLANT DRIP EMITTER	HUNTER	(3) 0.5 GPH EACH SHRUBS (2) 0.5 GPH EACH PERENNIALS AND GRASSES				
	AUTOMATIC VALVE	RAINBIRD XCZ-100 PRB	MEDIUM PLUS FLOW DRIP CONTROL KITS FOR COMMERCIAL APPLICATIONS. 1" BALL VALVE WITH 1" PESB VALVE AND 1" PRESSURE REGULATING 40 PSI QUICK-CHECK BASKET FILTER 3 GPM TO 20 GPM				

PVC PIPE SLEEVE & CONTROL WIRE SLEEVE LOCATION. SYMBOL MAY INDICATE MULTIPLE SLEEVES, HOWEVER THERE SHALL BE 1 PIPE PER SLEEVE. MINIMUM SIZE SHALL BE 2 TIMES THE PIPE SIZE. SLEEVES SHALL EXTEND A MINIMUM OF 3' INTO LANDSCAPED AREA.

MAIN PRESSURE LINE- 1" PVC SCHED. 40

LATERAL LINES- PVC SCHED. 40

IRRIGATION SYSTEM NOTES

1. WORK SHALL CONFORM WITH CENTERVILLE CITY STANDARDS AND SPECIFICATIONS UNLESS OTHERWISE NOTED IN THE PLANS.
2. THE CONTRACTOR SHALL BE RESPONSIBLE FOR ENSURING PROPER COVERAGE OF ALL IRRIGATED AREAS.
3. NO MAJOR REVISIONS IN THE DESIGN WILL BE ALLOWED WITHOUT WRITTEN APPROVAL FROM THE ARCHITECT & OWNER.
4. IT IS THE RESPONSIBILITY OF THE IRRIGATION CONTRACTOR TO FAMILIARIZE HIMSELF WITH ALL GRADES, LOCATION OF WALKS, STRUCTURES AND UTILITIES. THE CONTRACTOR SHALL REPAIR OR REPLACE ALL ITEMS DAMAGED BY HIS WORK. HE SHALL COORDINATE HIS WORK WITH OTHER CONTRACTORS FOR THE LOCATION AND INSTALLATION OF PIPE SLEEVES AND LATERAL LINES THROUGH WALLS, AND UNDER ROADWAYS AND PAVED AREAS. SLEEVES INSTALLED AT IMPROPER DEPTHS WILL HAVE TO BE RE-INSTALLED BY BORING METHODS.
5. DO NOT WILLFULLY INSTALL THE IRRIGATION AS SHOWN ON THE PLAN WHEN IT IS OBVIOUS IN THE FIELD THAT UNKNOWN OBSTRUCTIONS, DIFFERENCES IN GRADE AND AREA DIMENSIONS EXIST THAT MIGHT NOT HAVE BEEN CONSIDERED DURING THE INITIAL DESIGN PHASE. SUCH OBSTRUCTIONS OR DIFFERENCES SHOULD BE BROUGHT TO THE ATTENTION OF THE OWNERS REPRESENTATIVE. IN THE EVENT THIS NOTIFICATION IS NOT PERFORMED, THE CONTRACTOR SHALL ASSUME FULL RESPONSIBILITY FOR ANY REVISIONS OR CHANGE ORDERS.
6. THE IRRIGATION CONTRACTOR CONNECT WIRES FROM NEW VALVES TO EXISTING IRRIGATION CONTROLLER
7. THE IRRIGATION CONTRACTOR SHALL ADJUST VALVES, FLUSH AND ADJUST IRRIGATION HEADS FOR OPTIMUM COVERAGE WITH MINIMAL OVERSPRAY ONTO WALKS, STREETS AND WALLS.
8. THE OWNER RESERVES THE RIGHT TO REFUSE MATERIAL OR WORK WHICH DOES NOT CONFORM TO THESE DRAWINGS AND SPECIFICATIONS. REJECTED WORK SHALL BE REMOVED OR CORRECTED AS SOON AS POSSIBLE AT CONTRACTOR'S EXPENSE.
9. GUARANTEE: ALL WORK SHALL BE GUARANTEED (FOR ONE YEAR FROM DATE OF ACCEPTANCE) AGAINST ALL DEFECTS IN MATERIAL, EQUIPMENT AND WORKMANSHIP. GUARANTEE SHALL ALSO COVER REPAIR FOR DAMAGE TO ANY PART OF THE PREMISES RESULTING FROM LEAKS OR OTHER DEFECTS IN MATERIAL, EQUIPMENT OR WORKMANSHIP, TO THE SATISFACTION OF THE OWNER. REPAIRS, IF REQUIRED, SHALL BE DONE PROMPTLY AND AT NO COST TO THE OWNER.
10. IRRIGATION CONTRACTOR IS RESPONSIBLE FOR INSTALLING CONDUITS AND WIRING FROM VALVES TO CONTROLLERS.
11. THIS SPRINKLER PLAN IS DRAWN FOR GRAPHIC CLARITY WHERE PIPING, VALVES AND WIRING ARE SHOWN IN CONC. AND ASPHALT AREAS. EXCEPT WHERE CROSSING, THE INTENT IS FOR THE PIPING, VALVES AND WIRE TO BE PLACED IN THE ADJACENT PLANTING AREAS. NO VALVES SHALL BE PLACED WITHIN PLAYING FIELD FENCES. ALL VALVES SHALL BE LOCATED OUTSIDE PLAYING FIELD FENCES IN ADJACENT TURF AREAS.

NORTH

11"X17" 1" = 30'-0"
24"X36" 1" = 15'-0"

0 15' 30 45'

LANDCURVE
LANDSCAPE ARCHITECTURE
2846 Beverly Street
Salt Lake City, Utah 84106
P 801 209 1072
E reid.mitchell@gmail.com

2023-065

STATE OF UTAH
REID B. MITCHELL
LANDSCAPE ARCHITECT

STAMP

REVISIONS

FKA Les Schwab
Aiden Bell
Landscape Plan

285 S. Frontage Rd.
Centerville, Utah 84014

Irrigation Plan

SHEET NAME.

LA3

SHEET NO. 3 OF 3

DATE. 6/21/2023

AFTER RECORDING, PLEASE RETURN TO:
David J. Crapo
Crapo Deeds PLLC
106 W 500 S, Suite 100
Bountiful, Utah 84010

CROSS ACCESS EASEMENT AGREEMENT

This CROSS ACCESS EASEMENT AGREEMENT (the "**Agreement**") is made and effective as of July 11, 2023, between Miles Bell, LC, a Utah limited liability company ("**Miles**"), and Aiden Bell LC, a Utah limited liability company ("**Aiden**").

RECITALS

A. Whereas, Miles owns that certain lot with an address of 335 S Frontage Road, Centerville, Utah ("Lot 1") and Aiden owns that lot with an address of 285 S Frontage Road, Centerville, Utah ("Lot 2"), according to the official plat on file in the Davis County Recorder's Office;

B. Whereas, Miles and Aiden (collectively, the "Parties," and individually, a "Party") desire to create and grant an easement on, over, upon, and across portions of their respective properties (Lot 1 and Lot 2 and collectively the "Lots") for purposes of ingress/egress, cross access, and for all other uses expressly contemplated by this Agreement;

C. For good and valuable consideration, the receipt and sufficiency of which are acknowledged, the Parties agree that these reciprocal easements will be as set forth in the Exhibits or areas of similar size, use, and functionality, at the reasonable discretion of the owner of the servient estate, collectively referred to as the "Easement Areas."

AGREEMENT

1. Grant of Easement. The Parties, as the owners of Lot 1 and Lot 2, hereby expressly dedicate and subject each of the forgoing parcels of real property to this Agreement intending for

this Agreement to terminate once either Party transfers, sells, encumbers, or hypothecates their respective Lot.

The Parties hereby declare that each of Lot 1 and Lot 2 described above is held and shall be held, leased, rented, used, occupied, and improved subject to the following limitations, restrictions, and covenants., subject to the terms and conditions of this Agreement as follows:

The Security Wall Easement granted herein is referred to herein as the "Security Fence Easement" and the Ingress & Egress Easement granted herein is referred to herein as the "Ingress & Egress Easement" and collectively the "Easement Area." It is the intent of the Parties that the Easements are a nonexclusive easement and that each Party shall have full use of their respective Lots, business access, and parking stalls, driveways and throughways, and access for ingress and egress. As such, the following Easement is defined and created on the property comprising the Lots with physical and geographical locations more particularly described in Exhibit A and depicted on Exhibit B (Plat Map).

1.1 **Ingress & Egress Easement.** The Parties hereby grant and convey to each other a non-exclusive, mutual cross-access easement for purposes of vehicular and pedestrian ingress and egress on, over, upon, and across the area as described in the attached Exhibit A, and depicted on Exhibit B. Such shall include the right to require removal of any obstructions including structures, barricades, damaging items, and vegetation that might be placed thereon.

1.2 **Security Fence Easement.** The Parties hereby grant and convey to each other a non-exclusive, mutual easement for purposes of constructing, operating, and maintaining a security fence running north to south, as more particularly shown on Exhibit B, (the "**Security Fence**"). This Easement is granted for the purpose of maintaining a restricted area on Lot 2, and is to be construed in a manner to ensure that the restricted area is properly protected and maintained.

2. Termination. The Easements, including the terms and conditions of this Agreement shall be terminated once either Party transfers, sells, hypothecates, or encumbers, their respective Lot, or any portion thereof. The Easements may also be terminated by mutual written consent of Miles and Aiden.

3. Modification of Easements. Each Party will not unreasonably withhold consent to requests from the other Party for modifications or reconfigurations, including changes to the size, location and usage pattern, of the Easements, provided that such modification does not significantly reduce the purpose and functionality of such Easements or Lots 1 and 2. Said modification must be done in writing with the mutual consent of the Parties.

4. Reservation of Rights. Each Party reserves the right to use its own servient estate (Miles with respect to Lot 1 and Aiden with respect to Lot 2), including the Easement Areas located thereon, as it sees fit provided such use is not inconsistent with and does not materially interfere

with the other's (the dominant estate's) use of that Easement Areas, including the construction of improvements over, under, in, along, across, and upon the servient estate in the Easement Areas.

No walls, fences, or barriers of any kind shall be constructed or maintained on the Easement Area, or any portion thereof, by any Party which shall prevent or impair the use of exercise of any of the easements granted herein or the access and movement, including without limitation, pedestrians and vehicular traffic between the Lots; provided however, landscaping and reasonable traffic controls as may be necessary to guide and control an orderly flow of traffic may be installed so long as access driveways to the parking areas in the Easement Area are not closed or blocked. The only exception to this provision shall be (1) for changes to the Easement Areas permitted by this Agreement, (2) for incidental encroachments upon the Easement Areas which may occur as a result of the use of ladders, scaffolding, storefront barricade and similar facilities resulting in temporary obstruction of portions of the Easement Area, all of which are permitted hereunder so long as their use is kept within reasonable requirements of construction work being expeditiously pursued, (3) those barriers, walls, fences, or other blockages present in previously submitted documents for approval to cities, municipalities, and counties, and (4) those barriers, walls, fences, or other blockages necessary to restrict and restrain access to restricted areas and to the Parties respective Lots after business hours.

5. AS IS. Each Party acknowledges that it accepts the Easement on an AS IS WHERE IS basis, and that all warranties as to condition, location or fitness for particular use have been fully disclaimed. The Parties acknowledge that they have had a sufficient opportunity to conduct the necessary due diligence, including consulting with outside legal counsel, to assess the benefit, obligations, and legal effect of Easement and this Agreement.

6. Maintenance of Easement Areas & Security Fence. Each Party, at its sole cost and expense, shall maintain and keep the Easement Areas and the Security Fence, on each Party's respective Lot (i.e., the servient estate) in a commercially reasonable, serviceable, neat, and acceptable condition and state of repair. The other owner (i.e., the dominant estate) shall not be obligated to maintain, repair, or replace the servient estate Easement Areas.

7. Maintenance of Ingress & Egress Easement. The Parties shall keep the Ingress & Egress Area in a serviceable, neat, and acceptable manner, such that the overall appearance of the parking lots of each Party's Lot and the Ingress & Egress Area remain uniform. The Parties shall cooperate with each other in the performance of routine and necessary repairs, overlay, sealings, resurfacing, maintenance, and snow removal of each Lots parking lot and the Ingress & Egress Area. The Parties shall equally bear the costs of snow removal, resurfacing, and maintenance of the entire Ingress & Egress Area. If the Ingress & Egress Area requires maintenance, repair, sealing, or replacement each Party shall have the right to conduct or order such service and to then invoice the other Party for one half of all reasonable costs incurred therein. The Party being billed shall remit payment for such reasonable costs incurred within 30 days of receipt of the invoice.

8. Taxes. Each owner of the Lots expressly agrees to pay or cause to be paid, prior to delinquency, directly to the appropriate taxing authorities all real property taxes and other

assessments which are levied against any part or portion of the Easement Areas owned by each owner.

9. Mediation; Default. Prior to commencing suit or other legal proceeding, the Parties agree to submit any dispute to any mutually agreed mediation service for mediation by providing to the mediation service a joint, written request for mediation, setting forth the subject of the dispute and the relief requested. The Parties shall cooperate with one another in selecting a mediation service and shall cooperate with the mediation service and with one another in selecting a neutral mediator and in scheduling the mediation proceedings. The Parties covenant that they will use commercially reasonable efforts in participating in the mediation. The Parties agree that the mediator's fees and expenses and the costs incidental to the mediation will be shared equally between the Parties.

10. Amounts Due. The prevailing Party in any action to enforce this Agreement shall be entitled to all reasonably incurred attorney fees and costs. Any amounts owing pursuant to this Agreement shall accrue interest at 15% per annum if not paid within 30 days of receiving the applicable invoice. Any action to enforce this Agreement shall be governed by Utah law without consideration of conflicts of law principles. Venue shall reside in the county in which the subject property is located.

11. No Merger. The easements, covenants, restrictions and other provisions contained in this Agreement shall remain in full force and effect despite the Lots may be owned by the same person from time to time, it being the intention of the Parties to create a perpetual easement which will not be terminated by the doctrine of merger or otherwise, unless this Agreement is terminated by Agreement of the Parties in writing.

12. Notices. Any notice or demand to be given by any Party to any other Party shall be given in writing by personal service, express mail, Federal Express, DHL or any other similar form of courier or delivery service, or mailing in the United States mail, postage prepaid, certified and return receipt requested, and addressed to such Party at the address set forth for such Party in the Davis County taxing records or, if different, at another address provided by such Party. Any party may change the address at which it desires to receive notice on written notice of such change to the other Party. Any such notice shall be deemed to have been given, and shall be effective, on delivery to the notice address then applicable for the Party to which the notice is directed; provided, however, that refusal to accept delivery of a notice or the inability to deliver a notice because of an address change which was not property communicated shall not defeat or delay the giving of a notice.

13. Interpretation. This Agreement shall inure to the benefit of, and shall be binding on, the Parties and their respective successors and assigns. Any reference to a particular Party or Lot owner shall be interpreted to include all successors to such Party. Titles and headings of paragraphs of this Agreement are for convenience of reference only and shall not affect the construction of any provisions of this Agreement. This Agreement shall be governed by, and constructed and interpreted in accordance with, the laws (excluding the choice of laws rules) of the State of Utah. Whenever possible, each provision of this Agreement shall be interpreted in such manner as to be valid under applicable law; but, if any provision of this Agreement shall be invalid or prohibited under applicable law, such provision shall be ineffective to the extent of such invalidity or prohibition without invalidating the remainder of such provisions or the remaining

provisions of this Agreement. Except as otherwise provided in this Agreement, no remedy provided in this Agreement shall be exclusive of any other remedy at law or in equity (whether existing on or created after the date of this Agreement), and all remedies under this Agreement may be exercised concurrently, independently or successively from time to time. The failure on the part of any person to promptly enforce any right under this Agreement shall not operate as a waiver of such right, and the waiver of any default shall not constitute a waiver of any subsequent or other default.

14. Indemnification. The Parties indemnify, hold harmless, and agree to defend the other for, from and against all claims, damages, expenses, and liens (including, without limitation, attorneys' fees and reasonable investigative and discovery costs), liabilities and judgments on account of injury to persons, loss of life, or damage to property occurring on the accused Party's Lot, caused by the active or passive negligence of the accused Party, or the breach by the accused Party of any of its obligations; provided, however, this indemnification does not apply to the extent any loss of life, injury to any person, or damage to any property is caused by the active or passive negligence of the non-accused Party, or its respective agents, servants or employees.

15. No Partnership. The Parties do not by this Agreement, or for any purpose, become partners or joint venturers of each other in the conduct of their respective businesses or otherwise.

16. Counterparts. This Agreement may be executed in many counterpart originals, each of which will be deemed an original instrument for all purposes, but all of which will comprise the same instrument.

17. Representations and Warranties. Each Party represents and warrants to the other that it has the right to grant the Easement as set forth herein, that such grant does not violate any applicable law, contract, or company by-law, and that the person signing on behalf of its respective Party has the necessary authority, consent, and or company resolution to do so.

18. Entire Agreement. This Agreement constitutes the entire agreement between the Parties pertaining to the subjects contained in this Agreement. All prior and contemporaneous agreements, representations and understandings of the Parties, oral or written, pertaining to the subjects contained in this Agreement are superseded by and merged in this Agreement. No supplement, modification or amendment of this Agreement will be binding unless in writing and executed by each Party and recorded in the records of the Davis County Recorder.

[SIGNATURE PAGE FOLLOWS]

IN WITNESS WHEREOF, this Agreement has been made as of the first date set out above.

Miles Bell LC, a Utah limited liability company

By: _____
Dave Bell, Member

Aiden Bell LC, a Utah limited liability company

By: _____
Dave Bell, Member

STATE OF UTAH)
:SS
DAVIS COUNTY)

The foregoing instrument was acknowledged before me this _____ day of _____, 2023, by Dave Bell, the duly authorized Member of Miles Bell, LC, a Utah limited liability company, who acknowledged to me that Aiden Bell LC did execute this Agreement with duly obtained authority.

_____
NOTARY PUBLIC

STATE OF UTAH)
:SS
DAVIS COUNTY)

The foregoing instrument was acknowledged before me this _____ day of _____, 2023, by Dave Bell, the duly authorized Member of Aiden Bell, LC, a Utah limited liability company, who acknowledged to me that Aiden Bell LC did execute this Agreement with duly obtained authority.

_____
NOTARY PUBLIC

Exhibit A

CROSS-ACCESS EASEMENT

[*Exhibit A*]

Exhibit B

PLAT MAP

PLANNING COMMISSION

Staff Report

8/9/2023

Item No. 1.
Title: Community Development Director's Report
Initiated By:
Staff Representative:

SUBJECT:

Next Planning Commission Meeting - **August 23, 2023**
Tentative Items:

- *Preliminary Subdivision PUD, Parrish Creek Business Park*
- *Parking Modification Request - Top Gear Motors LLC*
- *Conditional Use Permit - Top Gear Motors LLC*
- *Legacy Crossing at Parrsh Lane PDO Amendment*
- *Proposed City Code Text Amendment - CZC 12.41.060(b)(5-6)*
- *Proposed General Plan Amendments - CMC 12-430-3(2) & 12-480-6(4)*

RECOMMENDATION:

BACKGROUND:

ATTACHMENTS:

PLANNING COMMISSION

Staff Report

8/9/2023

Item No. 1.
Title: Minutes Review and Approval
Initiated By:
Staff Representative:

SUBJECT:

RECOMMENDATION:

BACKGROUND:

ATTACHMENTS:

1. 7-26-23 PC Minutes

PLANNING COMMISSION MINUTES OF MEETING
Wednesday, July 26, 2023
7:00 p.m.

A quorum being present at City Hall, 250 North Main Street, Centerville, Utah, the meeting of the Centerville City Planning Commission was called to order at 7:00 p.m.

MEMBERS PRESENT
Shawn Hoth
Mason Kjar
LaRae Patterson
Heidi Shegrud, Chair

MEMBERS ABSENT
Matt Larsen, Vice Chair
Tyler Moss

STAFF PRESENT
Cory Snyder, Community Development Director
Lisa Romney, City Attorney
Whittney Black, Assistant Planner

VISITORS
Daniel Rasband
Paul Feser
Chand Randal
Sam Nelson (via Zoom)

LEGISLATIVE THOUGHT/PRAYER Commissioner Patterson

PLEDGE OF ALLEGIANCE

PARKING MODIFICATION REQUEST – BRUSH AND PALETTE ART STUDIO

Assistant Planner Whittney Black explained the applicant had leased a portion of the building located at 281 South Main Street, and wanted to use the space for artistic instruction (Brush and Palette Art Studio). The property was located within the Traditional Main Street Subdistrict of the South Main Street Corridor (SMSC) Overlay District, and the building was constructed in 1979 (4568 square feet) with 30 parking spaces. With the City's current parking requirements for the SMSC and the addition of the proposed use, the site would be deficient by 12 parking spaces, thus a parking modification was requested. The parking modification request included a shared parking proposal, arguing that the uses would not produce a substantial demand for parking at the same time. The peak hours for the medical service providers in the building were between 7:00 a.m. and 4:00 p.m., and Brush and Palette's peak hours would be between 4:00 p.m. and 9:00 p.m. Ms. Black said staff believed the shared parking arrangement could work with the differing peak hours, and recommended approval of the parking modification request.

Daniel Rasband, applicant, said he and his wife were excited to start taking registrations for classes. He described a variety of evening classes that would be offered, and said the maximum number of students would be 12-15. Easel space would be available to rent for a limited number of individuals during daytime hours. Some classes may also be offered during the day, with a limited number of students.

Chair Shegrud said she was in favor of finding compatible uses for building space, and said she believed the applicant had clearly thought through the situation.

Commissioner Hoth **moved** to approve a parking modification with the following conditions and reasons for action. Commissioner Patterson seconded the motion, which passed by unanimous vote (4-0).

Conditions:

1) The proposed parking modification is for the on-site parking located at 281 South Main Street.
2) The parking modification is narrowly defined for and limited to the following businesses:
    i. Pitt Family Dental, P.C.
    ii. Arbuckle Dental, P.C.
    iii. Ridge Park Dental South
    iv. David G. Johnson, D.D.S., P.C.
    v. D.B. Knoles DDS, PLLC
    vi. Brush and Palette Art Studio
3) This parking modification permits the shared use of 12 of the 30 on-site parking spaces.
4) The uses sharing the parking lot shall not produce a substantial demand for parking at the same time.
5) Required parking spaces reserved for persons with disabilities shall not be reduced.
6) The parking lot shall be continuously available unless an alternative legal parking lot is provided.
7) All parking spaces shall be available without charge.
8) No future building additions, enlargements, or new buildings within whole or part of a shared use site arrangement, which requires additional on-site parking, shall be undertaken unless the original on-site required parking count is provided, or a new parking modification is approved by the City.
9) Any changes to the uses, as defined in the parking modification, or any proposed additional uses to the site shall NOT be undertaken, unless additional approvals are obtained from the City.
10) This parking modification shall become null and void if the conditions of this approval are found to be in violation or the approved uses are altered or abandoned in manner that required additional parking capacity, unless otherwise approved by the City.
11) The property owner shall sign an “affidavit of acknowledgement” to agree to the terms and conditions of this parking modification and intent to comply with the approval, which shall be returned to the Community Development Department.
12) This “parking modification” shall not become effective until the affidavit of acknowledgement is submitted, as per Condition 11.

Reasons for action:

a) The Planning Commission finds that according to CZC 12.52.110(a), Parking Modifications, the Planning Commission may modify the number of parking spaces required.
b) The Planning Commission finds that based on the information provided, the analysis from planning staff, and due to the nature of the current actual uses and the proposed personal instruction service use, the ordinance required calculations are unnecessary at this time.

c) Therefore, the Planning Commission finds that, with the conditions imposed, the parking modification will accommodate the current parking demand for the site.

PUBLIC HEARING – CONCEPTUAL SUBDIVISION, CHASE CREEK SUBDIVISION AT APPROXIMATELY 224 WEST CHASE LANE

This item was previously reviewed and tabled at the January 25, 2023 Planning Commission Meeting. The concept plan for consideration included a six-lot (previously nine-lot), single-family subdivision with a cul-de-sac off Chase Lane. Ms. Black said the applicant had addressed all concerns expressed by the Planning Commission in January, and staff recommended the Planning Commission accept the conceptual subdivision. Community Development Director Cory Snyder commented that double-frontage was not approved on Chase Lane, so the Lot 5 double frontage would need to be resolved. The Planning Commission and staff discussed the conceptual retention plan.

Paul Feser, applicant, said the owner wanted to make sure the existing creek on the property (Barnard Creek) was cared for with the development. Mr. Feser answered questions about the proposed retention, and said he was willing to work with the City on the double-frontage issue.

Chair Shegrud opened a public hearing at 7:40 p.m., and closed the public hearing seeing no one come forward. Commissioner Kjar said he was ready to vote in favor. Chair Shegrud said she liked the six-lot concept plan better than the nine-lot concept.

Commissioner Kjar made a **motion** for the Planning Commission to accept the conceptual subdivision plan for the Chase Creek Subdivision located at approximately 224 West Chase Lane, with the following conditions and directives, and with the following reasons for action. Chair Shegrud seconded the motion, which passed by unanimous vote (4-0).

1. The applicant shall apply for a Preliminary Subdivision Plat that conforms to the requirements of CMC 15.03.030.
2. The potential violation of the double frontage shall be addressed at the next stage.

Reasons for action:

a. The conceptual subdivision plan appears to be consistent with the applicable Neighborhood Plan as described in CMC 12.480.5.
b. The proposed subdivision plan appears to likely be able to satisfy the Development Standards provided in CZC 12.32.300.
c. The applicable review standards of CMC 15.02 have been reviewed and directives established to allow the proposal to proceed to a preliminary subdivision plan submittal.

FINAL SUBDIVISION PLAT, CENTERVILLE INDUSTRIAL FLEX PUD, 50 SOUTH 1250 WEST

Mr. Snyder explained the applicant desired to develop a significant underutilized portion of property at approximately 50 South 1250 West (16.85 acres) as an industrial flex-use project consisting of multiple buildings and related improvements. A portion of the project would be located within West Bountiful boundaries. Mr. Snyder said the City had not received a Preliminary Title Report, but said he believed the Preliminary Title Report could be resolved as the process moved forward. Mr. Snyder recommended moving the Final Subdivision Plan on to the City Council.

Sam Nelson with Stokes Stevenson, said he believed West Bountiful had approved the Interlocal Agreement and forwarded the document to Centerville. He said he would provide an updated Title Report.

Commissioner Patterson made a **motion** for the Planning Commission to recommend approval of the Final Subdivision Plan for the Centerville Industrial Flex Development, located at approximately 50 South 1250 West, subject to the following conditions and with the following reasons for action. Commissioner Hoth seconded the motion, which passed by unanimous vote (4-0).

Conditions:

1) The Final Subdivision Plat shall be reviewed and approved by the City Engineer in accordance with the City's Subdivision Plat Format.
2) The Final Subdivision Plat shall be reviewed by applicable staff for compliance with following:
    a. Provision of the required utility easements, as required by ordinance.
    b. Note the required "open space" easement for the common areas.
    c. Any needed language changes regarding the term "public roads" to reflect the needed cross-access needs of the subdivision.
3) Provide an updated Preliminary Title Report for review by applicable City staff.
4) Final Subdivision Construction Plans may consist of the Construction Drawings for the related Final Site Plan Approval, as deemed acceptable by the City Engineer.

Reasons for action:

a) The Planning Commission finds that a Final Subdivision Plan, with the conditions imposed, is consistent with the City Approved Final Site Plan approved in May of 2023 and Preliminary Subdivision Approval, of June 14, 2023.
b) The Planning Commission finds that the Planned Unit Development (PUD) implements the related Final Site Plan Approval granted by the City in May of 2023.
c) Therefore, the Planning Commission finds that, with the conditions imposed, the Final Subdivision Plan meets the requirements of CMC 15.06.010 Planned Unit Development and CMC 15.04.050 Final Subdivision.

PUBLIC HEARING – CONCEPTUAL SUBDIVISION, PARRISH CREEK PUD SUBDIVISION, 1160 NORTH 950 WEST

The applicant received Final Site Plan Approval from the Planning Commission on September 14, 2022 for Lots 1, 3, and 4 of the Parrish Creek Business Park with a condition that the three lots would be combined into a single parcel. Mr. Snyder explained the applicant desired to amend and re-subdivide the property and convert the original lots into a single planned unit development (PUD) to allow future independent ownership of the proposed two buildings (one existing/one to be constructed), and transform the approved parking, landscaping, and storage area into common areas for use of the future building owners. Mr. Snyder said the applicant only submitted hard copies of the documents. City Attorney Lisa Romney commented that by ordinance the City required submission of three hard copies and one electronic copy.

Chair Shegrud opened a public hearing at 7:55 p.m., and closed the public hearing seeing no one come forward. Commissioner Kjar said he found the scanned version of the hard copy difficult to read, and would only be inclined to approve the conceptual plan because the Planning Commission had reviewed the project previously. Chair Shegrud said she agreed with

Commissioner Kjar and would be nervous if the Commission had not reviewed the project so many times.

Commissioner Kjar **moved** to accept the Conceptual Subdivision Plan for the Parrish Creek Business Park, subject to the following directives and with the following reasons for action. Commissioner Hoth seconded the motion, which passed by unanimous vote (4-0).

Directives:

1) The applicant shall prepare and submit a Preliminary Subdivision Plan that conforms to the requirements of CMC 15.03.030.
2) The preliminary subdivision plans shall depict the required easements for overall parcel, as deemed applicable by the City Engineer.
3) The applicant shall prepare and submit draft versions of the required documents to establish an Owners Association and related CC&Rs meeting the expectations of CMC 15.06.010.
4) The preliminary subdivision plans and subdivision layout shall be subject to consistency with the applicable Final Site Plan Approval for the proposed development.

Reasons for action:

a) The Planning Commission finds that a Conceptual Subdivision Plan is a planned development request and is dependent upon approval of the related Final Site Plan, thereby guaranteeing that any subsequent owner of the lots would not be in possession of a non-conforming situation or dependent upon another lot owner for compliance with the Zoning Ordinance.
b) The Planning Commission finds that, with the applied directives, the proposed Conceptual Subdivision Plan would likely meet the requirements of CMC 15.06.010 Planned Unit Development.

COMMUNITY DEVELOPMENT DIRECTOR'S REPORT

The Planning Commission was scheduled to meet next on August 9, 2023.

MINUTES REVIEW AND APPROVAL

Minutes of the July 12, 2023 Planning Commission Meeting were reviewed. Chair Shegrud **moved** to approve the minutes, and Commissioner Patterson seconded the motion. The motion passed by unanimous vote (4-0).

ADJOURNMENT

At 8:07 p.m., Chair Shegrud **moved** to adjourn the meeting. Commissioner Hoth seconded the motion, which passed by unanimous vote (4-0).

_____ _____
Jennifer Robison, City Recorder Date Approved