PLANNING COMMISSION AGENDA

NOTICE IS HEREBY GIVEN THAT THE CENTERVILLE PLANNING COMMISSION WILL HOLD A REGULAR MEETING AT 7:00 PM ON JUNE 28, 2023 AT CENTERVILLE CITY HALL, 250 NORTH MAIN STREET, CENTERVILLE, UTAH.

Centerville City Planning Commission meetings are open to the public, unless otherwise closed for reasons allowed by law. Centerville City Planning Commission meetings may be conducted via electronic means pursuant to Utah Code § 52-4-207. In compliance with the Americans with Disabilities Act, individuals needing special accommodations due to a disability may contact the City Recorder at (801) 295-3477, at least 24 hours in advance of the meeting. The Commission reserves the right to modify the sequence of agenda items in order to facilitate special needs or provide greater efficiency.

The full agenda packet and backup materials can be found on the Centerville City website at:
https://centervilleutah.gov/129/Agendas-Minutes

A. CALL TO ORDER

1. ROLL CALL

2. LEGISLATIVE PRAYER OR THOUGHT

3. PLEDGE OF ALLEGIANCE

B. BUSINESS ITEMS

Business action or discussion items to be considered by the Planning Commission.

1. PUBLIC HEARING - Conceptual Site Plan - Pheasantbrook Townhome Expansion Project - ADMINISTRATIVE DECISION

   The applicant, Eric Wood, representing the Pheasantbrook Homeowners Association, is seeking to expand the number of townhomes in the Pheasantbrook PUD Subdivision. Mr. Wood is proposing to develop 12 new townhomes (3 buildings, 4 units per building) in the south-west corner of the existing subdivision. That piece of property is currently being used for storage and sports courts.

C. COMMUNITY DEVELOPMENT DIRECTORS REPORT

1. Community Development Director's Report

   Next Planning Commission Meeting - July 12, 2023

   Tentative Items:

   - *Conditional Use Permit - Vechicle Sales, Top Gear Motors*
   - *Small Subdivision - Williamsburg Place, Lot 9*
   - *Conceptual Subdivision - Chase Creek, previously tabled by PC*
   - *Conceptual Site Plan - Aiden Bell LC Site (former Les Schwab)*
   - *Conceptual Site Plan - Miles Bell LC (aka Dave's Complete Auto)*

D. MINUTES

Minutes of prior meetings may be reviewed and accepted. Minutes review and approval shall comply with the Centerville City Minutes Approval Policy.

1. Minutes Review and Approval

E. ADJOURNMENT

CERTIFICATE OF POSTING

I hereby certify that this notice and agenda was posted at Centerville City Hall, published on the Utah Public Notice Website, and provided to a newspaper or media correspondent in accordance with the requirements of the Utah Open and Public Meetings Act, including, but not limited to, provisions of Utah Code § 52-4-202.

Jennifer Robison
Centerville City Recorder

PLANNING COMMISSION

Staff Report

6/28/2023

Item No. 1.
Title: PUBLIC HEARING - Conceptual Site Plan - Pheasantbrook Townhome Expansion Project - ADMINISTRATIVE DECISION
Initiated By: Applicant
Staff Representative: Whittney Black, Assistant Planner

SUBJECT:

The applicant, Eric Wood, representing the Pheasantbrook Homeowners Association, is seeking to expand the number of townhomes in the Pheasantbrook PUD Subdivision. Mr. Wood is proposing to develop 12 new townhomes (3 buildings, 4 units per building) in the south-west corner of the existing subdivision. That piece of property is currently being used for storage and sports courts.

RECOMMENDATION:

BACKGROUND:

ATTACHMENTS:

1. 06-28-2023 PC Staff Report Conceptual Site Plan Pheasantbrook Expansion
2. Pheasantbrook - Civil Drawing Set
3. Pheasantbrook - Fences
4. Pheasantbrook - Landscaping
5. Pheasantbrook - Proposed Plat
6. Pheasantbrooke - Topo Survey
7. Pheasantbrook - Parking Analysis
8. Pheasantbrook - Proposed Buildings & Elevations
9. Pheasantbrook - Vehicle Circulations

CENTERVILLE CITY
COMMUNITY DEVELOPMENT DEPARTMENT
655 North 1250 West, Centerville, Utah 84014
(801)292-8232

STAFF REPORT
AGENDA: ITEM 1

PROPERTY OWNER:	**PHEASANTBROOK HOMEOWNERS ASSOCIATION – MATTHEW GIBSON, HOA BOARD PRESIDENT**
APPLICANT:	**ERIC WOOD (ericrobertwood@gmail.com)**
PROPERTY LOCATION:	**APPROXIMATELY ACROSS FROM 249 PHEASANTBROOK DR**
PARCEL SIZE:	**3.03 ACRES**
ZONING DISTRICT:	**RESIDENTIAL-HIGH**
APPLICATION:	**CONCEPTUAL SITE PLAN FOR TOWNHOME EXPANSION PROJECT**

BACKGROUND

The applicant, Eric Wood, representing the Pheasantbrook Homeowners Association, is seeking to expand the number of townhomes in the Pheasantbrook PUD Subdivision. Mr. Wood is proposing to develop 12 new townhomes (3 buildings, 4 units per building) in the south-west corner of the existing subdivision. That piece of property is currently being used for storage and sports courts. The original development was constructed in the late 1970s.

The proposed dwelling units will be very similar in design to what already exists in the subdivision. The plans depict two story townhomes with a two-car garage.

CONCEPTUAL SITE PLAN REVIEW – *CZC 12.21.110(d)*

<u>City's General Plan</u>

According to the General Plan, it is the desire of the community to maintain the single-family residential character of development. The Plan continues to explain that when medium or high-density residential development is allowed, it should be in appropriate locations. It should also provide "usable open spaces, landscaping, and other associated amenities which will assure consistency with the residential quality desired in Centerville. The use of planned unit developments to achieve the foregoing objectives is desirable and preferred." (*CMC 12-420-2).*

Per the City's General Plan, this development is in the Northwest – Neighborhood 4. This neighborhood plan strives to provide for the future land use pattern for the area located between Lund Lane, Main Street, Parrish Lane, and I-15. One goal of this plan is to establish appropriate land-use patterns and land-use transitions. This should be accomplished by allowing compatible land-uses adjacent to each other.

Staff Response: It is the opinion of staff that the proposed expansion meets the intent of the General Plan. The proposal is consistent with existing land-uses in the area and would eliminate incompatible uses (i.e., outside storage). The development already exists within a Planned Unit Development (PUD) that ensures usable open spaces, landscaping, and other amenities that are consistent with the residential character of development in the area.

Table of Uses – *CZC 12.36*

This proposal can be described as multiple-family dwelling units. Under the table of uses that use is considered a conditional use in the Residential-High Zone.

Staff Response: A conditional use permit will be required to be submitted before or with the final site plan application. Concerns to address with the conditional use permit will be discussed later in this report.

Development Standards for the R-H Zone

R-H Development Standards *CZC Table 12.32.300*			
Development Standard	**Required**	**Actual**	**Compliance**
Building Standards			
Distance between buildings	6 Feet	50 Feet/ 24.2 Feet	Yes
Maximum Height	35 Feet	32 Feet	Yes
Lot and Parcel Standards			
Minimum Area	1 Acre	3.03 Acres	Yes
Setback Standards			
Front	25 Feet	>25 Feet – Main St.	Yes

Side	8 Feet	8.37 Feet	Yes
Rear	20 Feet	21.57 Feet	Yes
Site Standards			
Buildable Area	3,000sqft	Not depicted – likely site is 3.03 acres	Yes
Gross Density (Permitted)	Max 8 units per acre	9 units per acre	No
Gross Density (Conditional Use)	Max 12 units per acre	9 units per acre	Likely
Hard Surfacing, Total	60%	Not depicted	Likely
Outside Storage	Not permitted	Removing Nonconformity	Yes

Off-Street Parking and Loading – *CZC* 12.52.300

Use	Standard	Provided	Compliance
Dwelling, multiple-family	2 or more-bedroom units: 2 spaces per dwelling unit	392 Total Spaces *(Averages 2.5spaces per unit)*	Yes

Landscaping – *CZC 12.51.070(g)*

Development Standard	Required	Actual	Compliance
Landscaping, non-single family project	40% of site	31%	No*
Open Space Trees & Shrubs Requirement	1 Tree & 2 shrubs per dwelling unit	Not depicted	Likely

*See Landscaping and Open Space section of the report.

Screening – *CZC 12.51.110*

Per the Zoning Code, any trash receptacles will need to be screened from view by a wall or fence that meets the following:

- Is at least 6 feet in height.
- Provides complete visual screening of the receptable.
- Is compatible in material and color with the main building on the lot or parcel.

A dumpster enclosure is shown in the submitted materials. The applicant has indicated that the enclosure will be a 6ft high wood fence.

Staff Response: Staff believes the screening requirements per *CZC 12.51.110* have been satisfied.

Signage – *CZC 12.54.100*

All signage requires separate permits and must be approved by the Zoning Administrator as part of the sign permit application process. However, the final site plan needs to indicate the location of any wall or monument signage.

Staff Response: The applicant has indicated that no new signage will be added with this expansion.

Site Engineering, Utility Plans, and Easements

The submitted conceptual plan depicts the following public service utilities:

- Sanitary Sewer
- Storm Drain
- Culinary Water
- Power

The applicant will need to get a utility provider letter from the following entities:

- Dominion Energy
- Rocky Mountain Power
- South Davis Metro Fire
- South Davis Sewer
- Centerville Deuel Creek Irrigation Co.

Location of easements will be determined based on the utility plan as reviewed by the City Engineer.

Staff Response: The Civil Plans for the project have not yet been reviewed by the City Engineer. The needed easements will be located based on his review of the utility plan. Much of the site is already developed, so the existing utilities will most likely just need to be extended to accommodate this expansion.

Fences and Walls – *CZC 12.55.110*

According to the Zoning Code, "*No fence, wall, or other similar structure exceeding six feet in height shall be erected in ay rear or side yard…"*

Staff Response: The site plan depicts a combination of existing and proposed fencing. The existing 10ft chain link fence around the sport court will be removed. The vinyl fence parallel to Pheasantbrook Dr will also be removed. The vinyl fence on the west would remain as would the vinyl fence on the southern boundary of the property. The vinyl fence on the south would also be extended to replace the 10ft chain link fence.

Additional Development Standards for R-H Zones – *CZC 12.32.055*

Architectural Design and Exterior Design Standards

1. *Architectural Design Standards. All primary buildings within the R-M and R-H Zones shall be designed by a licensed, professional architect and all drawings submitted for approval or permit shall bear the architect's stamp for the State of Utah.*

2. *Exterior Design Standards. All sides of primary buildings within the R-M and R-H Zones shall receive design consideration with particular attention given to areas exposed to public view.*

    1. *All primary buildings within a development project shall possess an overall building architectural theme, including, but not limited to, exterior building materials, textures, colors and signage.*

    2. *The apparent mass of primary buildings or structures shall be minimized through design, articulation, and use of materials. An open design is desired that visually and physically breaks up the mass and footprint of buildings. Approaches such as the use of vertical and horizontal planes, roof pitches, roof lines, windows, reveals, and alcoves shall be used to create façade variation, shadows, corners, and architectural interest. Articulation approaches should not appear to be applied randomly or merely a surface treatment. In addition, the use of any multiple articulation approaches shall be coordinated to affect a complementary building design.*

    3. *Natural or natural-appearing materials, such as stone, cultured stone, brick, and wood, shall be the design gestures used in the architectural design of all primary buildings. Wood siding, cement fiber board siding, and other similar appearing materials shall be the other main materials used in the design of all residential buildings. Substantial or prominent use of synthetic stucco, and unnatural appearing materials, such as metal, vinyl, and plastics are to be used sparingly. Use of such secondary and/or accent materials shall not exceed 20% of the building or structure's exterior.*

    4. *The Planning Commission shall review and approve architectural design of buildings within the R-M and R-H Zones in accordance with the provisions set forth herein during conditional use permit and/or site plan review.*

Staff Response: The applicant provided the elevations of the proposed buildings but did not provide descriptions of what materials would be used. The proposed buildings seem to match what already exists in the Pheasantbrook Subdivision. However, the applicant will need to address how their project meets these standards for exterior design.

Landscaping and Open Space – *CZC 12.51.070*

The applicant has provided the following calculations concerning landscaping and open space.

Existing Landscaping/Open Space Calculations		
Total Area: 887,957.6sqft	Total Landscaping: 271,085.2sqft	30.5%

Total Landscaping/Open Space Calculations After Development		
Total Area: 933,575.6sqft	Total Landscaping: 289,309.2sqft	30.9%

Per *CZC 12.51.070(g)*, non-single-family projects are required to have at least 40% of landscaped open space. This landscaping should be designed to enhance crime prevention, provide privacy, and maximize energy efficiency by planning for proper solar orientation. This design should also include a minimum of 1 tree and 2 shrubs per dwelling unit.

Nonetheless, per CZC 12.22.080 Other Nonconformity, the development was originally approved with only 30.5% landscaping and the expansion would not trigger the criteria to be brought into conformance with the 40%, so long as there is not a reduction in the amount of the original extent. The reformatting of the development layout actually increases the landscape area by 0.4%.

Buffer landscaping is also required on the west side of the proposed buildings. According to *CZC 12.51.070(b)* the buffer depth when high intensity zones meet low intensity zone is 25ft. A six feet high architectural buffer is also required and has been provided in the form of a 6ft vinyl fence. Also, a minimum of one tree shall be provided for every 500 square feet of landscaped area.

Staff Response: Several landscaping standards have not been addressed in this application. An official landscaping plan addressing all the standards described above will need to be submitted with the final site plan application.

Use of Public and Private Roadways

"All dwellings within residential developments in R-M and R-H Zones shall be accessed from a public roadway, unless otherwise approved as part of a planned development or condominium."

Staff Response: The applicant is not proposing any new roadways. The development already has access to Chase Lane and Main Street from Pheasantbrook Dr.

CONDITIONAL USE PERMIT DIRECTIVES

As a result of being in the Residential-High (R-H) Zone and the desire for approximately 9 units per acre, a Conditional Use Permit will be required before the final site plan can be issued. In their CUP application the applicant will need to address how the new townhomes will impact issues like landscaping, open space, parking, lighting, and pedestrian and vehicular circulation.

Etc., and how those impacts will be mitigated. A whole description of the approval standards for a CUP can be found in *CZC 12.21.100(e).*

NOTE - SUBDIVISION PROCESS

As a note, if the property owner wants to sell these proposed units for individual ownership the PUD Subdivision approval would need to be amended. That would trigger the subdivision process. This is a three-application process including the concept plan, preliminary plat, and the final plat. If the property owner would like to retain ownership and rent out the units all that is required is the site plan process and necessary building permits.

PLANNING STAFF RECOMMENDATIONS

[PROPOSED MOTION #1] – *I hereby make a motion for the Planning Commission to TABLE the Conceptual Site Plan for Pheasantbrook Part VI PUD Subdivision, parcel number 02-034-0093, with the following directives:*

1. *The applicant shall address how the proposed development achieves the standards described in CZC 12.32.055(a,b) for architectural and exterior design.*
2. *The applicant shall provide a landscaping plan that includes the following:*
    a. *1 tree and 2 shrubs per dwelling unit.*
    b. *A buffer zone on the west side of the project, abutting the Residential-Low Zone with a depth of 25 feet.*
    c. *A six feet high architectural buffer located within the buffer zone.*
    d. *1 tree for every 500 square feet of landscaped area.*

[PROPOSED MOTION #2] *– I hereby make a motion for the Planning Commission to ACCEPT the Conceptual Site Plan for the Pheasantbrook Part VI PUD Subdivision, parcel number 02-034-0093, with the following directives:*

1. *A final site plan shall be submitted as outlined in CZC 12.21.110(e).*
2. *The final site plan shall provide a complete landscaping plan, designed by a landscape architect.*
3. *The landscaping plan shall include the following:*
    a. *1 tree and 2 shrubs shall be provided per dwelling unit.*
    b. *A buffer zone on the west site of the project, abutting the Residential-Low Zone, with a depth of 25 feet.*
    c. *A six feet high architectural buffer shall be located within the buffer zone.*
    d. *1 tree shall be provided for every 500 square feet of landscaped area.*
4. *The final site plan shall address how the proposed development achieves the standards described in CZC 12.32.055(a,b) for architectural and exterior design.*

5. *In conjunction with the Final Site Plan submittal, a Conditional Use Permit Application shall be submitted for the requested density of up to 12 units per acre.*
6. *If necessary for the sale of individual units, a PUD Subdivision amendment shall be applied for beginning with the submittal of a concept subdivision plan as outlined in CMC 15.02.*

Suggested Reasons for the Action (Findings)

a. *The Conceptual Site Plan appears to be consistent with the applicable Neighborhood Plan as described in CMC 12-480-5.*
b. *The Conceptual Site Plan with modifications could likely comply with the expected development standards described in CZC 12.32.055, CZC 12.32.300, and as also considered in the applicable Staff Report of June 28, 2023.*
c. *Therefore, the Planning Commission finds that the acceptance of this Conceptual Site Plan is for the proposed development submittal is warranted.*

PHEASANTBROOK PH 6 ADDITION

265 Pheasantbrook Dr,

LOCATED IN THE SECTION 07, T.2N., R.1E., S.L.B.&M.
Centerville CITY, Davis COUNTY, UTAH

VICINITY MAP

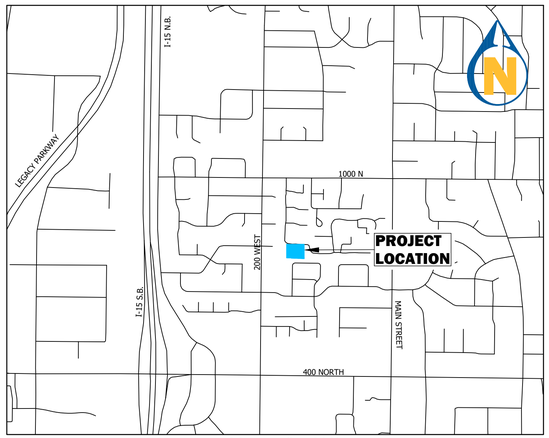

SCALE: 1"=1000'

CIVIL DRAWING INDEX

SHEET	TITLE
C100	COVER AND INDEX
C101	NOTES AND LEGEND
C200	EXISTING CONDITIONS
C300	DEMOLITION PLAN
C400	SITE PLAN
C500	GRADING PLAN
C600	UTILITY PLAN
C640	STORM SEWER PLAN
C690	EROSION CONTROL PLAN
C691	EROSION CONTROL DETAILS
C692	STORMTECH 1 DETAILS
C700	SANITARY SEWER PROFILE MAIN
C710	SANITARY SEWER PROFILE 2
C720	STORM SEWER PROFILE MAIN
C730	STORM SEWER PROFILE 2
C910	UTILITY DETAILS

GENERAL NOTES

1) ALL WORK WITHIN A PUBLIC RIGHT-OF-WAY SHALL CONFORM TO THE RIGHT-OF-WAY OWNER'S STANDARDS & SPECIFICATIONS.

2) ALL UTILITY WORK SHALL CONFORM TO THE UTILITY OWNER'S STANDARDS & SPECIFICATIONS.

3) THESE PLANS DO NOT INCLUDE DESIGN OF DRY UTILITIES. THESE PLANS MAY CALL FOR RELOCATION, AND/OR REMOVAL AND/OR CONSTRUCTION OF DRY UTILITIES, BUT ARE NOT OFFICIAL DRAWINGS FOR SUCH. DESIGN AND COORDINATION OF DRY UTILITIES IS BY OTHERS.

4) THE CONTRACTOR SHALL COORDINATE AND OBTAIN ANY PERMITS REQUIRED FOR THE WORK SHOWN HEREON.

5) THE LOCATION AND ELEVATIONS OF UNDERGROUND UTILITIES SHOWN ON THESE PLANS IS A BEST ESTIMATE BASED ON UTILITY COMPANY RECORDS, BLUESTAKES, AND FIELD MEASUREMENTS OF READILY OBSERVABLE ABOVE-GROUND FEATURES. AS SUCH, THIS INFORMATION MAY NOT BE COMPLETE, UP-TO-DATE, OR ACCURATE. IT IS THE CONTRACTOR'S RESPONSIBILITY TO STOP WORK AND NOTIFY THE ENGINEER IF CONFLICTING INFORMATION IS FOUND IN THE FIELD.

6) THE CONTRACTOR IS TO FIELD VERIFY THE LOCATION AND ELEVATIONS OF EXISTING MANHOLES AND OTHER UTILITIES PRIOR TO STAKING AND CONSTRUCTION.

7) CALL BLUESTAKES AT LEAST 48 HOURS PRIOR TO DIGGING. DO NOT PROCEED UNTIL BLUESTAKES ARE MARKED.

8) IT SHALL BE THE CONTRACTOR'S AND SUBCONTRACTOR'S RESPONSIBILITY TO MEET ALL APPLICABLE HEALTH AND SAFETY REGULATIONS, AND THEY SHALL ASSUME SOLE RESPONSIBILITY FOR JOB-SITE CONDITIONS DURING CONSTRUCTION OF THIS PROJECT, SO THAT ALL EMPLOYEES ARE PROVIDED A SAFE PLACE TO WORK, AND THE PUBLIC IS PROTECTED.

Know what's **below.**
Call 811 before you dig.

BLUE STAKES OF UTAH
UTILITY NOTIFICATION CENTER, INC.
www.bluestakes.org
1-800-662-4111

BENCHMARK MONUMENT AT 800N CIRCLE
ELEVATION 4247.75

PRELIMINARY
NOT FOR CONSTRUCTION

1470 South 600 West
Woods Cross, UT 84010
Phone 801.298.2236
www.Entellus.com
Entellus

DEVELOPER
ERIC WOOD
Contact: ERIC WOOD

Phone: 801-971-7086
ERICROBERTWOOD@GMAIL.COM

PRELIMINARY NOT FOR CONSTRUCTION

PHEASANTBROOK PH 6 ADDITION

265 PHEASANTBROOK DRIVE
PARCEL # 020340093 PHEASANTBROOK PUD PHASE IV
LOCATED IN SECTION 7, T.2N., R.1E., S.L.B.&M.
CENTERVILLE CITY, DAVIS COUNTY, UTAH

REVISIONS

DRAWN: CSA	2023-05-22
APPROVED: ---	2023-05-22
PROJECT #:	2009002
SET 2009002 23-05-03.dwg	

C100
COVER

\\Entellus-DC-UTAH\2009002\D_PRODUCTION\Civil\04_Plan Set\SET 2009002 23-05-03.dwg 2023-05-22 3:26:40 PM CHRISTOPHER ARGYLE

GENERAL NOTES

1. ALL IMPROVEMENTS SHALL COMPLY WITH THE STANDARDS AND REGULATIONS OF THE LOCAL GOVERNING MUNICIPALITY. CONTACT THE PUBLIC WORKS OFFICE BEFORE BEGINNING.
2. CONTRACTOR TO FIELD VERIFY LOCATION, SIZE, AND AVAILABILITY OF EXISTING UTILITIES. UTILITIES DAMAGED DURING CONSTRUCTION SHALL BE REPAIRED BY THE CONTRACTOR AT HIS/HER EXPENSE. SEE UTILITY NOTE 3.
3. ALL DIMENSIONS ARE IN FOOT UNITS AND ARE TO THE TOP BACK OF CURB UNLESS SHOWN OR NOTED OTHERWISE.
4. PROVIDE HANDICAP RAMPS AT ENDS OF WALKWAYS. END 0.1' ABOVE FLOWLINE OF CURB.
5. CURB AND GUTTER SHALL BE AS PER APWA STD DWG NO 205 TYPE A.
6. UTILITY INFORMATION INDICATED ON DRAWING IS BASED UPON VISUAL OBSERVATION OR INFORMATION FURNISHED BY MUNICIPAL AUTHORITIES WHICH MAY NOT BE VALID. LATERAL LOCATIONS AND ELEVATIONS ARE ASSUMED. SEE UTILITY NOTE 3.
7. ALL GRADING SHALL BE DONE UNDER THE SUPERVISION OF A QUALIFIED SOILS ENGINEER WHO SHALL VERIFY THAT ALL FILL HAS BEEN PLACED IN ACCORDANCE WITH PROVISIONS IN CURRENT INTERNATIONAL BUILDING CODE.
8. COMPACTION TEST REPORTS SHALL BE MADE AVAILABLE TO THE ENGINEER WITHIN 24 HOURS OF A REQUEST. FINAL REPORTS AS SPECIFIED IN CURRENT INTERNATIONAL BUILDING CODE SHALL BE SUBMITTED TO THE ENGINEER WITHIN TEN DAYS AFTER COMPLETION OF GRADING.
9. ALL STORM DRAIN PIPE SHALL BE INSTALLED ACCORDING TO THE MANUFACTURER'S RECOMMENDATIONS AND THE LOCAL GOVERNING MUNICIPALITY'S STANDARDS AND SPECIFICATIONS.
10. STORM DRAIN PIPE WITHIN THE PUBLIC RIGHT-OF-WAY SHALL CONFORM TO THE RIGHT-OF-WAY OWNER'S SPECIFICATIONS.
    PRIVATE STORM DRAIN PIPE OPTIONS SHALL CONSIST OF THE FOLLOWING MATERIALS.
    1. PVC PIPE, ASTM D3034, SDR 35, BELL & SPIGOT TYPE.
    2. RCP PIPE, CLASS 3, BELL & SPIGOT TYPE.
    3. HIGH DENSITY CORRUGATED POLYETHYLENE SMOOTH INTERIOR PIPE, ASTM D3350 WITH WATERTIGHT JOINTS.
11. THE CONTRACTOR SHALL VERIFY ALL DIMENSIONS AND CHECK CONDITIONS AT THE SITE BEFORE STARTING WORK AND SHALL IMMEDIATELY NOTIFY THE ENGINEER OF ANY DISCREPANCIES.
12. TYPICAL DETAILS SHALL APPLY IN GENERAL CONSTRUCTION UNLESS SPECIFICALLY DETAILED. WHERE NO DETAILS ARE GIVEN, CONSTRUCTION WILL BE AS FOR SIMILAR WORK. DO NOT SCALE DRAWINGS.
13. ANY OMISSIONS OR CONFLICTS BETWEEN THE VARIOUS ELEMENTS OF THE WORKING DRAWINGS AND/OR SPECIFICATIONS SHALL BE BROUGHT TO THE ATTENTION OF THE ENGINEER BEFORE PROCEEDING WITH ANY WORK INVOLVED.
14. PIPE BEDDING SHALL BE 3/8" MAXIMUM AGGREGATE. USE 3/4" MAXIMUM SIZE ROAD BASE FOR BACKFILL MATERIAL. COMPACT TO 95% STANDARD PROCTOR DENSITY. MAXIMUM LIFT 8 INCHES.
15. CONTRACTOR SHALL BE RESPONSIBLE FOR ALL PUBLIC AND OSHA STANDARDS.
16. ALL WORK SHALL COMPLY WITH THE AMERICAN PUBLIC WORKS ASSOCIATION UTAH CHAPTER (APWA) MANUAL OF STANDARD SPECIFICATIONS 2007 EDITION WITH ALL PERTINENT SUPPLEMENTS AND AMENDMENTS AND THE MANUAL OF STANDARD PLANS 2007 EDITION. SAID STANDARD SPECIFICATIONS AND PLANS SHALL BE THE REQUIREMENTS.
17. IT IS INTENDED THAT THESE PLANS AND SPECIFICATIONS REQUIRE ALL LABOR AND MATERIALS NECESSARY AND PROPER FOR THE WORK CONTEMPLATED AND THE WORK TO BE COMPLETED IN ACCORDANCE WITH THEIR TRUE INTENT AND PURPOSE. THE CONTRACTOR SHALL NOTIFY THE ENGINEER IMMEDIATELY REGARDING ANY DISCREPANCIES OR AMBIGUITIES WHICH EXIST IN THE PLANS OR SPECIFICATIONS. THE ENGINEER'S INTERPRETATION THEREOF SHALL BE CONCLUSIVE. THE CONTRACTOR SHALL BE HELD RESPONSIBLE FOR ANY FIELD CHANGES MADE WITHOUT PRIOR WRITTEN AUTHORITY FROM THE OWNER AND/OR ENGINEER.
18. THE CONTRACTOR SHALL BE RESPONSIBLE FOR ADEQUATELY SCHEDULING INSPECTION AND TESTING OF ALL FACILITIES CONSTRUCTED UNDER THIS CONTRACT. ALL TESTING SHALL CONFORM TO THE REGULATORY AGENCY'S STANDARD SPECIFICATIONS. ALL TESTING AND INSPECTION SHALL BE PAID FOR BY THE OWNER; ALL RE-TESTING AND/OR REINSPECTION SHALL BE PAID FOR BY THE CONTRACTOR.
19. THE CONTRACTOR SHALL MAINTAIN A NEATLY MARKED SET OF FULL-SIZE AS-BUILT RECORD DRAWINGS SHOWING THE FINAL LOCATION AND LAYOUT OF ALL MECHANICAL; ELECTRICAL AND INSTRUMENTATION EQUIPMENT; PIPING AND CONDUITS; STRUCTURES AND OTHER FACILITIES. THE AS-BUILTS OF THE ELECTRICAL SYSTEM SHALL INCLUDE THE STREET LIGHT LAYOUT PLAN SHOWING LOCATION OF LIGHTS, CONDUITS, CONDUCTORS, POINTS OF CONNECTIONS TO SERVICES, PULLBOXES, AND WIRE SIZES. AS-BUILT RECORD DRAWINGS SHALL REFLECT CHANGE ORDERS, ACCOMMODATIONS, AND ADJUSTMENTS TO ALL IMPROVEMENTS CONSTRUCTED. WHERE NECESSARY, SUPPLEMENTAL DRAWINGS SHALL BE PREPARED AND SUBMITTED BY THE CONTRACTOR.
20. PRIOR TO ACCEPTANCE OF THE PROJECT, THE CONTRACTOR SHALL DELIVER TO ENGINEER, ONE SET OF NEATLY MARKED AS-BUILT RECORD DRAWINGS SHOWING THE INFORMATION REQUIRED ABOVE. AS-BUILT RECORD DRAWINGS SHALL BE REVIEWED AND THE COMPLETE AS-BUILT RECORD DRAWING SET SHALL BE CURRENT WITH ALL CHANGES AND DEVIATIONS REDLINED AS A PRECONDITION TO THE FINAL PROGRESS PAYMENT APPROVAL AND/OR FINAL ACCEPTANCE.

SEQUENCE OF CONSTRUCTION

1. CONSTRUCTION EXIT IS TO BE CONSTRUCTED AT TIME OF ENTRY TO SITE.
2. CLEAR AND GRUB AREAS FOR SEDIMENT MEASURES.
3. INSTALL SILT FENCES.
4. COMPLETE CLEARING OF SITE AND BEGIN ROUGH GRADING.
5. FILL AREAS SHALL BE FILLED IN 12 INCH MAXIMUM LIFTS AND COMPACTED TO AT LEAST 95% MAXIMUM DENSITY.
6. DRAINAGE WILL BE CONTROLLED AND GROUND SLOPED SO AS TO DIRECT RUNOFF TO SEDIMENT CONTROLLED INLETS.
7. INSTALL REMAINDER OF STORM DRAIN.
8. INSTALL UTILITY LINES, WATER, ETC.
9. INSTALL CURBS, WALKS, ETC., AND STABILIZE ALL DISTURBED AREAS.
10. INSTALL BASE COURSE.
11. REMOVE SEDIMENT CONTROL MEASURES, CLEAN OUT TEMPORARY SEDIMENTATION BASINS AND REGRADE, CLEAN OUT SEDIMENT TRAPS AND CONVERT THEM TO STORM WATER MANAGEMENT STRUCTURES.
12. PAVE SITE.
13. OWNER TO BE RESPONSIBLE TO CHECK CLEAN OUT INLET BOXES FOR SEDIMENT AND OIL AND CLEAN AS NECESSARY

UTILITY NOTES

1. ALL SERVICE LATERALS SHALL BE EXTENDED 2 FEET PAST THE 10 FOOT P.U.E.
2. ALL CONSTRUCTION SHALL COMPLY WITH LOCAL GOVERNING MUNICIPALITY DESIGN STANDARDS AND CONSTRUCTION SPECIFICATIONS
3. LOCATIONS OF ALL UNDERGROUND UTILITIES SHOWN ARE APPROXIMATE LOCATIONS. CONTRACTOR IS TO FIELD VERIFY CONNECTION POINTS WITH EXISTING UTILITIES, INCLUDING LOCATIONS AND INVERT ELEVATIONS OF ALL EXISTING STRUCTURES OR PIPES, BEFORE STAKING OR CONSTRUCTING ANY NEW UTILITIES. CONTRACTOR IS RESPONSIBLE FOR ANY DAMAGE CAUSED TO EXISTING UTILITIES AND UTILITY STRUCTURE THAT ARE TO REMAIN.
4. CONTRACTOR IS RESPONSIBLE TO EXPOSE ALL UTILITY SERVICES STUBBED INTO PROJECT PROPERTY AND GIVE ENTELLUS. 48 HOURS PRIOR NOTICE SO ENTELLUS CAN VERIFY DEPTHS AND INVERT ELEVATIONS TO DETERMINE IF CONFLICTS EXIST. ALSO ANY EXISTING UTILITIES THAT RUN ACROSS PROJECT PROPERTY WHICH MAY CAUSE POTENTIAL CONFLICT NEED TO BE EXPOSED AND LOCATED BOTH HORIZONTALLY AND VERTICALLY. CONTRACTOR PROCEEDS AT OWN RISK IF ENTELLUS IS NOT NOTIFIED TO FIELD VERIFY THE ABOVE MENTIONED CONDITIONS.
5. CONTRACTOR IS TO COORDINATE ALL UTILITIES WITH MECHANICAL DRAWINGS WHERE APPLICABLE.
6. NO GROUNDWATER OR DEBRIS TO BE ALLOWED TO ENTER THE NEW PIPE DURING CONSTRUCTION. THE OPEN END OF ALL PIPES IS TO BE COVERED AND EFFECTIVELY SEALED AT THE END OF EACH DAYS WORK.
7. IT SHALL BE THE CONTRACTOR'S RESPONSIBILITY TO INSTALL PIPE OF ADEQUATE CLASSIFICATION WITH SUFFICIENT BEDDING TO MEET ALL REQUIREMENTS AND RECOMMENDATIONS FOR H-20 LOAD REQUIREMENTS.
8. ALL NEW SANITARY SEWER CONSTRUCTION TO BE DONE IN ACCORDANCE WITH LOCAL GOVERNING MUNICIPALITY STANDARDS & SPECIFICATIONS.
9. ALL SEWER LINES AND LATERALS ARE TO BE SDR 35 PVC PIPE.
10. SEWER LATERALS WILL BE INSTALLED AT A UNIFORM SLOPE OF NOT LESS THAN 2% GRADE AND THEY SHALL HAVE A MINIMUM OF 4 FEET OF COVER, UNLESS OTHERWISE NOTED.
11. ALL NEW CULINARY AND IRRIGATION WATER CONSTRUCTION TO BE DONE IN ACCORDANCE WITH LOCAL GOVERNING MUNICIPALITY STANDARDS & SPECIFICATIONS.
12. WATER LINES TO BE PVC C-900. WATER LINES SHALL BE A MINIMUM OF 10' HORIZONTALLY FROM SEWER MAINS. CROSSINGS SHALL MEET STATE HEALTH STANDARDS. (MECHANICAL JOINTS REQUIRED WHEN LESS THAN 18" VERTICAL OR 10' HORIZONTAL SEPARATION FROM SEWER LINES.)
13. ALL WATER LINES SHALL BE 8" MINIMUM SIZE AND SERVICE LATERALS SHALL BE 1-1/2" MINIMUM UNLESS OTHERWISE NOTED.
14. WATER SERVICE LATERALS TO INCLUDE ALL BRASS SADDLE; CORP. STOP LATERAL, DOUBLE CHECK VALVE AND BACKFLOW PREVENTION DEVICE, AND SHUTOFF VALVE IN BOX NEAR BUILDING EDGE.
15. ALL WATER LINES SHALL BE A MINIMUM 48" BELOW FINISH GROUND TO TOP OF PIPE. ALL VALVE BOXES AND MANHOLES SHALL BE RAISED OR LOWERED TO FINISH GRADE AND SHALL INCLUDE A CONCRETE COLLAR IN PAVED AREAS.
16. CONTRACTOR TO NOTIFY PUBLIC UTILITIES FOR CHLORINE TEST PRIOR TO FLUSHING LINES, CHLORINE LEFT IN PIPE 24 HOURS MINIMUM WITH 25 PPM RESIDUAL. ALL TURNING OF MAINLINE VALVES, CHLORINATION, FLUSHING, PRESSURE TESTING, BACTERIA TESTING, ETC. TO BE COORDINATED WITH LOCAL GOVERNING MUNICIPALITY. ALL TESTS TO BE IN ACCORDANCE WITH AWWA STANDARDS.
17. BOTTOM FLANGE OF FIRE HYDRANTS TO BE SET TO APPROXIMATELY 4" INCHES ABOVE BACK OF CURB ELEVATION. HYDRANTS TO INCLUDE TEE, 6" LINE VALVE, AND HYDRANT COMPLETE TO MEET CITY STANDARDS.
18. ALL NEW STORM DRAIN/LAND DRAIN CONSTRUCTION TO BE DONE IN ACCORDANCE WITH LOCAL GOVERNING MUNICIPALITY STANDARDS & SPECIFICATIONS.
19. ALL STORM WATER CONVEYANCE PIPING TO BE RCP - CLASS 3 OR EQUAL, UNLESS OTHERWISE NOTED.
20. CONTRACTOR IS TO SUBMIT SITE PLAN/SUBDIVISION PLAT TO DOMINION ENERGY GAS FOR DESIGN OF GAS SERVICE TO BUILDINGS/LOTS. CONTRACTOR TO COORDINATE WITH DOMINION ENERGY GAS FOR CONTRACTOR LIMITS OF WORK VERSUS DOMINION ENERGY GAS LIMITS.
21. ALL GAS LINE TAPS TO BE HDPE WITH COPPER TRACER WIRE AND DETECTA TAPE. TERMINATE TRACER WIRE AT APPROVED LOCATIONS.
22. ALL GAS LINE TAPS, VALVES AND CAPS TO BE FUSED USING ELECTRO-FUSION TECHNOLOGY.
23. ALL ELECTRICAL CONDUITS/LINES TO BE PVC SCH 40 OR BETTER.
24. ALL PHONE AND TV CONDUITS TO BE PVC SCH 40 OR BETTER.
25. CONTRACTOR IS TO SUBMIT SITE PLAN/SUBDIVISION PLAT TO COMCAST FOR DESIGN OF CABLE TV SERVICE TO BUILDINGS/LOTS. CONTRACTOR TO COORDINATE WITH COMCAST FOR CONTRACTOR LIMITS OF WORK VERSES COMCAST LIMITS.
26. CONTRACTOR IS TO COORDINATE LOCATIONS OF NEW TELEPHONE SERVICE TO NEW BUILDINGS OR LOTS WITH CENTURYLINK. A PVC CONDUIT, PLYWOOD BACKBOARD, AND GROUND WIRE IS REQUIRED FOR SERVICE THROUGH PROPERTY. COORDINATE SIZES AND LOCATION WITH CENTURYLINK.
27. ALL UTILITIES ARE TO BE INSTALLED IN ACCORDANCE WITH THE CORRESPONDING AGENCY/DISTRICT STANDARDS AND SPECIFICATIONS:
    WATER - CENTERVILLE CITY
    SEWER - CENTERVILLE CITY
    STORM DRAIN - CENTERVILLE CITY
    IRRIGATION - CENTERVILLE CITY
    ELECTRICAL - ROCKY MOUNTAIN POWER
    TELEPHONE - CENTURYLINK
    NATURAL GAS - DOMINION ENERGY

GRADING NOTES

1. SITE GRADING SHALL BE PERFORMED IN ACCORDANCE WITH THESE PLANS AND SPECIFICATIONS AND THE RECOMMENDATIONS SET FORTH IN THE SOILS REPORT. THE CONTRACTOR SHALL BE RESPONSIBLE FOR REMOVING AND REPLACING ALL SOFT, YIELDING OR UNSUITABLE MATERIALS AND REPLACING IT WITH SUITABLE MATERIALS AS SPECIFIED IN THE SOILS REPORT. ALL EXCAVATED OR FILLED AREAS SHALL BE COMPACTED TO 95% OF MODIFIED PROCTOR MAXIMUM DENSITY PER ASTM TEST D-1557 EXCEPT UNDER BUILDING FOUNDATION WHERE IT SHALL BE 95% MIN. OF MAXIMUM DENSITY. MOISTURE CONTENT AT TIME OF PLACEMENT SHALL NOT EXCEED 2% ABOVE NOR 3% BELOW OPTIMUM. CONTRACTOR SHALL SUBMIT A COMPACTION REPORT PREPARED BY A QUALIFIED REGISTERED SOILS ENGINEER, VERIFYING THAT ALL FILLED AREAS AND SUBGRADE AREAS WITHIN THE BUILDING PAD AREA AND AREAS TO BE PAVED, HAVE BEEN COMPACTED IN ACCORDANCE WITH THESE PLANS AND SPECS AND THE RECOMMENDATIONS SET FORTH IN THE SOILS. REPORT.
2. THE CONTRACTOR IS TO USE BEST MANAGEMENT PRACTICES FOR PROVIDING EROSION CONTROL FOR CONSTRUCTION OF THE PROJECT. SPECIFIC DETAILS SHOWN SHALL BE USED IN COMBINATION WITH OTHER ACCEPTED LOCAL PRACTICES.
3. EXISTING UNDERGROUND UTILITIES AND IMPROVEMENTS ARE SHOWN IN THEIR APPROXIMATE LOCATIONS BASED UPON RECORD INFORMATION AVAILABLE AT THE TIME OF PREPARATION OF PLANS. LOCATIONS MAY NOT HAVE BEEN VERIFIED IN THE FIELD AND NO GUARANTEE IS MADE AS TO ACCURACY OR COMPLETENESS OF THE INFORMATION SHOWN ON THESE PLANS OR INDICATED IN THE FIELD BY LOCATING SERVICES. ANY ADDITIONAL COSTS INCURRED AS A RESULT OF CONTRACTOR'S FAILURE TO VERIFY LOCATIONS OF EXISTING UTILITIES PRIOR TO BEGINNING OF CONSTRUCTION IN THEIR VICINITY SHALL BE BORNE BY THE CONTRACTOR AND ASSUMED INCLUDED IN THE CONTRACT.
4. IF AT ANY TIME DURING CONSTRUCTION ANY UNFAVORABLE GEOLOGICAL CONDITIONS ARE ENCOUNTERED, WORK IN THAT AREA WILL STOP UNTIL APPROVED CORRECTIVE MEASURES ARE OBTAINED FROM THE ENGINEER.
5. THE CONTRACTOR IS RESPONSIBLE FOR PROVIDING HIS/HER OWN ESTIMATE OF EARTHWORK QUANTITIES.
6. WHERE NEW CURB AND GUTTER IS BEING CONSTRUCTED ADJACENT TO EXISTING ASPHALT OF CONCRETE PAVEMENT, THE FOLLOWING SHALL APPLY:
   - PRIOR TO PLACEMENT OF ANY CONCRETE THE CONTRACTOR SHALL HAVE A LICENSED SURVEYOR VERIFY THE GRADE AND CROSS SLOPE OF THE CURB AND GUTTER FORMS.
   - THE CONTRACTOR SHALL SUBMIT THE SLOPE AND GRADES TO THE ENGINEER FOR APPROVAL PRIOR TO THE PLACEMENT OF CONCRETE.
   - THE CONTRACTOR SHALL NOTIFY THE ENGINEER IMMEDIATELY OF ANY SECTION WHICH DOES NOT CONFORM TO THE DESIGN OR TYPICAL CROSS SECTION.
   - THE CONTRACTOR SHALL BE SOLELY RESPONSIBLE FOR CURB AND GUTTER POURS WITHOUT THE APPROVAL OF THE ENGINEER.

EROSION CONTROL

1. ALL EROSION AND SEDIMENT CONTROL MEASURES ARE TO BE CONSTRUCTED AND MAINTAINED IN ACCORDANCE WITH THE STANDARDS AND REGULATIONS OF THE LOCAL GOVERNING MUNICIPALITY.
2. ALL SEDIMENT CONTROL MEASURES TO BE ADJUSTED TO MEET FIELD CONDITIONS AT THE TIME OF CONSTRUCTION AND CONSTRUCTED PRIOR TO ANY GRADING OR DISTURBANCE OF EXISTING SURFACE MATERIAL ON BALANCE OF SITE.
3. DAILY INSPECTION AND MAINTENANCE OF ALL SEDIMENT CONTROL STRUCTURES MUST BE PROVIDED TO INSURE INTENDED PURPOSE IS ACCOMPLISHED. CONTRACTOR SHALL BE RESPONSIBLE FOR ALL SEDIMENT LEAVING THE PROPERTY. SEDIMENT CONTROL MEASURES SHALL BE IN WORKING CONDITION AT THE END OF EACH WORKING DAY.
4. ALL POINTS OF CONSTRUCTION INGRESS AND EGRESS WILL BE PROTECTED TO PREVENT TRACKING OF MUD ONTO PUBLIC WAYS.
5. ALL SEDIMENT WILL BE PREVENTED FROM ENTERING ANY STORM DRAINAGE SYSTEM THROUGH THE USE OF SANDBAGS, STRAW BALES, SILT FENCES, GRAVEL, BOARDS, AND OTHER APPLICABLE METHODS.
6. ALL DISTURBED AREAS OUTSIDE OF ROADWAYS, PARKING LOTS, SIDEWALKS AND OR BUILDING FOOTPRINTS SHALL BE SEEDED, SODDED AND/OR MULCHED.
7. IF SITE IS READY TO RECEIVE FINAL COVER DURING THE NON-PLANTING SEASON, THEN IT SHALL BE PROTECTED BY MULCHING. THE MULCH WILL REMAIN UNTIL THE NEXT PLANTING SEASON AS DEFINED BY THE LOCAL GOVERNING MUNICIPALITY.
8. RE-VEGETATE ALL DENUDED AREAS AS PER THE STANDARDS AND REGULATIONS OF THE LOCAL GOVERNING MUNICIPALITY.
9. THE CONTRACTOR AGREES THAT:

A. THEY SHALL BE RESPONSIBLE TO CLEAN THE JOB SITE AT THE END OF EACH PHASE OF WORK.

B. THEY SHALL BE RESPONSIBLE TO REMOVE AND DISPOSE OF ALL TRASH, SCRAP AND UNUSED MATERIAL AT THEIR OWN EXPENSE IN A TIMELY MANNER.

C. THEY SHALL BE RESPONSIBLE TO MAINTAIN THE SITE IN A NEAT, SAFE AND ORDERLY MANNER AT ALL TIMES.

D. THEY SHALL BE RESPONSIBLE TO KEEP MATERIALS, EQUIPMENT, AND TRASH OUT OF THE WAY OF OTHER CONTRACTORS SO AS NOT TO DELAY THE JOB. FAILURE TO DO SO WILL RESULT IN A DEDUCTION FOR THE COST OF CLEAN UP FROM FINAL PAYMENT.

E. THEY SHALL BE RESPONSIBLE FOR THEIR OWN SAFETY, TRAFFIC CONTROL. PERMITS, RETESTING AND REINSPECTION AT THEIR OWN EXPENSE.

F. UNLESS OTHERWISE NOTED ALL EXCESS SOILS AND MATERIALS SHALL BECOME THE PROPERTY OF THE CONTRACTOR AND SHALL BE LAWFULLY DISPOSED OF OFF SITE AT THE CONTRACTOR'S EXPENSE.

G. THE CONTRACTOR SHALL PROVIDE ALL LIGHTS, BARRICADES, SIGNS, FLAG-MEN OR OTHER DEVICES NECESSARY FOR PUBLIC SAFETY.

LEGEND

SECTION CORNER
MONUMENT
30.82 / 30.82 — EXISTING SPOT ELEVATION
30.82 / 30.82 — PROPOSED SPOT ELEVATION
1.5% — DOWNWARD GRADE
(4258) — EXISTING INDEX CONTOUR
EXISTING MINOR CONTOUR
4258 — PROPOSED CONTOUR
PROPOSED MINOR CONTOUR
LOT OR BOUNDARY LINE
PUBLIC UTILITY EASEMENT
BUILDABLE AREA SETBACK
CENTER LINE OF ROAD
X — EXISTING FENCE
X — PROPOSED FENCE
EXISTING BUILDING
PROPOSED BUILDING
EXISTING ASPHALT
PROPOSED ASPHALT
EXISTING CONCRETE
PROPOSED CONCRETE
EXISTING CURB & GUTTER
PROPOSED CURB & GUTTER
ADA PARKING
STREET LIGHT
PWR / PWR — POWER POLE
TEL / TEL — TELEPHONE POLE
UTIL / UTIL — UTILITY POLE
STREET SIGN
EXISTING RETAINING WALL
PROPOSED RETAINING WALL
EXISTING ROCK WALL
PROPOSED ROCK WALL
FO — EXISTING FIBER OPTIC
FO — PROPOSED FIBER OPTIC
GAS — EXISTING NATURAL GAS
GAS — PROPOSED NATURAL GAS
PWR — EXISTING POWER
PWR — PROPOSED POWER
OHP — EXISTING OVERHEAD POWER
OHP — PROPOSED OVERHEAD POWER
UGP — EXISTING UNDERGROUND POWER
UGP — PROPOSED UNDERGROUND POWER
TEL — EXISTING TELEPHONE
TEL — PROPOSED TELEPHONE
IRR — EXISTING IRRIGATION LINE
IRR — PROPOSED IRRIGATION LINE
IRRIGATION MANHOLE
IRRIGATION METER
BLOWOFF
VALVE
TEE
ELBOW
REDUCER
THRUST BLOCK

LEGEND

WTR — EXISTING WATER LINE
WTR — PROPOSED WATER LINE
WATER MANHOLE
WATER METER
FIRE HYDRANT
BLOWOFF
VALVE
TEE
ELBOW
REDUCER
THRUST BLOCK
SS — EXISTING SEWER LINE
SS — PROPOSED SEWER LINE
SEWER MANHOLE
LD — EXISTING LAND DRAIN
LD — PROPOSED LAND DRAIN
LAND DRAIN MANHOLE
SD — EXISTING STORM DRAIN
SD — PROPOSED STORM DRAIN
STORM DRAIN MANHOLE
CATCH BASIN / CLEANOUT
CURB INLET

ABBREVIATIONS

ø	DIAMETER
Δ	DELTA
°	DEGREES
'	MINUTES, FEET
"	SECONDS, INCHES
ADA	AMERICAN DISABILITIES ACT
ADS	CORRUGATED BLACK PLASTIC PIPE
APWA	AMERICAN PUBLIC WORKS ASSOCIATION
ARCH	ARCHITECT, ARCHITECTURAL
ASTM	AMERICAN SOCIETY FOR TESTING AND MATERIALS
AWWA	AMERICAN WATER WORKS ASSOCIATION
B&C	BAR & CAP
BLA	BOUNDARY LINE AGREEMENT
BLDG	BUILDING
BM	BENCHMARK
BND	BOUNDARY
BOW	BACK OF WALK
BRG	BEARING
BV	BUTTERFLY VALVE
C&G	CURB AND GUTTER
CB	CATCH BASIN
CH	CHORD
CHB	CHORD BEARING
CI	CAST IRON
CIP	CAST IN PLACE
CL	CENTERLINE
CMP	CORRUGATED METAL PIPE
CO	CLEANOUT
COMM	COMMUNICATIONS
CONC	CONCRETE
CONST	CONSTRUCTION
CUL	CULINARY
CW	CULINARY WATER
CWL	CULINARY WATERLINE
DEMO	DEMOLITION
DI	DUCTILE IRON
DIAM	DIAMETER
DIST	DISTANCE
DWG	DRAWING
E	EAST, ELECTRICITY, ELECTRICAL
EASE	EASEMENT
EG	EXISTING GRADE
EL	ELBOW
ELEC	ELECTRICAL
ELEV	ELEVATION
EOA	EDGE OF ASPHALT
EVC	END VERTICAL CURVE
EVCE	END VERTICAL CURVE ELEVATION
EVCS	END VERTICAL CURVE STATION
EX	EXISTING
FFE	FINISH FLOOR ELEVATION
FG	FINISH GRADE
FH	FIRE HYDRANT
FL	FLOWLINE FND FOUNDATION
FP	FIRE PROTECTION
FTG	FOOTING
G	GAS, NATURAL GAS
GB	GRADE BREAK
GV	GATE VALVE
HDPE	HIGH-DENSITY POLYETHYLENE PIPE
HP	HIGH POINT
HPE	HIGH POINT ELEVATION

ABBREVIATIONS

HPS	HIGH POINT STATION
ID	INSIDE DIAMETER
IE	INVERT ELEVATION
INV	INVERT
IRR	IRRIGATION
IRRMH	IRRIGATION MANHOLE
K	RADIUS OF CURVATURE
L	LENGTH
LAT	LATERAL SERVICE
LD	LAND DRAIN
LDMH	LAND DRAIN MANHOLE
LF	LINEAL FEET
LG	LIP OF GUTTER
LP	LOW POINT
LP	LIGHT POLE
LPE	LOW POINT ELEVATION
MECH	MECHANICAL
MH	MANHOLE
MON	MONUMENT
NE	NORTHEAST
NW	NORTHWEST
OD	OUTSIDE DIAMETER
OHP	OVERHEAD POWER
OSHA	OCCUPATIONAL SAFETY AND HEALTH ADMINISTRATION
PC	POINT OF CURVATURE
PCC	PORTLAND CONCRETE CEMENT
PI	POINT OF INFLECTION
PL	PROPERTY LINE
PPM	PARTS PER MILLION
PROP	PROPERTY
PT	POINT OF TANGENCY
PUE	PUBLIC UTILTIY EASEMENT
PUE&DE	PUBLIC UTILITY EASEMENT & DRAINAGE EASEMENT
PVC	POLYVINYL CHLORIDE
PVI	POINT OF VERTICAL INFLECTION
R	RADIUS
RC	REBAR & CAP
RCL	ROADWAY CENTERLINE
RCP	REINFORCED CONCRETE PIPE
ROW	RIGHT OF WAY
SD	STORM DRAIN
SDCB	STORM DRAIN CATCH BASIN
SDCO	STORM DRAIN CLEANOUT
SDMH	STORM DRAIN MANHOLE
SDR	STANDARD DIMENSION RATIO
SE	SOUTHEAST
SEC	SECONDARY, SECTION
SL	STREET LIGHT
SLB&M	SALT LAKE BASE & MERIDIAN
SPEC	SPECIFICATION
SPP	STEEL PIPE
SS	SANITARY SEWER
SSCO	SANITARY SEWER CLEANOUT
SSMH	SANITARY SEWER MANHOLE
STD	STANDARD
SW	SECONDARY WATER
SW	SOUTHWEST
SWL	SECONDARY WATERLINE
SWPPP	STORMWATER POLLUTION PREVENTION PLAN
TAN	TANGENT
TB	THRUST BLOCK
TBC	TOP BACK OF CURB
TBW	TOP BACK OF WALK
TEL	TELEPHONE
TCW	TOP OF CURBWALL
TOA	TOP OF ASPHALT
TOC	TOP OF CONCRETE
TOE	TOE OF SLOPE OR WALL
TOG	TOP OF GRATE
TOW	TOP OF WALL
UTIL	UTILITY
UD	UNDERDRAIN
UGP	UNDERGROUND POWER
UP	UTILITY POLLE
VC	VERTICAL CURVE
W	WEST, WATER
W2	SECONDARY WATER
WL	WATERLINE
WM	WATER METER
WP	WORK POINT

Know what's below. Call 811 before you dig.
BLUE STAKES OF UTAH
UTILITY NOTIFICATION CENTER, INC.
www.bluestakes.org
1-800-662-4111

1470 South 600 West
Woods Cross, UT 84010
Phone 801.298.2236
www.Entellus.com
Entellus

DEVELOPER
ERIC WOOD
Contact: ERIC WOOD

Phone: 801-971-7086
ERICROBERTWOOD@GMAIL.COM

PRELIMINARY NOT FOR CONSTRUCTION

PHEASANTBROOK PH 6 ADDITION
265 PHEASANTBROOK DRIVE
PARCEL # 020340093 PHEASANTBROOK PUD PHASE IV
LOCATED IN SECTION 7, T.2N., R.1E., S.L.B&M.
CENTERVILLE CITY, DAVIS COUNTY, UTAH

REVISIONS

DRAWN: CSA	2023-05-22
APPROVED: ---	2023-05-22
PROJECT #:	2009002
SET 2009002 23-05-03.dwg	

C101
NOTES AND LEGEND

\\Entellus-DC-UTAH\2009002\D_PRODUCTION\Civil\04_Plan Set\SET 2009002 23-05-03.dwg 2023-05-22 3:26:44 PM CHRISTOPHER ARGYLE

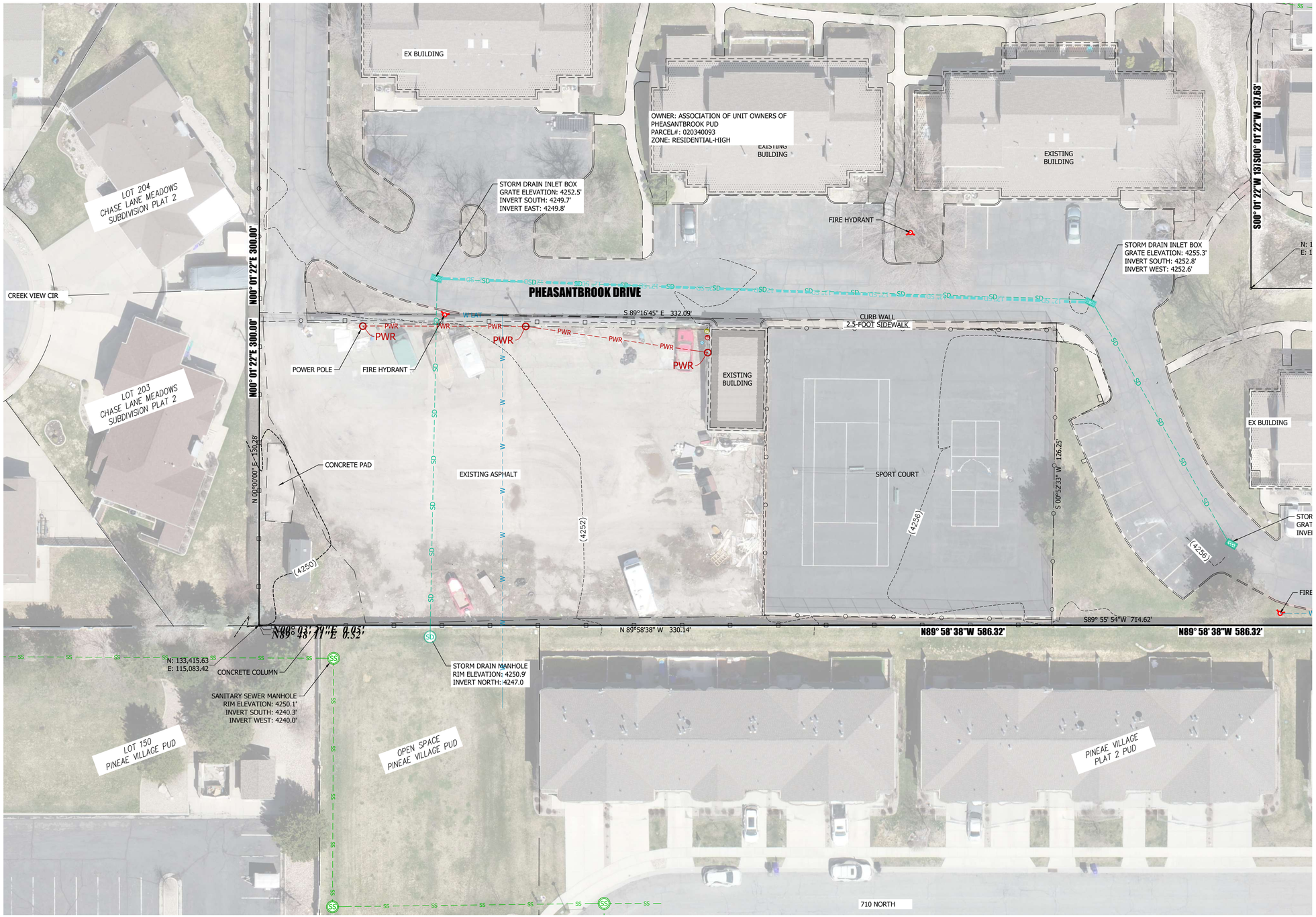

SCALE: 1" = 20'

Know what's **below.**
Call 811 before you dig.

BLUE STAKES OF UTAH
UTILITY NOTIFICATION CENTER, INC.
www.bluestakes.org
1-800-662-4111

1470 South 600 West
Woods Cross, UT 84010
Phone 801.298.2236
www.Entellus.com
Entellus

DEVELOPER

ERIC WOOD
Contact: ERIC WOOD

Phone: 801-971-7086
ERICROBERTWOOD@GMAIL.COM

PRELIMINARY NOT FOR CONSTRUCTION

PHEASANTBROOK PH 6 ADDITION

265 PHEASANTBROOK DRIVE
PARCEL # 020340093 PHEASANTBROOK PUD PHASE IV
LOCATED IN SECTION 7, T.2N., R.1E., S.L.B.&M.
CENTERVILLE CITY, DAVIS COUNTY, UTAH

REVISIONS

DRAWN: CSA	2023-05-22
APPROVED: ---	2023-05-22
PROJECT #:	2009002
SET 2009002 23-05-03.dwg	

C200
TOPOGRAPHY

\\Entellus-DC-UTAH\2009002\D_PRODUCTION\Civil\04_Plan Set\SET 2009002 23-05-03.dwg 2023-05-22 3:26:59 PM CHRISTOPHER ARGYLE

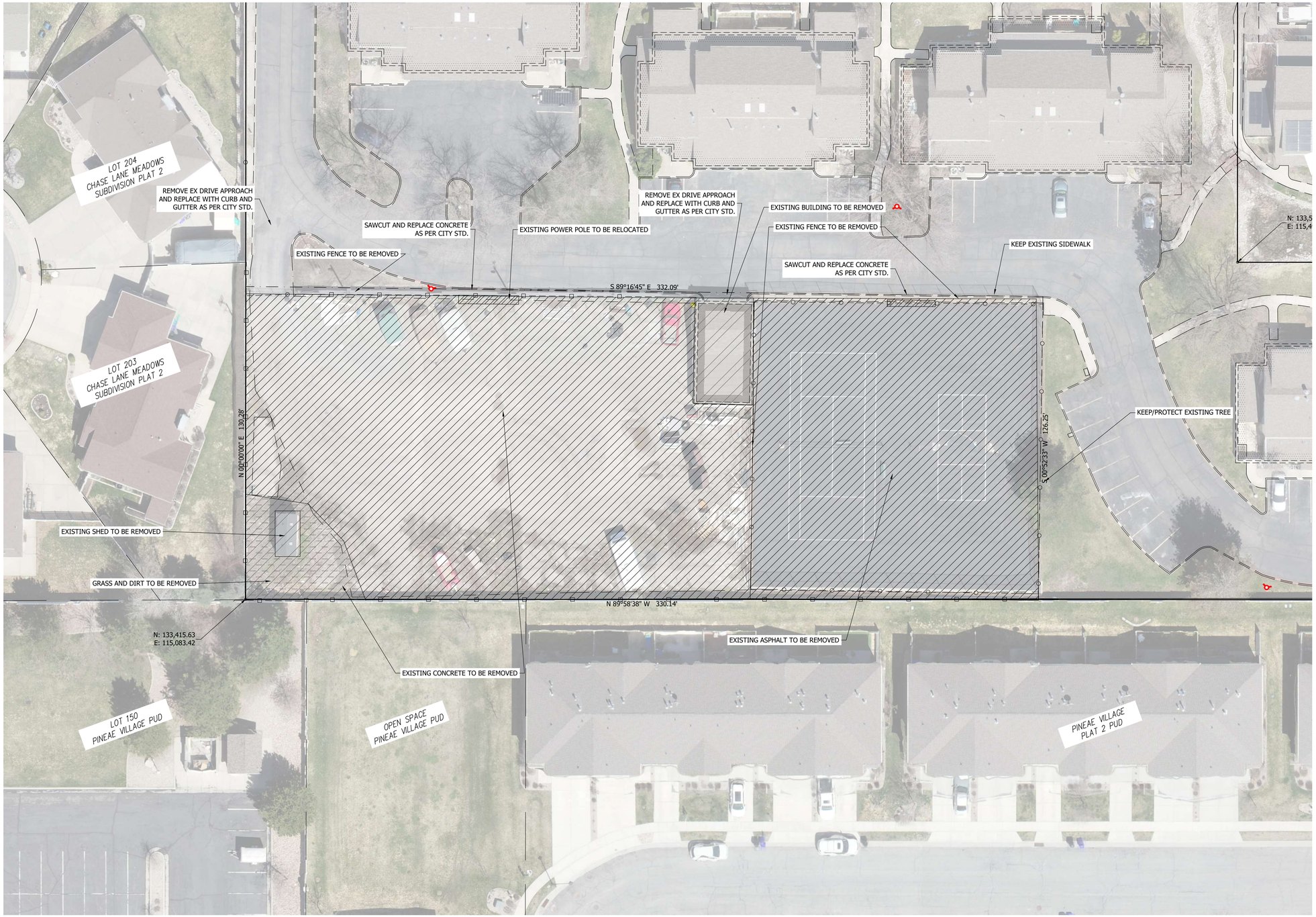

20 0 20 40 60

SCALE: 1" = 20'

DEMOLITION LEGEND

- ASPHALT TO BE REMOVED
- CONCRETE TO BE REMOVED
- STRUCTURE TO BE REMOVED
- CLEAR AND GRUB

Know what's **below.**
Call 811 before you dig.

BLUE STAKES OF UTAH
UTILITY NOTIFICATION CENTER, INC.
www.bluestakes.org
1-800-662-4111

1470 South 600 West
Woods Cross, UT 84010
Phone 801.298.2236
www.Entellus.com
Entellus

DEVELOPER

ERIC WOOD
Contact: ERIC WOOD

Phone: 801-971-7086
ERICROBERTWOOD@GMAIL.COM

PRELIMINARY NOT FOR CONSTRUCTION

PHEASANTBROOK PH 6 ADDITION

265 PHEASANTBROOK DRIVE
PARCEL # 02034-0093 PHEASANTBROOK PUD PHASE IV
LOCATED IN SECTION 7, T.2N., R.1E., S.L.B.&M.
CENTERVILLE CITY, DAVIS COUNTY, UTAH

REVISIONS

DRAWN: CSA	2023-05-22
APPROVED: ---	2023-05-22
PROJECT #:	2009002
SET 2009002 23-05-03.dwg	

C300
DEMO PLAN

\\Entellus-DC-UTAH\2009002\D_PRODUCTION\Civil\04_Plan Set\SET 2009002 23-05-03.dwg 2023-05-22 3:27:10 PM CHRISTOPHER ARGYLE

PHEASANTBROOK PART VI

SCALE: 1" = 20'

AREA TABULATION

	SQ.FT.	ACRES	%
BUILDING	16,104	0.370	38.32%
IMPROVEMENTS	12,199	0.280	29.03%
LANDSCAPE	13,722	0.315	32.65%
TOTAL	42,025	0.965	100.00%

SYMBOL LEGEND

- 205.1 — REMOVE AND REPLACE CITY CURB & GUTTER PER APWA PLAN 205.1, SHEET C902 (TYPE A)
- 231 — REMOVE AND REPLACE CITY SIDEWALK PER APWA PLAN 231, SHEET C902
- 255 — REMOVE AND REPLACE CITY ASPHALT PER APWA PLAN 255, SHEET C902
- A-1 — ACCESSIBLE PARKING AREA & SIDEWALK RAMP PER DETAIL, SHEET C900
- A-2 — INTERNATIONAL ACCESSIBLE PARKING SYMBOL PER DETAIL, SHEET C900
- A-3.1 — ADA PARKING SIGN - VAN ACCESSIBLE TYPE PER DETAIL, SHEET C900
- A-3.2 — ADA PARKING SIGN - RESERVED TYPE PER DETAIL, SHEET C900
- C-1 — PRIVATE ASPHALT SECTION PER DETAIL, SHEET C901
- C-2 — PRIVATE CONCRETE SLAB SECTION PER DETAIL, SHEET C901
- C-3 — PRIVATE CONCRETE CURB & GUTTER PER DETAIL, SHEET C901
- C-4 — PRIVATE CONCRETE CURB WALL PER DETAIL, SHEET C901
- C-5 — PRIVATE CONCRETE WATERWAY PER DETAIL, SHEET C901
- C-6 — PRIVATE CONCRETE SIDEWALK PER DETAIL, SHEET C901
- G-1 — PRIVATE DUMPSTER ENCLOSURE PER DETAIL, SHEET C901
- R-1 — MINOR CONCRETE RETAINING PER DETAIL, SHEET C901
- R-2 — MINOR LANSCAPE RETAINING PER DETAIL, SHEET C901
- GW 2A — REMOVE AND REPLACE CURB & GUTTER PER CITY STD.
- GW 3A — REMOVE AND REPLACE SIDEWALK PER CITY STD.
- GW 3A — NEW CONCRETE DRIVE APPROACH PER CITY STD.

ALL IMPROVEMENTS WITHIN THE PUBLIC RIGHT-OF-WAY SHALL CONFORM TO THE RIGHT-OF-WAY OWNER'S STANDARDS AND SPECIFICATIONS.

ACCESSIBLE AREA CONSTRAINTS

ALL ACCESSIBLE AREAS ARE TO MAINTAIN THE FOLLOWING MAXIMUM SLOPES AND TOLERANCES:

ACCESSIBLE PARKING:
MAXIMUM SLOPE OF 1:48 (2%) THROUGHOUT.

ACCESSIBLE ROUTE:
MINIMUM WIDTH OF 48". MAXIMUM SLOPE OF 1:20 (5%) ALONG THE ROUTE, MAXIMUM CROSS-SLOPE OF 1:48 (2%).

ACCESS ROUTE TURNAROUNDS:
A CLEAR 60" TURNING DIAMETER. MAXIMUM SLOPE OF 1:48 (2%) IN ANY DIRECTION.

LEVEL LANDING / EXTERIOR DOOR LANDING:
MINIMUM SIZE OF 60"X60". MAXIMUM SLOPE OF 1:48 (2%) IN ANY DIRECTION.

ACCESSIBLE EGRESS TO PUBLIC WAY:
MAXIMUM SLOPE OF 1:20 (5%) ALONG THE ROUTE, MAXIMUM CROSS-SLOPE OF 1:48 (2%).

ADA ACCESS RAMPS:
MAXIMUM SLOPE OF 1:12 (8.33%), WITH A MAXIMUM CROSS-SLOPE OF 2%. THE TRANSITION BETWEEN ASPHALT AND CONCRETE IS NOT TO EXCEED 1/2" VERTICAL (1/4" IF BEVELED).

Know what's below.
Call 811 before you dig.
BLUE STAKES OF UTAH
UTILITY NOTIFICATION CENTER, INC.
www.bluestakes.org
1-800-662-4111

1470 South 600 West
Woods Cross, UT 84010
Phone 801.298.2236
www.Entellus.com
Entellus

DEVELOPER
ERIC WOOD
Contact: ERIC WOOD

Phone: 801-971-7086
ERICROBERTWOOD@GMAIL.COM

PRELIMINARY NOT FOR CONSTRUCTION

PHEASANTBROOK PH 6 ADDITION

265 PHEASANTBROOK DRIVE
PARCEL # 02034-0093 PHEASANTBROOK PUD PHASE IV
LOCATED IN SECTION 7, T.2N., R.1E., S.L.B.&M.
CENTERVILLE CITY, DAVIS COUNTY, UTAH

REVISIONS

DRAWN: CSA	2023-05-22
APPROVED: ---	2023-05-22
PROJECT #:	2009002
SET 2009002 23-05-03.dwg	

C400
SITE PLAN

\\Entellus-DC-UTAH\2009002\D_PRODUCTION\Civil\04_Plan Set\SET 2009002 23-05-03.dwg 2023-05-22 3:27:20 PM CHRISTOPHER ARGYLE

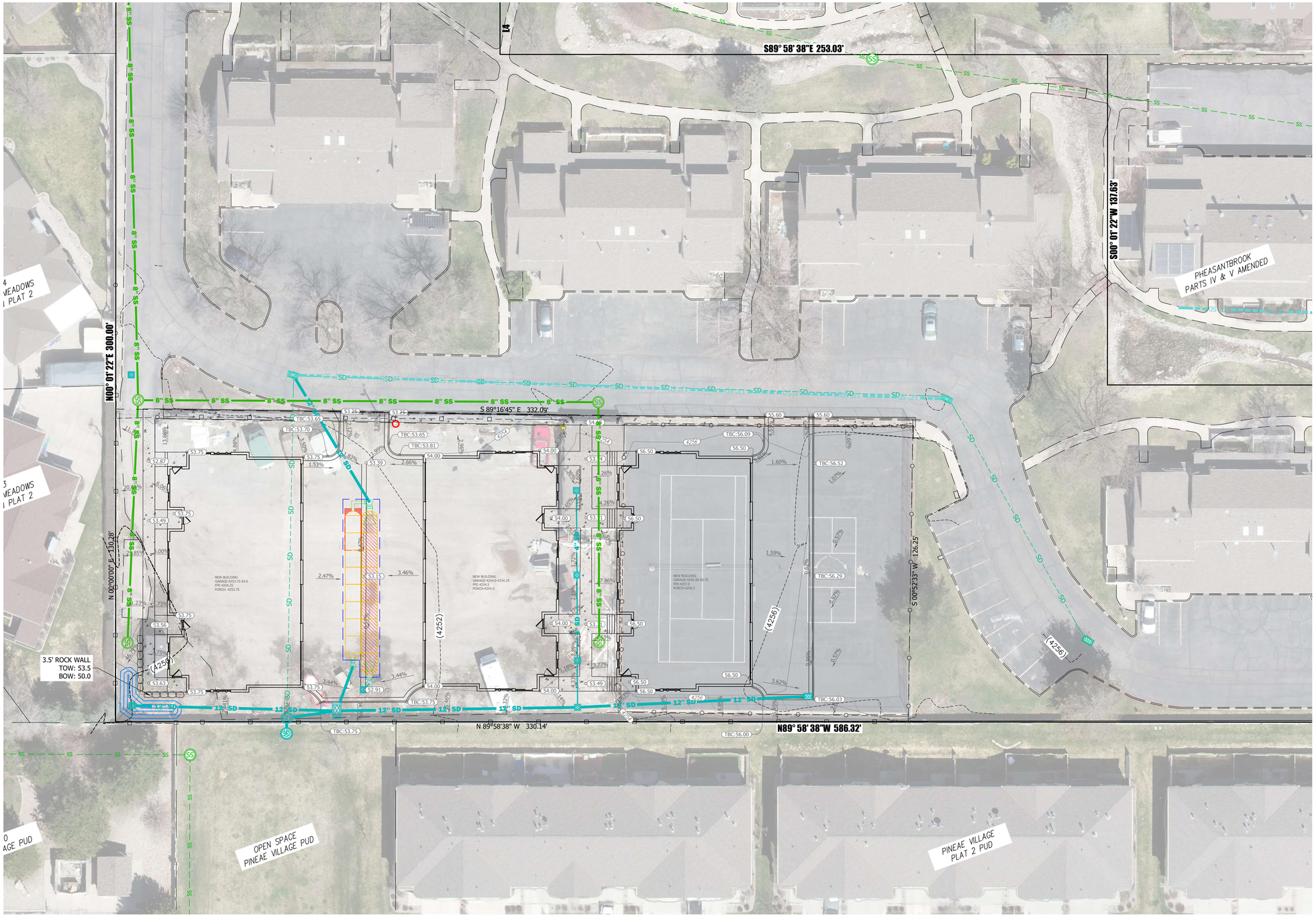

SCALE: 1" = 20'

NOTE;
PROJECT AREA IS IN A MINIMAL FLOOD PLAIN ZONE

ACCESSIBLE AREA CONSTRAINTS

ALL ACCESSIBLE AREAS ARE TO MAINTAIN THE FOLLOWING MAXIMUM SLOPES AND TOLERANCES:

ACCESSIBLE PARKING:
MAXIMUM SLOPE OF 1:48 (2%) THROUGHOUT.

ACCESSIBLE ROUTE:
MINIMUM WIDTH OF 48". MAXIMUM SLOPE OF 1:20 (5%) ALONG THE ROUTE, MAXIMUM CROSS-SLOPE OF 1:48 (2%).

ACCESS ROUTE TURNAROUNDS:
A CLEAR 60" TURNING DIAMETER. MAXIMUM SLOPE OF 1:48 (2%) IN ANY DIRECTION.

LEVEL LANDING / EXTERIOR DOOR LANDING:
MINIMUM SIZE OF 60"X60". MAXIMUM SLOPE OF 1:48 (2%) IN ANY DIRECTION.

ACCESSIBLE EGRESS TO PUBLIC WAY:
MAXIMUM SLOPE OF 1:20 (5%) ALONG THE ROUTE, MAXIMUM CROSS-SLOPE OF 1:48 (2%).

ADA ACCESS RAMPS:
MAXIMUM SLOPE OF 1:12 (8.33%), WITH A MAXIMUM CROSS-SLOPE OF 2%. THE TRANSITION BETWEEN ASPHALT AND CONCRETE IS NOT TO EXCEED 1/2" VERTICAL (1/4" IF BEVELED).

Know what's below.
Call 811 before you dig.
BLUE STAKES OF UTAH
UTILITY NOTIFICATION CENTER, INC.
www.bluestakes.org
1-800-662-4111

1470 South 600 West
Woods Cross, UT 84010
Phone 801.298.2236
www.Entellus.com
Entellus

DEVELOPER

ERIC WOOD
Contact: ERIC WOOD
--
--
Phone: 801-971-7086
ERICROBERTWOOD@GMAIL.COM

PRELIMINARY NOT FOR CONSTRUCTION

PHEASANTBROOK PH 6 ADDITION

265 PHEASANTBROOK DRIVE
PARCEL # 02034-0093 PHEASANTBROOK PUD PHASE IV
LOCATED IN SECTION 7, T.2N., R.1E., S.L.B.&M.
CENTERVILLE CITY, DAVIS COUNTY, UTAH

REVISIONS

DRAWN: CSA	2023-05-22
APPROVED: ---	2023-05-22
PROJECT #:	2009002
SET 2009002 23-05-03.dwg	

C500
GRADING PLAN

\\Entellus-DC-UTAH\2009002\D_PRODUCTION\Civil\04_Plan Set\SET 2009002 23-05-03.dwg 2023-05-22 3:27:31 PM CHRISTOPHER ARGYLE

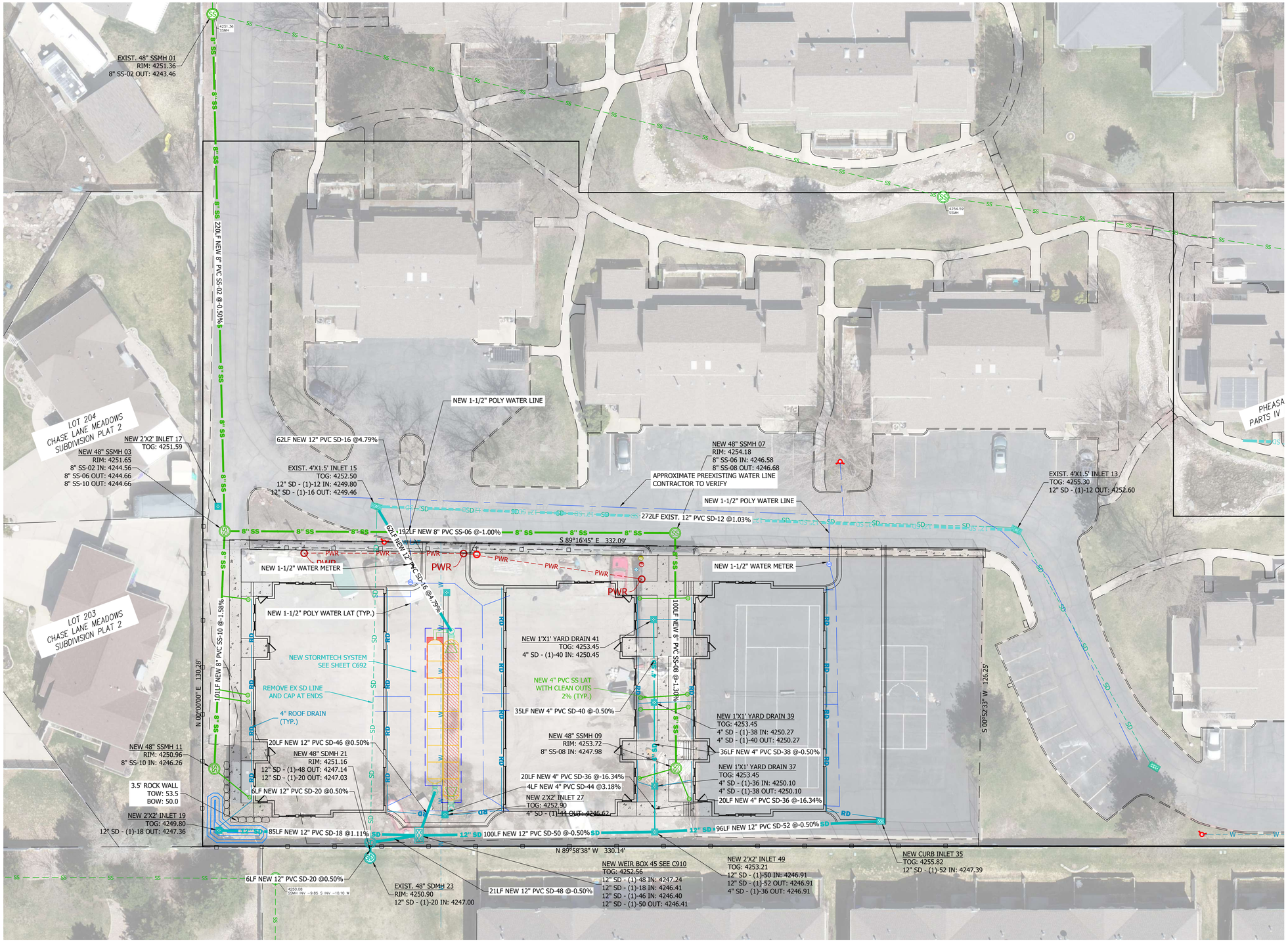

SCALE: 1" = 20'

METER SIZING

4/3 BEDROOM	Fixtures	Units/Fixture	Fixture Units
Bath/Shower	2	1.4	2.8
Lavatory	3	0.7	2.1
Dishwasher / Sink	5	1.4	7
Flush Tank Toilet	3	2.2	6.6
Clothes Washer	1	1.4	1.4
		Total	19.9

3 BEDROOM	Fixtures	Units/Fixture	Fixture Units
Bath/Shower	2	1.4	2.8
Lavatory	3	0.7	2.1
Dishwasher / Sink	6	1.4	8.4
Flush Tank Toilet	3	2.2	6.6
Clothes Washer	1	1.4	1.4
		Total	21.3

	APTS	FU/APT	Fixture Units
4/3 Bedroom Units	6	19.9	119
3 Bedroom Units	6	21.3	128
Total Fixture Units			247
GPM from Hunter's Curve			68
Required Meter Size			1-1/2"

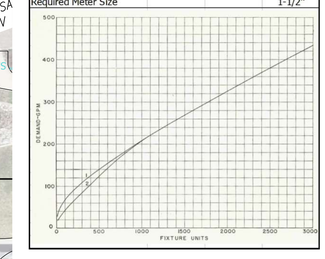

NOTE:
CONTRACTOR TO VERIFY WATER LINE SIZE AND LOCATION FOR THE SITE BEFORE CONSTRUCTION.

Know what's below.
Call 811 before you dig.

BLUE STAKES OF UTAH
UTILITY NOTIFICATION CENTER, INC.
www.bluestakes.org
1-800-662-4111

1470 South 600 West
Woods Cross, UT 84010
Phone 801.298.2236
www.Entellus.com
Entellus

DEVELOPER
ERIC WOOD
Contact: ERIC WOOD

Phone: 801-971-7086
ERICROBERTWOOD@GMAIL.COM

PRELIMINARY NOT FOR CONSTRUCTION

PHEASANTBROOK PH 6 ADDITION

265 PHEASANTBROOK DRIVE
PARCEL # 020340093 PHEASANTBROOK PUD PHASE IV
LOCATED IN SECTION 7, T. 2N., R. 1 E., S.L.B.&M.
CENTERVILLE CITY, DAVIS COUNTY, UTAH

REVISIONS

DRAWN: CSA	2023-05-22
APPROVED: ---	2023-05-22
PROJECT #:	2009002
SET 2009002 23-05-03.dwg	

C600
UTILITY PLAN

\\Entellus-DC-UTAH\2009002\D_PRODUCTION\Civil\04_Plan Set\SET 2009002 23-05-03.dwg 2023-05-22 3:27:41 PM CHRISTOPHER ARGYLE

PHEASANTBROOK PART VI

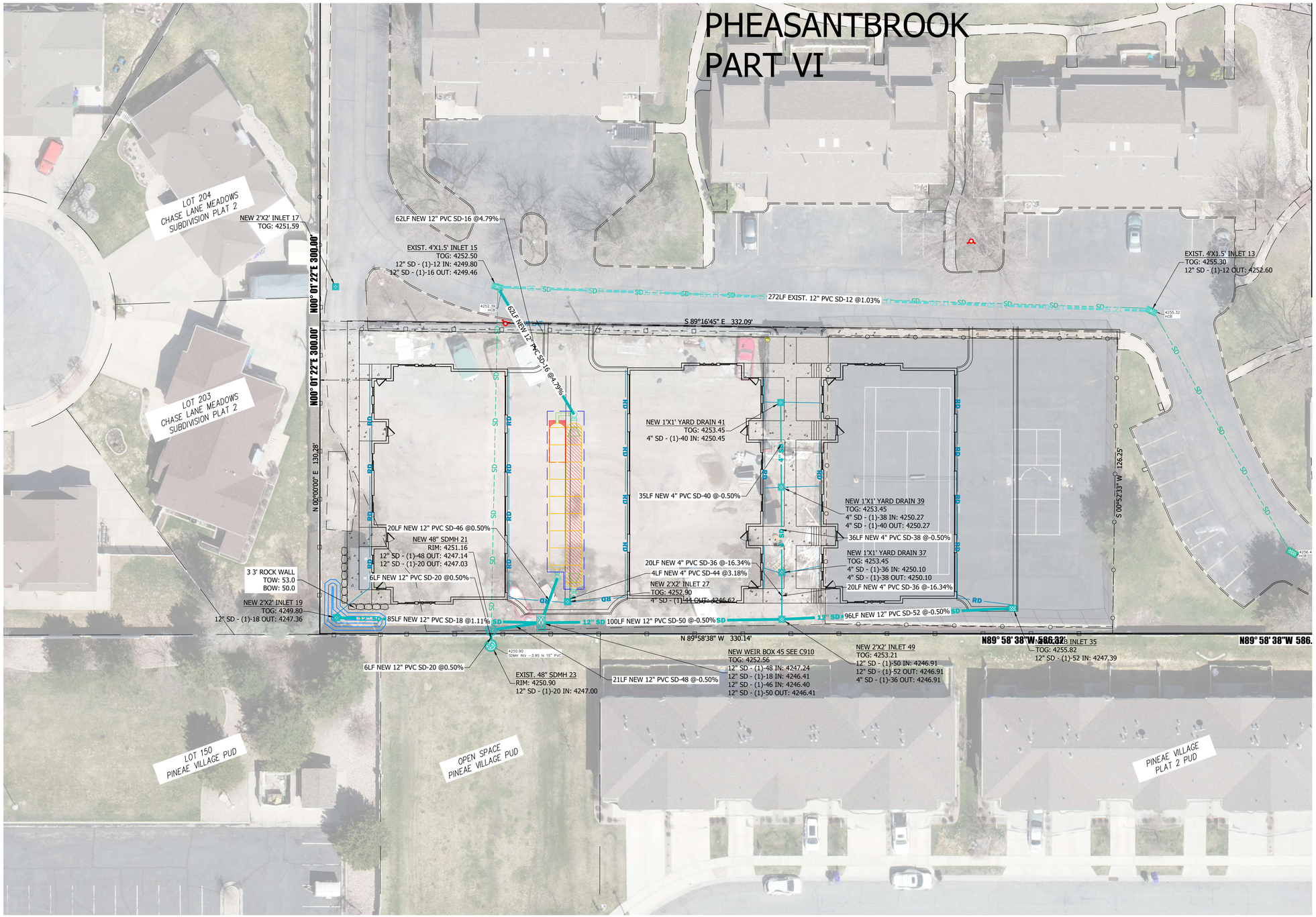

20 0 20 40 60

SCALE: 1" = 20'

DRAINAGE CALCULATIONS

8-May-23

Pre-Development Area Analysis

Area	sq.ft.	Acres	C
Building	1,024	0.02	0.85
Improvements	41,001	0.94	0.90
Landscape	42,170	0.97	0.15
Total	42,170	0.97	1.05

Post-Development Area Analysis

Area	sq.ft.	Acres	C
Building	16,106	0.37	0.85
Improvements	12,075	0.28	0.90
Landscape	13,989	0.32	0.15
Total	42,170	0.97	0.63

100 Year Storage Analysis

NOAA Precipitation Frequency Data Serv

Latitude: 40.9263° **Longitude: -111.8836°**

Allowable Runoff 0.20 cfs/acre

Time (min.)	I in./hr	Runoff ft^3	Allowable Runoff ft^3	Storage ft^3
5	7.000	1,285	58	1,227
10	5.320	1,953	116	1,837
15	4.400	2,423	174	2,249
30	2.960	3,260	349	2,912
60	1.830	4,031	697	3,334
120	1.060	4,670	1,394	3,276
180	0.731	4,831	2,091	2,740
360	0.396	5,234	4,182	1,052
720	0.238	6,292	8,364	0
1440	0.138	7,296	16,729	0

Required Detention **3,334**

80th Percentile Retention Analysis

P_{Rnew} EQ. A	*Rnew = 0.225(Imp)-.05 when Imp<55%*
P_{Rnew} EQ. B	*Rnew = 1.14(Imp)-.371 when Imp>55%*
WQRV EQ.	*WQRV = ($P_{80\%}$ *R_{new} *A)/12*
Retention	*Retention = WQRV*43560*
$P_{80\%}$	0.50 (in.)
Imp_{pre}	1.00
Imp_{Pnew}	67%
A	0.97 (acre)
R_{pre}	0.77
R_{Pnew}	0.39
WQRV	-0.015 ac-ft
Retention	-658 cu.ft.

Combined Storage

Retention	**-658** cu.ft.
Detention	**3992** cu.ft.
Combined Storage	3,334 cu.ft.

Orifice Sizing

Highwater Elevation	0.00 ft
Orifice Elevation	0.00 ft
Flow	0.19 cfs
C_d	0.62 square
Orifice Size	**#DIV/0!** in.

REQUIRED: 3334 CU FT
STORMTECH BASIN 1: 3550 CU FT

TOTAL: 3550 CU FT

Know what's **below.**
Call 811 before you dig.
BLUE STAKES OF UTAH
UTILITY NOTIFICATION CENTER, INC.
www.bluestakes.org
1-800-662-4111

1470 South 600 West
Woods Cross, UT 84010
Phone 801.298.2236
www.Entellus.com
Entellus

DEVELOPER

ERIC WOOD
Contact: ERIC WOOD

Phone: 801-971-7086
ERICROBERTWOOD@GMAIL.COM

PRELIMINARY NOT FOR CONSTRUCTION

PHEASANTBROOK PH 6 ADDITION

265 PHEASANTBROOK DRIVE
PARCEL # 02034:0093 PHEASANTBROOK PUD PHASE IV
LOCATED IN SECTION 7, T.2N., R.1E., S.L.B.&M.
CENTERVILLE CITY, DAVIS COUNTY, UTAH

REVISIONS

DRAWN: CSA	2023-05-22
APPROVED: ---	2023-05-22
PROJECT #:	2009002
SET 2009002 23-05-03.dwg	

C640
STORM SEWER PLAN

\\Entellus-DC-UTAH\2009002\D_PRODUCTION\Civil\04_Plan Set\SET 2009002 23-05-03.dwg 2023-05-22 3:27:50 PM CHRISTOPHER ARGYLE

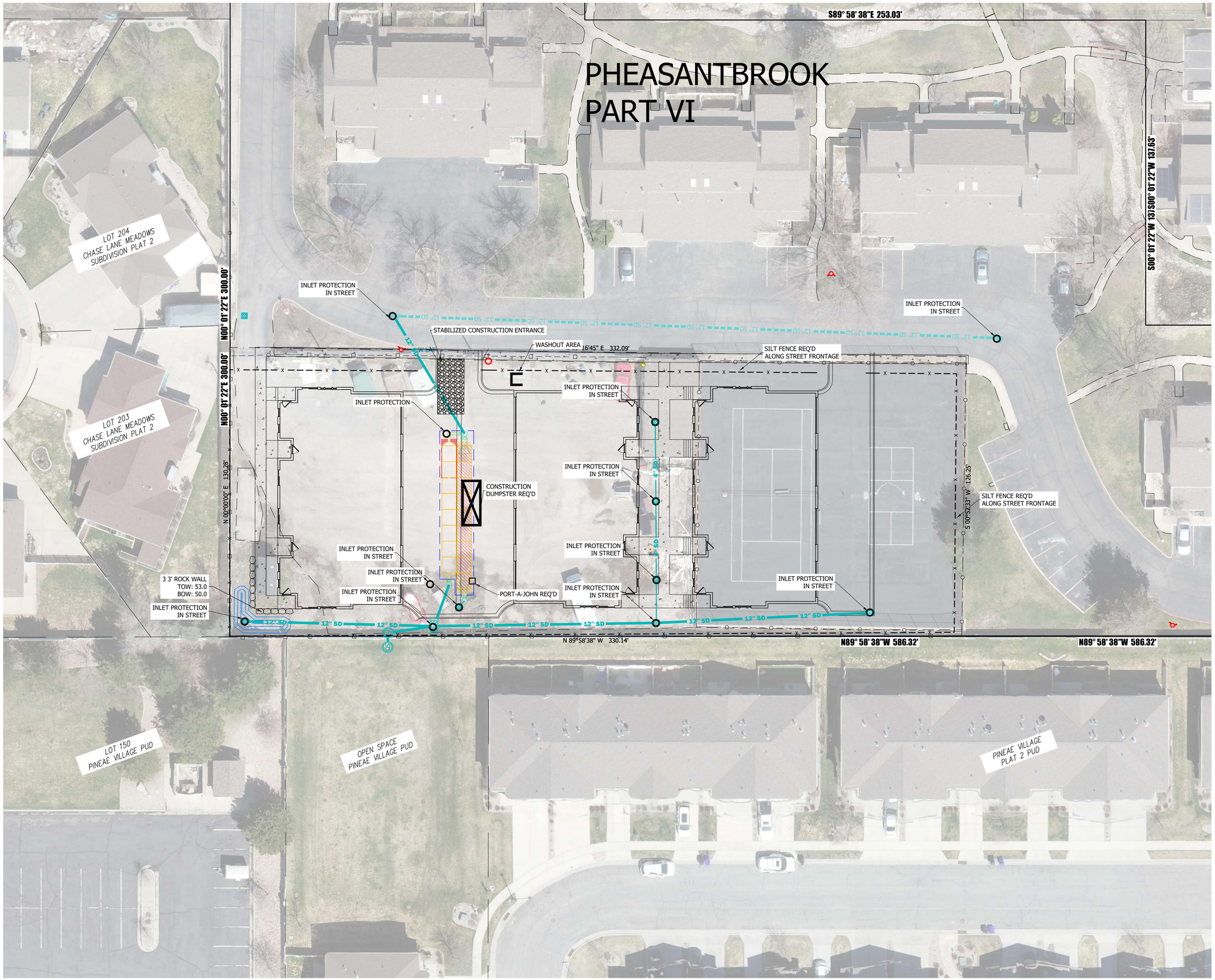

SCALE: 1" = 20'

CONSTRUCTION NOTES

1. CONTRACTOR IS RESPONSIBLE FOR OBTAINING ALL NECESSARY LOCAL, STATE, AND FEDERAL PERMITS PRIOR TO COMMENCING CONSTRUCTION.
2. CONTRACTOR TO MAINTAIN A COPY OF THE SWPPP ON SITE.
3. CONTRACTOR TO INSPECT SITE TO ENSURE THE SWPPP IMPROVEMENTS ARE IN PLACE AND FUNCTIONAL.
4. CONTRACTOR TO MAINTAIN TEMPORARY EROSION AND SEDIMENT CONTROLS AND HOUSEKEEPING MEASURES.
5. ALL SOLID WASTE SHALL BE STORED IN A SECURELY LIDDED METAL DUMPSTER. THE DUMPSTER SHALL MEET ALL STATE AND LOCAL WASTE MANAGEMENT REGULATIONS.
6. ALL HAZARDOUS WASTE SHALL BE DISPOSED OF IN THE MANNER AS SPECIFIED BY THE MANUFACTURER AND STATE AND LOCAL REGULATIONS.
7. A WASHOUT AREA SHALL BE CONSTRUCTED FOR THE TEMPORARY COLLECTION OF EXCESS CONCRETE AND NON-STORM WATER DISCHARGES FROM VEHICLE WASHING. THE CONCRETE WILL BE TAKEN TO THE CITY LANDFILL WITHIN 1 WEEK OF PLACING IN THE WASHOUT AREA.
8. A STABILIZED CONSTRUCTION ENTRANCE WILL BE CONSTRUCTED TO REDUCE VEHICLE TRACKING OF SEDIMENTS ONTO PUBLIC RIGHT OF WAYS. THE PAVED STREET ADJACENT TO THE SITE ENTRANCE WILL BE SWEPT DAILY TO REMOVE EXCESS DIRT.
9. INSPECTION SHALL BE MADE MONTHLY AND WITHIN 24 HOURS AFTER A RAINFALL EVENT OF 0.5 INCHES OR GREATER. ALL NON-STORM WATER FLOWS SHALL BE DIRECTED TOWARD THE WASHOUT AREA OR SEDIMENT BASIN. THE SWPPP WILL BE REVISED AS SITE CONDITIONS AND PROJECT WARRANTS.
10. CONTRACTOR SHALL BE RESPONSIBLE FOR CLEANING AND SWEEPING PUBLIC STREETS ON A DAILY BASIS, OR MORE IF NECESSARY.
11. CONTRACTOR SHALL BE RESPONSIBLE TO PROVIDE ADEQUATE DUST CONTROL THROUGHOUT THE COURSE OF THE PROJECT.

1470 South 600 West
Woods Cross, UT 84010
Phone 801.298.2236
www.Entellus.com
Entellus

DEVELOPER

ERIC WOOD
Contact: ERIC WOOD

Phone: 801-971-7086
ERICROBERTWOOD@GMAIL.COM

PRELIMINARY NOT FOR CONSTRUCTION

PHEASANTBROOK PH 6 ADDITION

265 PHEASANTBROOK DRIVE
PARCEL # 020340093 PHEASANTBROOK PUD PHASE IV
LOCATED IN SECTION 7, T. 2N., R. 1E., SL.B.&M.
CENTERVILLE CITY, DAVIS COUNTY, UTAH

REVISIONS

DRAWN: CSA	2023-05-22
APPROVED: ---	2023-05-22
PROJECT #:	2009002
SET 2009002 23-05-03.dwg	

C690

EROSION CONTROL PLAN

\\Entellus-DC-UTAH\2009002\D_PRODUCTION\Civil\04_Plan Set\SET 2009002 23-05-03.dwg 2023-05-22 3:28:01 PM CHRISTOPHER ARGYLE

BMP: Concrete Waste Management — CWM

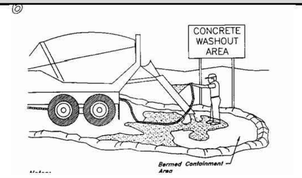

DESCRIPTION:

Prevent or reduce the discharge of pollutants to storm water from concrete waste by conducting washout off-site, performing on-site washout ina designated area, and training employees and subcontractors.

APPLICATION:

This technique is applicable to all types of sites

INSTALLATION / APPLICATION CRITERIA:

- Store dry materials under cover, away from drainage areas
- Minimize excess mixing of fresh concrete, mortar or cement on site
- Do not wash out concrete trucks into storm drains, open ditches, streets, or streams
- Do not allow excess concrete to be dumped on-site, except in designated areas
- When washing concrete to remove fine particles and expose the aggregate, avoid creating runoff by draining the water within a bermed or level area (6" tall X 6' wide)
- Train employees and subcontractors in proper concrete waste management

LIMITATIONS:

- Off-site washout or concrete wastes may not always be possible

MAINTENANCE:

- Inspect subcontractors to ensure that concrete wastes are being properly managed
- If using a temporary pit, dispose of hardened concrete on a regular basis

OBJECTIVES

- ☐ Housekeeping Practices
- ☒ Contain Waste
- ☐ Minimize Disturbed Areas
- ☐ Stabilize Disturbed Areas
- ☐ Protect Slopes/Channels
- ☐ Control Site Perimeter
- ☐ Control Internal Erosion

TARGETED POLLUTANTS

H	M	L	
☐	☐	☒	Sediment
☐	☐	☒	Nutrients
☐	☐	☒	Heavy Metals
☐	☐	☒	Toxic Materials
☐	☐	☒	Oil & Grease
☐	☐	☒	Floatable Materials
☒	☐	☐	Bacteria & Viruses
☒	☐	☐	Other Waste

IMPLEMENTATION REQUIREMENTS

H	M	L	
☐	☐	☒	Capital Costs
☐	☐	☒	O&M Costs
☐	☒	☐	Maintenance
☒	☐	☐	Training
☐	☐	☒	Staffing
☐	☐	☒	Administrative

H = High M = Medium L = Low

DAVIS COUNTY STORM WATER COALITION

1500 East 650 North
Fruit Heights, UT 84037

Materials Adapted From Salt Lake County Engineering Division Guidance Document and Other Sources 2006

BMP: Inlet Protection- Silt Bags — IP-SB

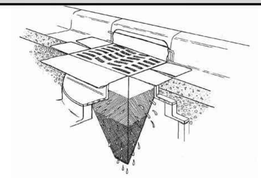

DESCRIPTION:

Collect and trap sediment and debris entering catch basins from either grated or curb inlets. Insert is made of fabric and is placed in the drain inlet around the perimeter of the grate. Runoff passes through the bag before discharging into the drain outlet pipe. Overflow holes are usually provided to pass larger flows without causing a backwater at the grate. Certain manufactured products include polymers intended to increase pollutant removal effectiveness.

APPLICATIONS:

- Storm drain inlet boxes

INSTALLATION / APPLICATION CRITERIA:

- Regular Maintenance is necessary
- Evaluation of the device chosen should be balanced with cost
- Hydraulic capacity controls effectiveness
- Most useful in small drainage areas (< 1 Acre)
- Ideal in combination with other BMP's

LIMITATIONS:

- Cost
- Maintenance required to prevent plugging and remain effective

MAINTENANCE:

Inspection after all storm events and as required between events

OBJECTIVES

- ☐ Housekeeping Practices
- ☒ Contain Waste
- ☐ Minimize Disturbed Areas
- ☐ Stabilize Disturbed Areas
- ☐ Protect Slopes/Channels
- ☐ Control Site Perimeter
- ☐ Control Internal Erosion

TARGETED POLLUTANTS

H	M	L	
☒	☐	☐	Sediment
☐	☐	☒	Nutrients
☐	☐	☒	Heavy Metals
☐	☐	☒	Toxic Materials
☐	☐	☒	Oil & Grease
☒	☐	☐	Floatable Materials
☐	☐	☒	Bacteria & Viruses
☐	☐	☒	Other Waste

IMPLEMENTATION REQUIREMENTS

H	M	L	
☐	☒	☐	Capital Costs
☐	☒	☐	O&M Costs
☒	☐	☐	Maintenance
☐	☐	☒	Training
☐	☐	☒	Staffing
☒	☒	☒	Administrative

H = High M = Medium L = Low

DAVIS COUNTY STORM WATER COALITION

1500 East 650 North
Fruit Heights, UT 84037

Materials Adapted From Salt Lake County Engineering Division Guidance Document and Other Sources 2006

BMP: Inlet Protection - Silt Fence or Straw Bale — IP-SF

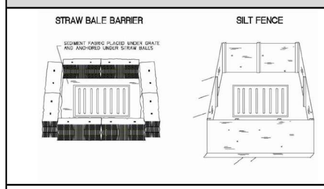

DESCRIPTION:

Sediment barrier erected around storm drain inlet.

APPLICATION:

- Construct at storm drainage inlets located downgradient of areas to be disturbed by construction (for inlets in paved areas see other information sheets for inlet protection)

INSTALLATION / APPLICATION CRITERIA:

- Provide upgradient sediment controls, such as silt fence during construction of inlet
- When construction of linet is complete, erect straw bale barrier or silt fence surrounding perimeter of inlet. Follow instructions and guidelines on individual BMP information sheets for straw bale barrier and silt fence construction

LIMITATIONS:

- Recommended maximum contributing drainage area of one acre
- Limited to inlets located in open unpaved areas
- Requires shallow slopes adjacent to inlet

MAINTENANCE:

- Inspect inlet protection following storm event and at a minimum of once every two weeks
- Remove accumulated sediment when it reaches 4" in depth
- Repair or realign barrier/fence as needed
- Look for bypassing or undercutting and recompact soil around barrier/fence as required

OBJECTIVES

- ☐ Housekeeping Practices
- ☐ Contain Waste
- ☐ Minimize Disturbed Areas
- ☐ Stabilize Disturbed Areas
- ☐ Protect Slopes/Channels
- ☒ Control Site Perimeter
- ☒ Control Internal Erosion

TARGETED POLLUTANTS

H	M	L	
☒	☐	☐	Sediment
☐	☐	☒	Nutrients
☐	☐	☒	Heavy Metals
☐	☐	☒	Toxic Materials
☐	☐	☒	Oil & Grease
☒	☐	☐	Floatable Materials
☐	☐	☒	Bacteria & Viruses
☐	☐	☒	Other Waste

IMPLEMENTATION REQUIREMENTS

H	M	L	
☐	☒	☐	Capital Costs
☐	☒	☐	O&M Costs
☐	☐	☒	Maintenance
☐	☐	☒	Training
☐	☐	☒	Staffing
☐	☐	☒	Administrative

H = High M = Medium L = Low

DAVIS COUNTY STORM WATER COALITION

1500 East 650 North
Fruit Heights, UT 84037

Materials Adapted From Salt Lake County Engineering Division Guidance Document and Other Sources 2006

BMP: Portable Toilet — PT

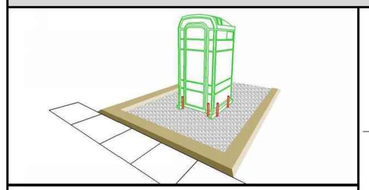

DESCRIPTION:

Temporary on-site sanitary facilities for construction personnel.

APPLICATION:

All sites with no permanent sanitary facilities or where permanent facility is too far from activities.

INSTALLATION / APPLICATION CRITERIA:

- Locate portable toilets in a convenient locations throughout the site
- Prepare level, gravel surface and provide clear access to the toilets for servicing and for on-site personnel
- Construct earth berm perimiter (see Earth Berm Barrier Sheet), control for spill / leak protection.
- Anchor the portable toilet to prevent tipping

LIMITATIONS:

No limitations

MAINTENANCE:

- Portable toilets should be maintained in good working order by licensed service with daily observation for leak detection
- Regular waste collection should be arranged with licensed service
- All waste should be deposited in sanitary sewer system for treatment with appropriate agency approval

OBJECTIVES

- ☒ Housekeeping Practices
- ☒ Contain Waste
- ☐ Minimize Disturbed Areas
- ☐ Stabilize Disturbed Areas
- ☐ Protect Slopes/Channels
- ☐ Control Site Perimeter
- ☐ Control Internal Erosion

TARGETED POLLUTANTS

H	M	L	
☐	☐	☒	Sediment
☐	☐	☒	Nutrients
☐	☐	☒	Heavy Metals
☐	☒	☐	Toxic Materials
☐	☐	☒	Oil & Grease
☐	☐	☒	Floatable Materials
☒	☐	☐	Bacteria & Viruses
☒	☐	☐	Other Waste

IMPLEMENTATION REQUIREMENTS

H	M	L	
☐	☐	☒	Capital Costs
☐	☐	☒	O&M Costs
☐	☐	☒	Maintenance
☐	☐	☒	Training
☐	☐	☒	Staffing
☐	☐	☒	Administrative

H = High M = Medium L = Low

DAVIS COUNTY STORM WATER COALITION

1500 East 650 North
Fruit Heights, UT 84037

Materials Adapted From Salt Lake County Engineering Division Guidance Document and Other Sources 2006

BMP: Stabilized Construction Entrance — SCE

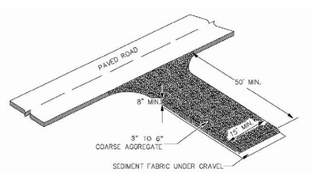

DESCRIPTION:

A stabilized pad of crushed stone located where construction traffic enters or leaved the site from or to paved surface.

APPLICATION:

At any point of ingress and egress at a construction site where adjacent traveled way is paved. Generally applies to sites over 2 acres unless special conditions exist.

INSTALLATION / APPLICATION CRITERIA:

- Clear and grub area and grade to provide maximum slope of 2%
- Compact subgrade and place filter fabric if desired (recommended for entrances to remain for more than 3 months
- Place coarse aggregate, 3-6 inches in size, to a minimum depth of 8 inches

LIMITATIONS:

- Requires periodic top dressing with additional stones
- Should be used in conjuction with street sweeping on adjacent public right-of-way

MAINTENANCE:

- Inspect daily for loss of gravel or sediment buildup
- Inspect adjacent roadway for sediment deposit and clean by sweeping or shoveling
- Repair entrance and replace gravel as required to maintain control in good working condition
- Expand stabilized area as required to accommodate traffic and prevent erosion at driveways

OBJECTIVES

- ☒ Housekeeping Practices
- ☐ Contain Waste
- ☐ Minimize Disturbed Areas
- ☐ Stabilize Disturbed Areas
- ☐ Protect Slopes/Channels
- ☒ Control Site Perimeter
- ☐ Control Internal Erosion

TARGETED POLLUTANTS

H	M	L	
☒	☐	☐	Sediment
☐	☐	☒	Nutrients
☐	☐	☒	Heavy Metals
☐	☐	☒	Toxic Materials
☐	☐	☒	Oil & Grease
☐	☐	☒	Floatable Materials
☐	☐	☒	Bacteria & Viruses
☐	☐	☒	Other Waste

IMPLEMENTATION REQUIREMENTS

H	M	L	
☒	☐	☐	Capital Costs
☐	☒	☐	O&M Costs
☐	☒	☐	Maintenance
☐	☐	☒	Training
☐	☐	☒	Staffing
☐	☐	☒	Administrative

H = High M = Medium L = Low

DAVIS COUNTY STORM WATER COALITION

1500 East 650 North
Fruit Heights, UT 84037

Materials Adapted From Salt Lake County Engineering Division Guidance Document and Other Sources 2006

BMP: Silt Fence — SF

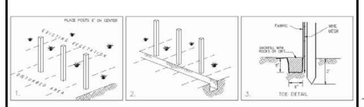

DESCRIPTION:

A temporary sediment barrier consisting of entrenched filter fabric stretched across and secured to supporting posts.

APPLICATION:

- Perimeter control: place barrier at downgradient limits of disturbance
- Sediment barrier: place barrier at toe of slope or soil stockpile
- Protection of existing waterways: place barrier at top of stream bank
- Inlet protection: place fence surrounding catch basins

INSTALLATION / APPLICATION CRITERIA:

- Place posts 6' apart on center along contour (or use preassembled unit) and drive 2' minimum into ground. Excavate an anchor trench immediately up gradient of posts
- Cut fabric to require width, unroll along length of barrier and drape over barrier. Secure fabric to mesh with twine, staples, or similar, with trailing edge extending into anchor trench
- Backfill trench over fabric to anchor
- Fabric must have 85% minimum sediment removal efficiency

LIMITATIONS:

- Recommended maximum drainage area of 0.5 acre per 100 feet
- Recommended maximum upgradient slope length of 150'
- Recommended maximum uphill grade of 2:1 (50%)
- Recommended maximum flow rate of 0.5 cfs
- Ponding should not be allowed behind fence

MAINTENANCE:

- Inspect immediatly after any rainfall and at least daily during prolonged rainfall
- Look for runoff bypassing ends of barriers or undercutting barriers
- Repair or replace damaged areas of the barrier and remove accumulated sediment
- Reanchor fence as necessary to prevent shortcutting
- Remove accumulated sediment when it reaches 1/2 the height of the fence

OBJECTIVES

- ☐ Housekeeping Practices
- ☐ Contain Waste
- ☐ Minimize Disturbed Areas
- ☐ Stabilize Disturbed Areas
- ☒ Protect Slopes/Channels
- ☒ Control Site Perimeter
- ☒ Control Internal Erosion

TARGETED POLLUTANTS

H	M	L	
☒	☐	☐	Sediment
☐	☐	☒	Nutrients
☐	☐	☒	Heavy Metals
☐	☐	☒	Toxic Materials
☐	☐	☒	Oil & Grease
☐	☐	☒	Floatable Materials
☐	☐	☒	Bacteria & Viruses
☐	☐	☒	Other Waste

IMPLEMENTATION REQUIREMENTS

H	M	L	
☐	☒	☐	Capital Costs
☐	☒	☐	O&M Costs
☐	☒	☐	Maintenance
☐	☐	☒	Training
☐	☐	☒	Staffing
☐	☐	☒	Administrative

H = High M = Medium L = Low

DAVIS COUNTY STORM WATER COALITION

1500 East 650 North
Fruit Heights, UT 84037

Materials Adapted From Salt Lake County Engineering Division Guidance Document and Other Sources 2006

BMP: Waste Disposal — WD

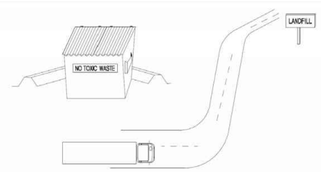

DESCRIPTION:

Controlled storage and disposal of solid waste generated by construction activities.

APPLICATION:

All construction sites

INSTALLATION / APPLICATION CRITERIA:

- Designate one or several waste collection areas with easy access for construction vehicles and personnel. Ensure no waterways or storm drainage inlets are located near the waste collection areas.
- Construct compacted earthen berm (See Earth Berm Barrier Information Sheet), or similar perimeter containment around collection area for impoundment in the case of spills.
- Ensure all on site personnel are aware of and utilize designated waste collection area properly and for intended use only (e.g. all toxic, hazardous, or recyclable materials shall be properly disposed of separately from general construction waste).
- Arrange for periodic pickup, transfer and disposal of collected waste at an authorized disposal location. Include regular Porto-potty service in waste management activities.

LIMITATIONS:

- On-site personnel are responsible for correct disposal of waste

MAINTENANCE:

- Discuss waste management procedures at progress meetings
- Collect site trash daily and deposit in containers at designated collection areas
- Randomly check disposed materials for any unauthorized waste (e.g. toxic materials).

OBJECTIVES

- ☒ Housekeeping Practices
- ☒ Contain Waste
- ☐ Minimize Disturbed Areas
- ☐ Stabilize Disturbed Areas
- ☐ Protect Slopes/Channels
- ☐ Control Site Perimeter
- ☐ Control Internal Erosion

TARGETED POLLUTANTS

H	M	L	
☐	☐	☐	Sediment
☐	☐	☐	Nutrients
☐	☐	☐	Heavy Metals
☒	☐	☐	Toxic Materials
☐	☒	☐	Oil & Grease
☒	☐	☐	Floatable Materials
☐	☐	☐	Bacteria & Viruses
☒	☐	☐	Other Waste

IMPLEMENTATION REQUIREMENTS

H	M	L	
☒	☐	☐	Capital Costs
☒	☐	☐	O&M Costs
☐	☒	☐	Maintenance
☒	☐	☐	Training
☐	☐	☒	Staffing
☐	☐	☒	Administrative

H = High M = Medium L = Low

DAVIS COUNTY STORM WATER COALITION

1500 East 650 North
Fruit Heights, UT 84037

Materials Adapted From Salt Lake County Engineering Division Guidance Document and Other Sources 2006

1470 South 600 West
Woods Cross, UT 84010
Phone 801.298.2236
www.Entellus.com
Entellus

DEVELOPER
ERIC WOOD
Contact: ERIC WOOD

Phone: 801-971-7086
ERICROBERTWOOD@GMAIL.COM

PRELIMINARY NOT FOR CONSTRUCTION

PHEASANTBROOK PH 6 ADDITION

265 PHEASANTBROOK DRIVE
PARCEL # 02034-0093 PHEASANTBROOK PUD PHASE IV
LOCATED IN SECTION 7, T.2N, R.1E., S.L.B.&M.
CENTERVILLE CITY, DAVIS COUNTY, UTAH

REVISIONS

DRAWN: DSA		2023-05-22
APPROVED: LKM		2023-05-22
PROJECT #:	##2009002	
SET 2009002 23-05-03.dwg		

C691

##########

\\Entellus-DC-UTAH\2009002\D_PRODUCTION\Civil\04_Plan Set\SET 2009002 23-05-03.dwg 2023-05-22 3:28:04 PM CHRISTOPHER ARGYLE

PROPOSED LAYOUT	
17	STORMTECH MC-3500 CHAMBERS
4	STORMTECH MC-3500 END CAPS
12	STONE ABOVE (in)
9	STONE BELOW (in)
40	STONE VOID
3551	INSTALLED SYSTEM VOLUME (CF) (PERIMETER STONE INCLUDED) (COVER STONE INCLUDED) (BASE STONE INCLUDED)
1088	SYSTEM AREA (SF)
179.0	SYSTEM PERIMETER (ft)

CONCEPTUAL ELEVATIONS:	
MAXIMUM ALLOWABLE GRADE (TOP OF PAVEMENT/UNPAVED):	12.50
MINIMUM ALLOWABLE GRADE (UNPAVED WITH TRAFFIC):	6.50
MINIMUM ALLOWABLE GRADE (UNPAVED NO TRAFFIC):	6.00
MINIMUM ALLOWABLE GRADE (TOP OF RIGID CONCRETE PAVEMENT):	6.00
MINIMUM ALLOWABLE GRADE (BASE OF FLEXIBLE PAVEMENT):	6.00
TOP OF STONE:	5.50
TOP OF MC-3500 CHAMBER:	4.50
12" x 12" TOP MANIFOLD INVERT:	2.95
24" ISOLATOR ROW PLUS INVERT:	0.92
24" ISOLATOR ROW PLUS INVERT:	0.92
18" BOTTOM CONNECTION INVERT:	0.90
BOTTOM OF MC-3500 CHAMBER:	0.75
BOTTOM OF STONE:	0.00

*INVERT ABOVE BASE OF CHAMBER

PART TYPE	ITEM ON LAYOUT	DESCRIPTION	INVERT*	MAX FLOW
PREFABRICATED END CAP	A	24" BOTTOM CORED END CAP, PART#: MC3500IEPP24BC / TYP OF ALL 24" BOTTOM CONNECTIONS AND ISOLATOR PLUS ROWS	2.06"	
PREFABRICATED END CAP	B	12" TOP CORED END CAP, PART#: MC3500IEPP12T / TYP OF ALL 12" TOP CONNECTIONS	26.36"	
PREFABRICATED END CAP	C	18" BOTTOM CORED END CAP, PART#: MC3500IEPP18BC / TYP OF ALL 18" BOTTOM CONNECTIONS	1.77"	
FLAMP	D	INSTALL FLAMP ON 24" ACCESS PIPE / PART#: MCFLAMP (TYP 2 PLACES)		
MANIFOLD	E	12" x 12" TOP MANIFOLD, ADS N-12	26.36"	
NYLOPLAST (INLET W/ ISO PLUS ROW)	F	30" DIAMETER (24.00" SUMP MIN)		2.5 CFS IN
NYLOPLAST (INLET W/ ISO PLUS ROW)	G	30" DIAMETER (24.00" SUMP MIN)		
NYLOPLAST (OUTLET)	H	30" DIAMETER (DESIGN BY ENGINEER)		4.0 CFS OUT

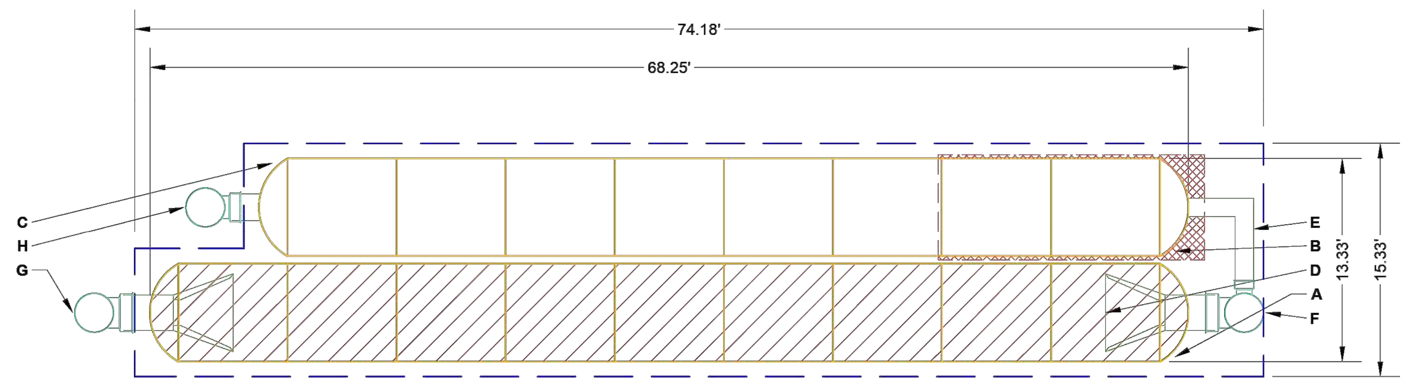

ISOLATOR ROW PLUS SEE DETAIL()

PLACE MINIMUM 17.50' OF ADSPLUS175 WOVEN GEOTEXTILE OVER BEDDING STONE AND UNDERNEATH CHAMBER FEET FOR SCOUR PROTECTION AT ALL CHAMBER INLET ROWS

BED LIMITS

NOTES

- MANIFOLD SIZE TO BE DETERMINED BY SITE DESIGN ENGINEER. SEE TECH NOTE #6.32 FOR MANIFOLD SIZING GUIDANCE.
- DUE TO THE ADAPTATION OF THIS CHAMBER SYSTEM TO SPECIFIC SITE AND DESIGN CONSTRAINTS, IT MAY BE NECESSARY TO CUT AND COUPLE ADDITIONAL PIPE TO STANDARD MANIFOLD COMPONENTS IN THE FIELD.
- THE SITE DESIGN ENGINEER MUST REVIEW ELEVATIONS AND IF NECESSARY ADJUST GRADING TO ENSURE THE CHAMBER COVER REQUIREMENTS ARE MET.
- THIS CHAMBER SYSTEM WAS DESIGNED WITHOUT SITE-SPECIFIC INFORMATION ON SOIL CONDITIONS OR BEARING CAPACITY. THE SITE DESIGN ENGINEER IS RESPONSIBLE FOR DETERMINING THE SUITABILITY OF THE SOIL AND PROVIDING THE BEARING CAPACITY OF THE INSITU SOILS. THE BASE STONE DEPTH MAY BE INCREASED OR DECREASED ONCE THIS INFORMATION IS PROVIDED.
- **NOT FOR CONSTRUCTION:** THIS LAYOUT IS FOR DIMENSIONAL PURPOSES ONLY TO PROVE CONCEPT & THE REQUIRED STORAGE VOLUME CAN BE ACHIEVED ON SITE.

SPACE INTENTIONALLY LEFT BLANK

SPACE INTENTIONALLY LEFT BLANK

MC-3500 TECHNICAL SPECIFICATION

NTS

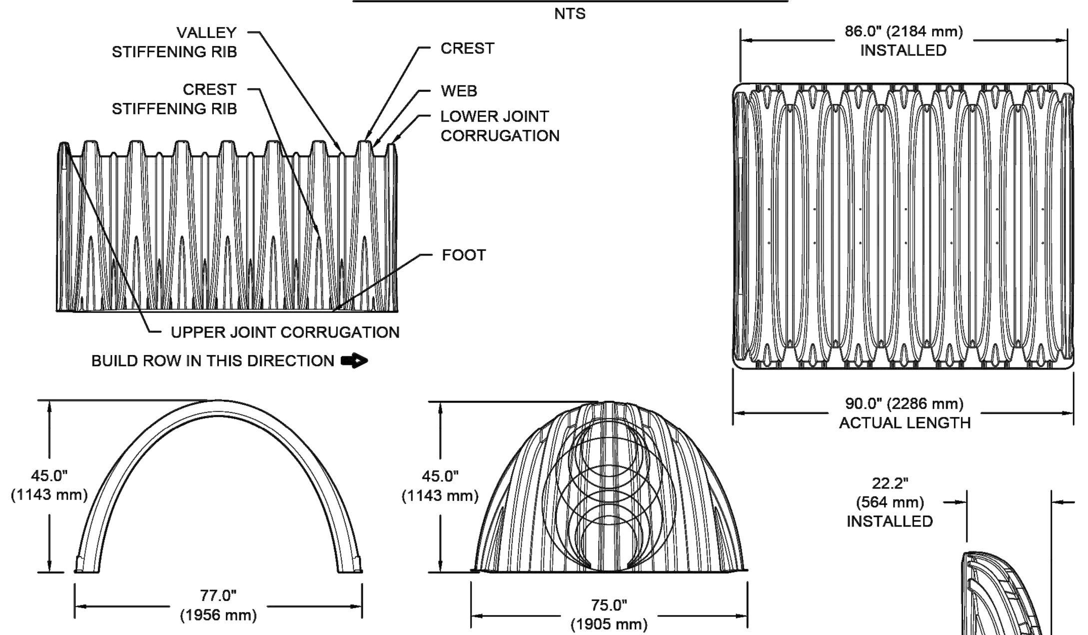

NOMINAL CHAMBER SPECIFICATIONS

SIZE (W X H X INSTALLED LENGTH)	77.0" X 45.0" X 86.0"	(1956 mm X 1143 mm X 2184 mm)
CHAMBER STORAGE	109.9 CUBIC FEET	(3.11 m³)
MINIMUM INSTALLED STORAGE*	175.0 CUBIC FEET	(4.96 m³)
WEIGHT	134 lbs.	(60.8 kg)

NOMINAL END CAP SPECIFICATIONS

SIZE (W X H X INSTALLED LENGTH)	75.0" X 45.0" X 22.2"	(1905 mm X 1143 mm X 564 mm)
END CAP STORAGE	14.9 CUBIC FEET	(0.42 m³)
MINIMUM INSTALLED STORAGE*	45.1 CUBIC FEET	(1.28 m³)
WEIGHT	49 lbs.	(22.2 kg)

*ASSUMES 12" (305 mm) STONE ABOVE, 9" (229 mm) STONE FOUNDATION, 6" SPACING BETWEEN CHAMBERS, 6" (152 mm) STONE PERIMETER IN FRONT OF END CAPS AND 40% STONE POROSITY

STUBS AT BOTTOM OF END CAP FOR PART NUMBERS ENDING WITH "B"
STUBS AT TOP OF END CAP FOR PART NUMBERS ENDING WITH "T"
END CAPS WITH A WELDED CROWN PLATE END WITH "C"
END CAPS WITH A PREFABRICATED WELDED STUB END WITH "W"

PART #	STUB	B	C
MC3500IEPP06T	6" (150 mm)	33.21" (844 mm)	---
MC3500IEPP06B		---	0.66" (17 mm)
MC3500IEPP08T	8" (200 mm)	31.16" (791 mm)	---
MC3500IEPP08B		---	0.81" (21 mm)
MC3500IEPP10T	10" (250 mm)	29.04" (738 mm)	---
MC3500IEPP10B		---	0.93" (24 mm)
MC3500IEPP12T	12" (300 mm)	26.36" (670 mm)	---
MC3500IEPP12B		---	1.35" (34 mm)
MC3500IEPP15T	15" (375 mm)	23.39" (594 mm)	---
MC3500IEPP15B		---	1.50" (38 mm)
MC3500IEPP18TC	18" (450 mm)	20.03" (509 mm)	---
MC3500IEPP18TW			
MC3500IEPP18BC		---	1.77" (45 mm)
MC3500IEPP18BW			
MC3500IEPP24TC	24" (600 mm)	14.48" (368 mm)	---
MC3500IEPP24TW			
MC3500IEPP24BC		---	2.06" (52 mm)
MC3500IEPP24BW			
MC3500IEPP30BC	30" (750 mm)	---	2.75" (70 mm)

NOTE: ALL DIMENSIONS ARE NOMINAL

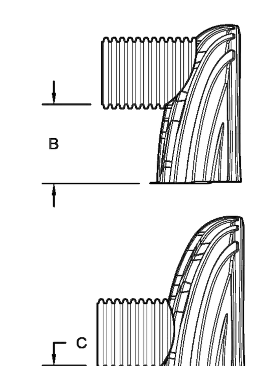

CUSTOM PRECORED INVERTS ARE AVAILABLE UPON REQUEST. INVENTORIED MANIFOLDS INCLUDE 12-24" (300-600 mm) SIZE ON SIZE AND 15-48" (375-1200 mm) ECCENTRIC MANIFOLDS. CUSTOM INVERT LOCATIONS ON THE MC-3500 END CAP CUT IN THE FIELD ARE NOT RECOMMENDED FOR PIPE SIZES GREATER THAN 10" (250 mm). THE INVERT LOCATION IN COLUMN 'B' ARE THE HIGHEST POSSIBLE FOR THE PIPE SIZE.

2 MC-3500 TECHNICAL SPECIFICATION

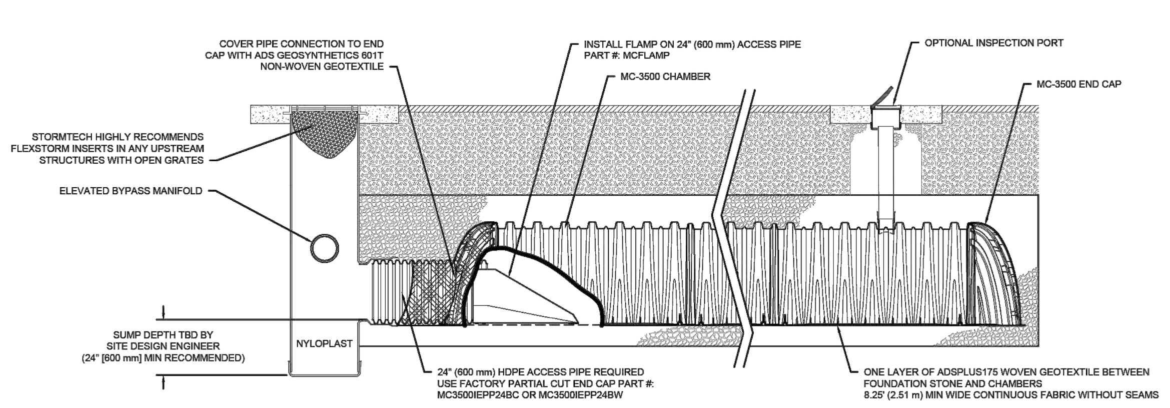

MC-3500 ISOLATOR ROW PLUS DETAIL

NTS

INSPECTION & MAINTENANCE

STEP 1) INSPECT ISOLATOR ROW PLUS FOR SEDIMENT
- A. INSPECTION PORTS (IF PRESENT)
  - A.1. REMOVE/OPEN LID ON NYLOPLAST INLINE DRAIN
  - A.2. REMOVE AND CLEAN FLEXSTORM FILTER IF INSTALLED
  - A.3. USING A FLASHLIGHT AND STADIA ROD, MEASURE DEPTH OF SEDIMENT AND RECORD ON MAINTENANCE LOG
  - A.4. LOWER A CAMERA INTO ISOLATOR ROW PLUS FOR VISUAL INSPECTION OF SEDIMENT LEVELS (OPTIONAL)
  - A.5. IF SEDIMENT IS AT, OR ABOVE, 3" (80 mm) PROCEED TO STEP 2. IF NOT, PROCEED TO STEP 3.
- B. ALL ISOLATOR PLUS ROWS
  - B.1. REMOVE COVER FROM STRUCTURE AT UPSTREAM END OF ISOLATOR ROW PLUS
  - B.2. USING A FLASHLIGHT, INSPECT DOWN THE ISOLATOR ROW PLUS THROUGH OUTLET PIPE
    - i) MIRRORS ON POLES OR CAMERAS MAY BE USED TO AVOID A CONFINED SPACE ENTRY
    - ii) FOLLOW OSHA REGULATIONS FOR CONFINED SPACE ENTRY IF ENTERING MANHOLE
  - B.3. IF SEDIMENT IS AT, OR ABOVE, 3" (80 mm) PROCEED TO STEP 2. IF NOT, PROCEED TO STEP 3.

STEP 2) CLEAN OUT ISOLATOR ROW PLUS USING THE JETVAC PROCESS
- A. A FIXED CULVERT CLEANING NOZZLE WITH REAR FACING SPREAD OF 45" (1.1 m) OR MORE IS PREFERRED
- B. APPLY MULTIPLE PASSES OF JETVAC UNTIL BACKFLUSH WATER IS CLEAN
- C. VACUUM STRUCTURE SUMP AS REQUIRED

STEP 3) REPLACE ALL COVERS, GRATES, FILTERS, AND LIDS; RECORD OBSERVATIONS AND ACTIONS.

STEP 4) INSPECT AND CLEAN BASINS AND MANHOLES UPSTREAM OF THE STORMTECH SYSTEM.

NOTES

1. INSPECT EVERY 6 MONTHS DURING THE FIRST YEAR OF OPERATION. ADJUST THE INSPECTION INTERVAL BASED ON PREVIOUS OBSERVATIONS OF SEDIMENT ACCUMULATION AND HIGH WATER ELEVATIONS.
2. CONDUCT JETTING AND VACTORING ANNUALLY OR WHEN INSPECTION SHOWS THAT MAINTENANCE IS NECESSARY.

3 MC-3500 ISOLATOR ROW PLUS DETAIL

SPACE INTENTIONALLY LEFT BLANK

MC-SERIES END CAP INSERTION DETAIL

NTS

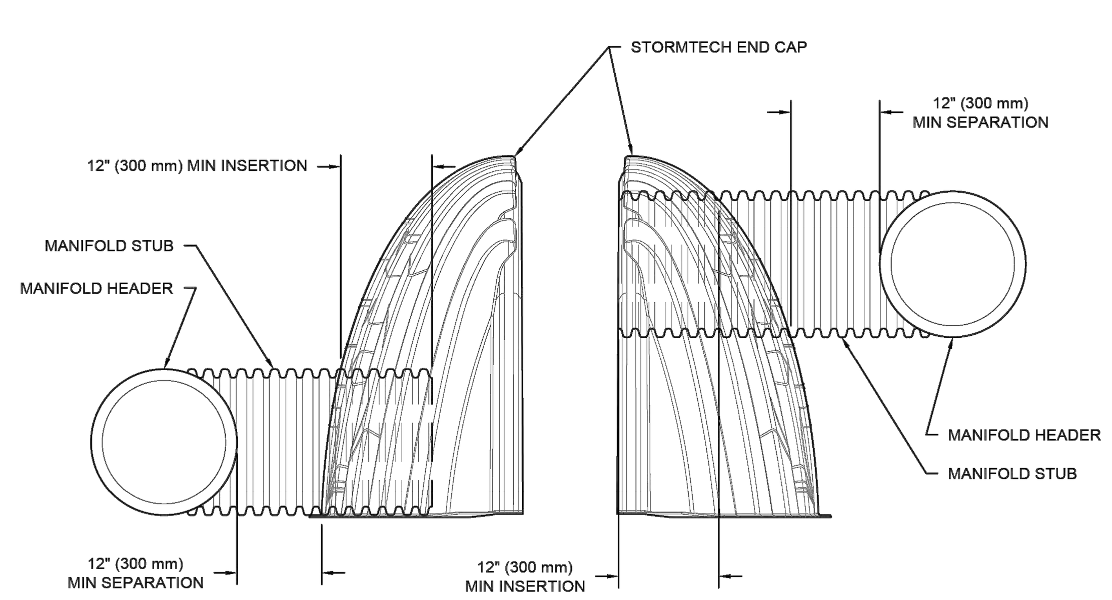

NOTE: MANIFOLD STUB MUST BE LAID HORIZONTAL FOR A PROPER FIT IN END CAP OPENING.

4 MC-SERIES END CAP INSERTION DETAIL

ACCEPTABLE FILL MATERIALS: STORMTECH MC-3500 CHAMBER SYSTEMS

	MATERIAL LOCATION	DESCRIPTION	AASHTO MATERIAL CLASSIFICATIONS	COMPACTION / DENSITY REQUIREMENT
D	**FINAL FILL:** FILL MATERIAL FOR LAYER 'D' STARTS FROM THE TOP OF THE 'C' LAYER TO THE BOTTOM OF FLEXIBLE PAVEMENT OR UNPAVED FINISHED GRADE ABOVE. NOTE THAT PAVEMENT SUBBASE MAY BE PART OF THE 'D' LAYER	ANY SOIL/ROCK MATERIALS, NATIVE SOILS, OR PER ENGINEER'S PLANS. CHECK PLANS FOR PAVEMENT SUBGRADE REQUIREMENTS.	N/A	PREPARE PER SITE DESIGN ENGINEER'S PLANS. PAVED INSTALLATIONS MAY HAVE STRINGENT MATERIAL AND PREPARATION REQUIREMENTS.
C	**INITIAL FILL:** FILL MATERIAL FOR LAYER 'C' STARTS FROM THE TOP OF THE EMBEDMENT STONE ('B' LAYER) TO 24" (600 mm) ABOVE THE TOP OF THE CHAMBER. NOTE THAT PAVEMENT SUBBASE MAY BE A PART OF THE 'C' LAYER.	GRANULAR WELL-GRADED SOIL/AGGREGATE MIXTURES, <35% FINES OR PROCESSED AGGREGATE. MOST PAVEMENT SUBBASE MATERIALS CAN BE USED IN LIEU OF THIS LAYER.	AASHTO M145[1] A-1, A-2-4, A-3 OR AASHTO M43[1] 3, 357, 4, 467, 5, 56, 57, 6, 67, 68, 7, 78, 8, 89, 9, 10	BEGIN COMPACTIONS AFTER 24" (600 mm) OF MATERIAL OVER THE CHAMBERS IS REACHED. COMPACT ADDITIONAL LAYERS IN 12" (300 mm) MAX LIFTS TO A MIN. 95% PROCTOR DENSITY FOR WELL GRADED MATERIAL AND 95% RELATIVE DENSITY FOR PROCESSED AGGREGATE MATERIALS.
B	**EMBEDMENT STONE:** FILL SURROUNDING THE CHAMBERS FROM THE FOUNDATION STONE ('A' LAYER) TO THE 'C' LAYER ABOVE.	CLEAN, CRUSHED, ANGULAR STONE	AASHTO M43[1] 3, 4	NO COMPACTION REQUIRED.
A	**FOUNDATION STONE:** FILL BELOW CHAMBERS FROM THE SUBGRADE UP TO THE FOOT (BOTTOM) OF THE CHAMBER.	CLEAN, CRUSHED, ANGULAR STONE	AASHTO M43[1] 3, 4	PLATE COMPACT OR ROLL TO ACHIEVE A FLAT SURFACE.[2,3]

PLEASE NOTE:
1. THE LISTED AASHTO DESIGNATIONS ARE FOR GRADATIONS ONLY. THE STONE MUST ALSO BE CLEAN, CRUSHED, ANGULAR. FOR EXAMPLE, A SPECIFICATION FOR #4 STONE WOULD STATE: "CLEAN, CRUSHED, ANGULAR NO. 4 (AASHTO M43) STONE".
2. STORMTECH COMPACTION REQUIREMENTS ARE MET FOR 'A' LOCATION MATERIALS WHEN PLACED AND COMPACTED IN 9" (230 mm) (MAX) LIFTS USING TWO FULL COVERAGES WITH A VIBRATORY COMPACTOR.
3. WHERE INFILTRATION SURFACES MAY BE COMPROMISED BY COMPACTION, FOR STANDARD DESIGN LOAD CONDITIONS, A FLAT SURFACE MAY BE ACHIEVED BY RAKING OR DRAGGING WITHOUT COMPACTION EQUIPMENT. FOR SPECIAL LOAD DESIGNS, CONTACT STORMTECH FOR COMPACTION REQUIREMENTS.
4. ONCE LAYER 'C' IS PLACED, ANY SOIL/MATERIAL CAN BE PLACED IN LAYER 'D' UP TO THE FINISHED GRADE. MOST PAVEMENT SUBBASE SOILS CAN BE USED TO REPLACE THE MATERIAL REQUIREMENTS OF LAYER 'C' OR 'D' AT THE SITE DESIGN ENGINEER'S DISCRETION.

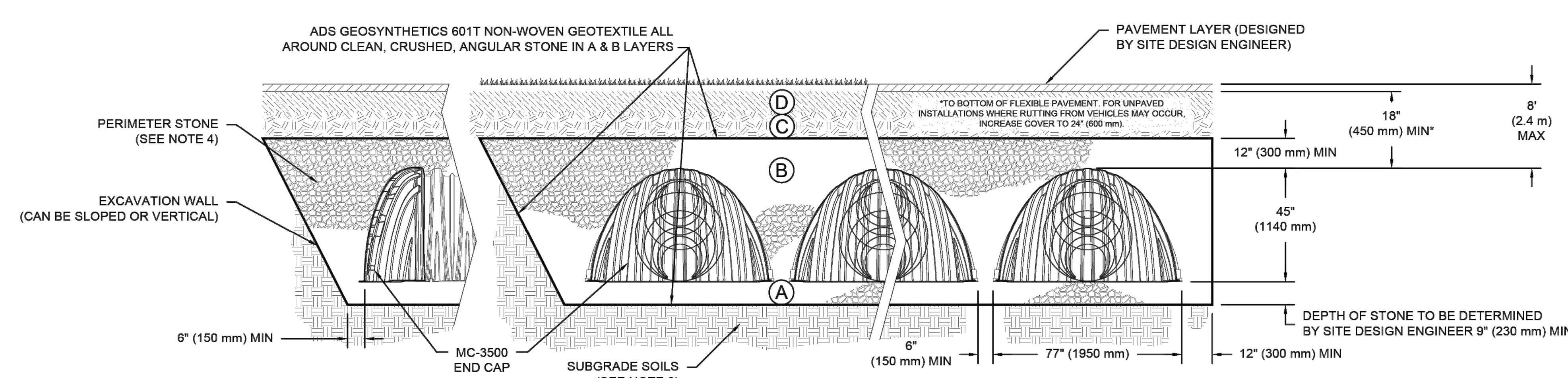

NOTES:

1. CHAMBERS SHALL MEET THE REQUIREMENTS OF ASTM F2418, "STANDARD SPECIFICATION FOR POLYPROPYLENE (PP) CORRUGATED WALL STORMWATER COLLECTION CHAMBERS" CHAMBER CLASSIFICATION 45x76 DESIGNATION SS.
2. MC-3500 CHAMBERS SHALL BE DESIGNED IN ACCORDANCE WITH ASTM F2787 "STANDARD PRACTICE FOR STRUCTURAL DESIGN OF THERMOPLASTIC CORRUGATED WALL STORMWATER COLLECTION CHAMBERS".
3. THE SITE DESIGN ENGINEER IS RESPONSIBLE FOR ASSESSING THE BEARING RESISTANCE (ALLOWABLE BEARING CAPACITY) OF THE SUBGRADE SOILS AND THE DEPTH OF FOUNDATION STONE WITH CONSIDERATION FOR THE RANGE OF EXPECTED SOIL MOISTURE CONDITIONS.
4. PERIMETER STONE MUST BE EXTENDED HORIZONTALLY TO THE EXCAVATION WALL FOR BOTH VERTICAL AND SLOPED EXCAVATION WALLS.
5. REQUIREMENTS FOR HANDLING AND INSTALLATION:
   - TO MAINTAIN THE WIDTH OF CHAMBERS DURING SHIPPING AND HANDLING, CHAMBERS SHALL HAVE INTEGRAL, INTERLOCKING STACKING LUGS.
   - TO ENSURE A SECURE JOINT DURING INSTALLATION AND BACKFILL, THE HEIGHT OF THE CHAMBER JOINT SHALL NOT BE LESS THAN 3".
   - TO ENSURE THE INTEGRITY OF THE ARCH SHAPE DURING INSTALLATION, a) THE ARCH STIFFNESS CONSTANT SHALL BE GREATER THAN OR EQUAL TO 450 LBS/FT/%. THE ASC IS DEFINED IN SECTION 6.2.8 OF ASTM F2418. AND b) TO RESIST CHAMBER DEFORMATION DURING INSTALLATION AT ELEVATED TEMPERATURES (ABOVE 73° F / 23° C), CHAMBERS SHALL BE PRODUCED FROM REFLECTIVE GOLD OR YELLOW COLORS.

1 MC-3500 CROSS SECTION DETAIL

DATE:
PROJECT #:
NOT TO SCALE
DRAWN: CA
CHECKED: N/A
REV:

PHEASANTBROOK PH 6 ADDITION
CENTERVILLE, UT, USA

StormTech® Chamber System
888-892-2694 | WWW.STORMTECH.COM

ADS
4640 TRUEMAN BLVD
HILLIARD, OH 43026
1-800-733-7473

SHEET 1 OF 1

THIS DRAWING HAS BEEN PREPARED BASED ON INFORMATION PROVIDED TO ADS UNDER THE DIRECTION OF THE SITE DESIGN ENGINEER OR OTHER PROJECT REPRESENTATIVE. THE SITE DESIGN ENGINEER SHALL REVIEW THIS DRAWING PRIOR TO CONSTRUCTION. IT IS THE ULTIMATE RESPONSIBILITY OF THE SITE DESIGN ENGINEER TO ENSURE THAT THE PRODUCT(S) DEPICTED AND ALL ASSOCIATED DETAILS MEET ALL APPLICABLE LAWS, REGULATIONS, AND PROJECT REQUIREMENTS.

Entellus
1470 South 600 West
Woods Cross, UT 84010
Phone 801.298.2236
www.Entellus.com

DEVELOPER

ERIC WOOD
Contact: ERIC WOOD

Phone: 801-971-7086
ERICROBERTWOOD@GMAIL.COM

PRELIMINARY NOT FOR CONSTRUCTION

PHEASANTBROOK PH 6 ADDITION

265 PHEASANTBROOK DRIVE
PARCEL # 020340093 PHEASANTBROOK PUD PHASE IV
LOCATED IN SECTION 7, T.2N., R.1E., S.L.B.&M.
CENTERVILLE CITY, DAVIS COUNTY, UTAH

REVISIONS

DRAWN: CSA	2023-05-22
APPROVED: ---	2023-05-22
PROJECT #:	2009002
SET 2009002 23-05-03.dwg	

C692

STORMTECH 1 DETAIL

\\Entellus-DC-UTAH\H2009002\D_PRODUCTION\Civil\04_Plan Set\SET 2009002 23-05-03.dwg 2023-05-22 3:28:10 PM CHRISTOPHER ARGYLE

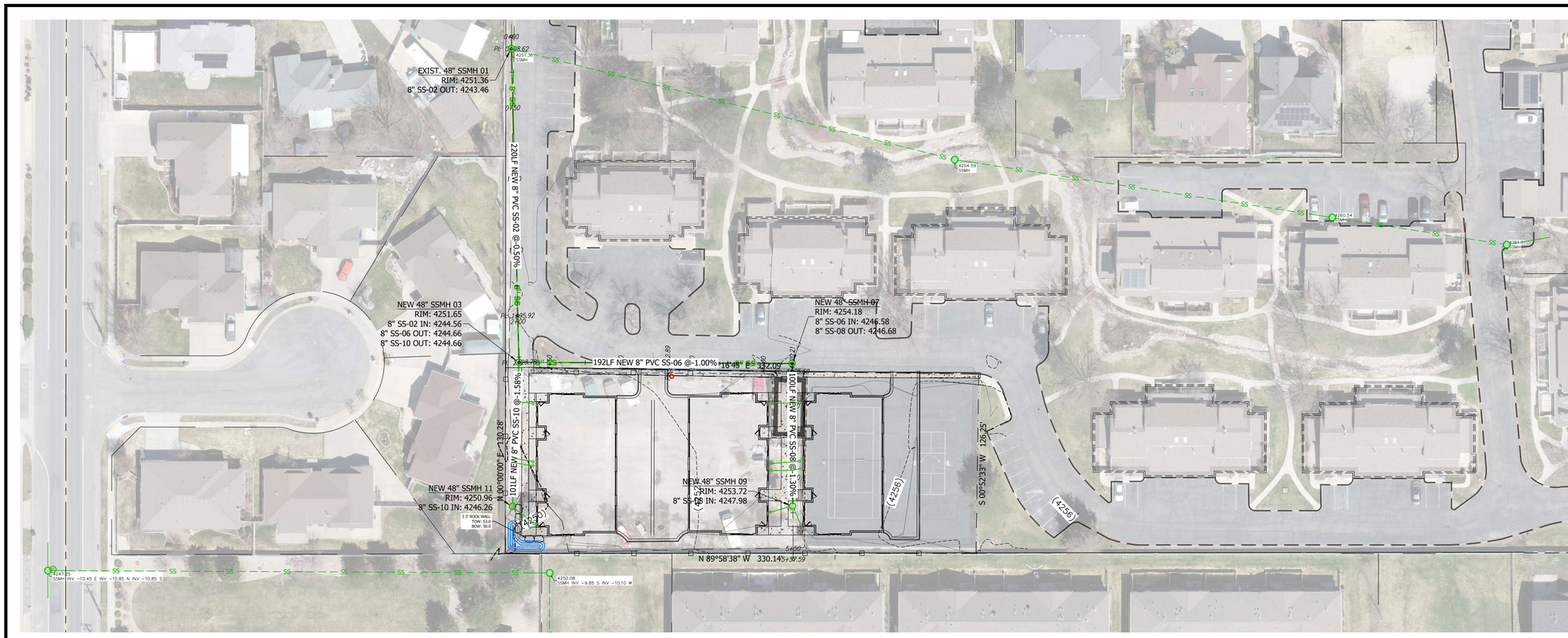

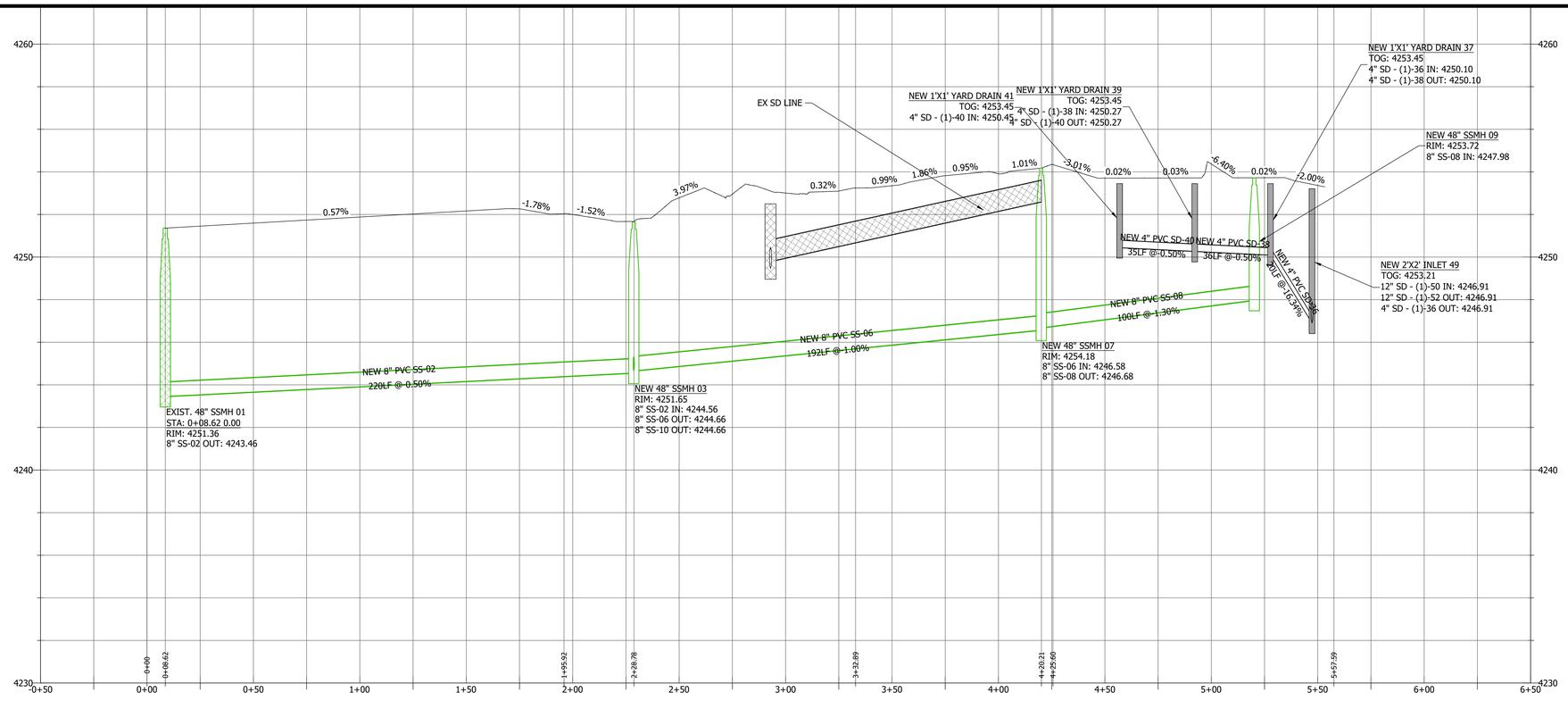

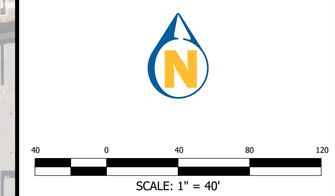

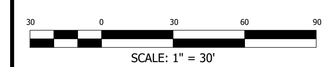

Know what's below.
Call 811 before you dig.
BLUE STAKES OF UTAH
UTILITY NOTIFICATION CENTER, INC.
www.bluestakes.org
1-800-662-4111

1470 South 600 West
Woods Cross, UT 84010
Phone 801.298.2236
www.Entellus.com
Entellus

DEVELOPER

ERIC WOOD
Contact: ERIC WOOD

Phone: 801-971-7086
ERICROBERTWOOD@GMAIL.COM

PRELIMINARY NOT FOR CONSTRUCTION

PHEASANTBROOK PH 6 ADDITION

265 PHEASANTBROOK DRIVE
PARCEL # 02034:0093 PHEASANTBROOK PUD PHASE IV
LOCATED IN SECTION 7, T.2N., R.1E., S.L.B.&M.
CENTERVILLE CITY, DAVIS COUNTY, UTAH

REVISIONS

DRAWN: CSA	2023-05-22
APPROVED: ---	2023-05-22
PROJECT #:	2009002
SET 2009002 23-05-03.dwg	

C700

SANITARY SEWER PROFILE 1

\\Entellus-DC-UTAH\2009002\D_PRODUCTION\Civil\04_Plan Set\SET 2009002 23-05-03.dwg 2023-05-22 3:28:34 PM CHRISTOPHER ARGYLE

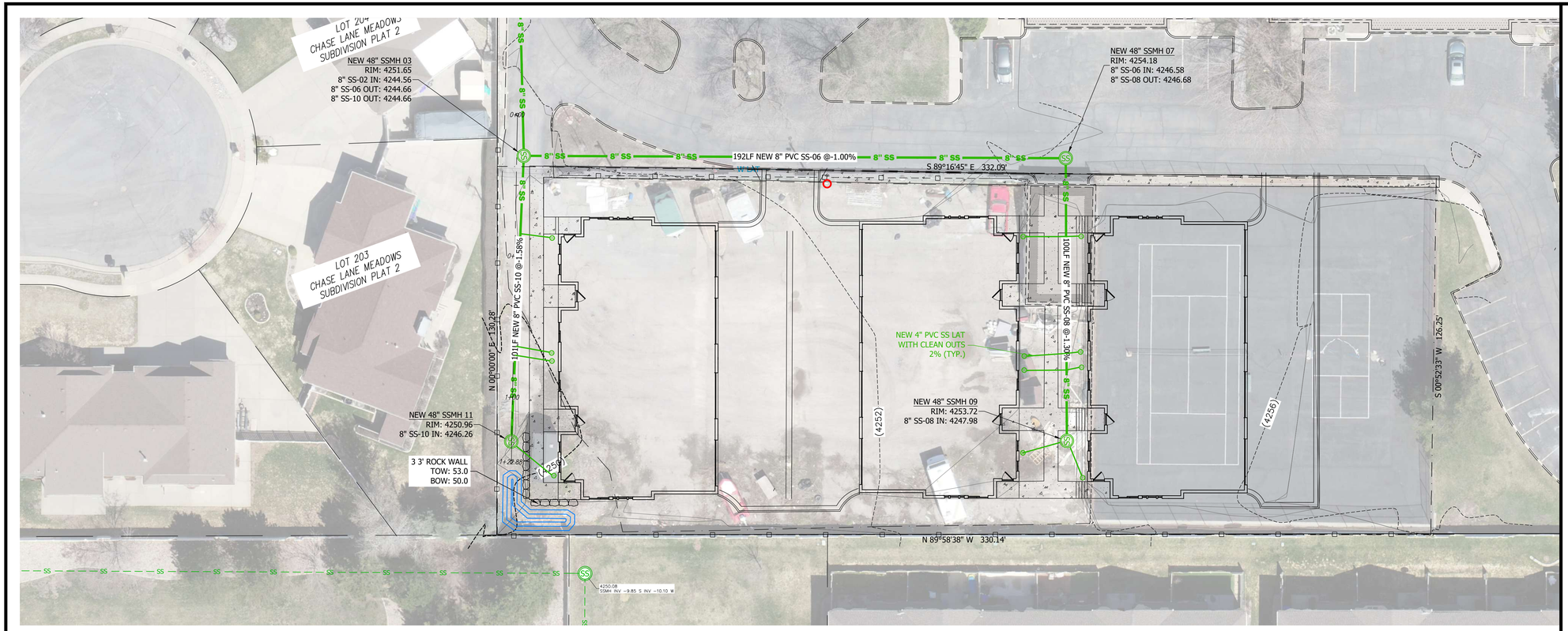

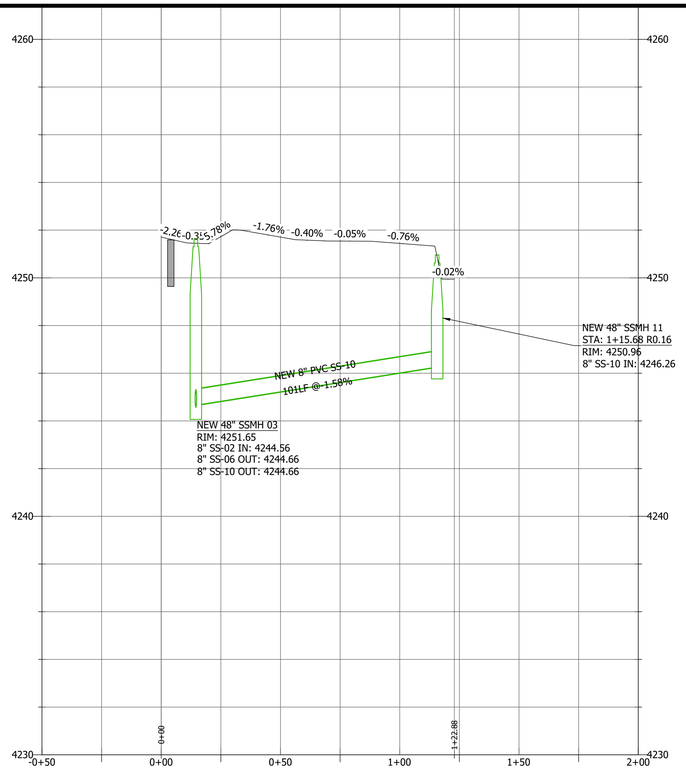

SCALE: 1" = 20'

SCALE: 1" = 30'

Know what's below.
Call 811 before you dig.

BLUE STAKES OF UTAH
UTILITY NOTIFICATION CENTER, INC.
www.bluestakes.org
1-800-662-4111

1470 South 600 West
Woods Cross, UT 84010
Phone 801.298.2236
www.Entellus.com
Entellus

DEVELOPER

ERIC WOOD
Contact: ERIC WOOD

Phone: 801-971-7086
ERICROBERTWOOD@GMAIL.COM

PRELIMINARY
NOT FOR
CONSTRUCTION

PHEASANTBROOK PH 6 ADDITION

265 PHEASANTBROOK DRIVE
PARCEL # 02034093 PHEASANTBROOK PUD PHASE IV
LOCATED IN SECTION 7, T.2N., R.1E., S.L.B.&M.
CENTERVILLE CITY, DAVIS COUNTY, UTAH

REVISIONS

DRAWN: CSA	2023-05-22
APPROVED: ---	2023-05-22
PROJECT #:	2009002
SET 2009002 23-05-03.dwg	

C710
SANITARY SEWER PROFILE 2

\\Entellus-DC-UTAH\2009002\D_PRODUCTION\Civil\04_Plan Set\SET 2009002 23-05-03.dwg 2023-05-22 3:28:44 PM CHRISTOPHER ARGYLE

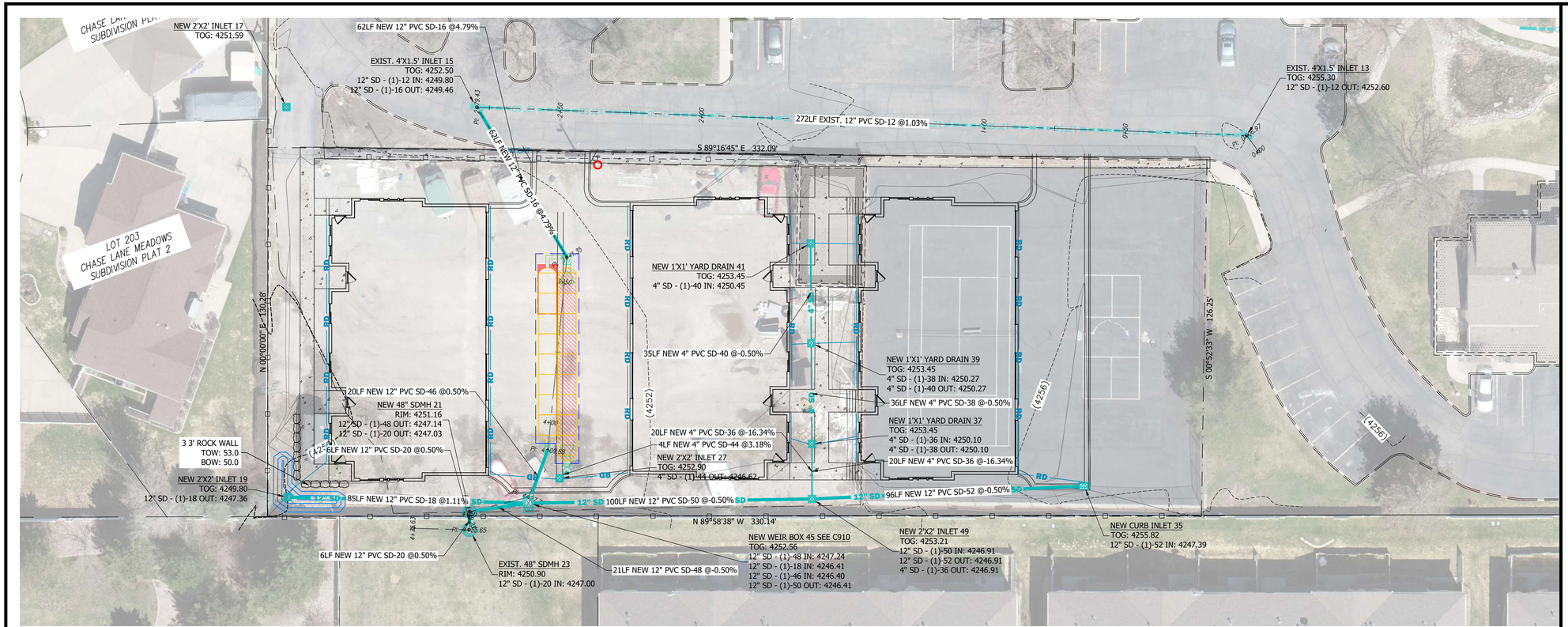

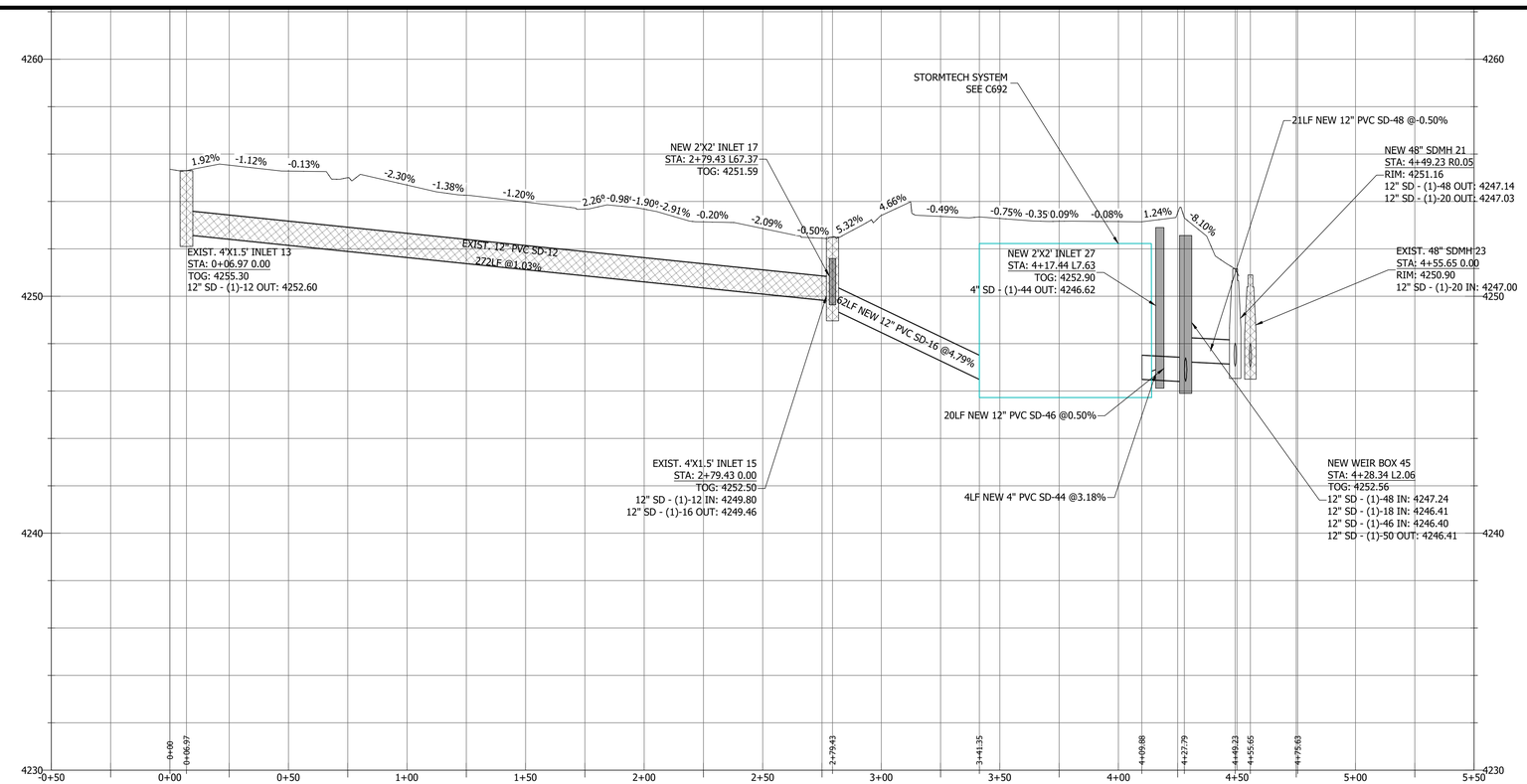

Know what's below. Call 811 before you dig.

BLUE STAKES OF UTAH
UTILITY NOTIFICATION CENTER, INC.
www.bluestakes.org
1-800-662-4111

1470 South 600 West
Woods Cross, UT 84010
Phone 801.298.2236
www.Entellus.com
Entellus

DEVELOPER

ERIC WOOD
Contact: ERIC WOOD

Phone: 801-971-7086
ERICROBERTWOOD@GMAIL.COM

PRELIMINARY NOT FOR CONSTRUCTION

PHEASANTBROOK PH 6 ADDITION

265 PHEASANTBROOK DRIVE
PARCEL # 02034:0093 PHEASANTBROOK PUD PHASE IV
LOCATED IN SECTION 7, T.2N., R.1E., S.L.B.&M.
CENTERVILLE CITY, DAVIS COUNTY, UTAH

REVISIONS

DRAWN: CSA	2023-05-22
APPROVED: ---	2023-05-22
PROJECT #:	2009002
SET 2009002 23-05-03.dwg	

C720

STORM SEWER PROFILE 1

\\Entellus-DC-UTAH\2009002\D_PRODUCTION\Civil\04_Plan Set\SET 2009002 23-05-03.dwg 2023-05-22 3:28:54 PM CHRISTOPHER ARGYLE

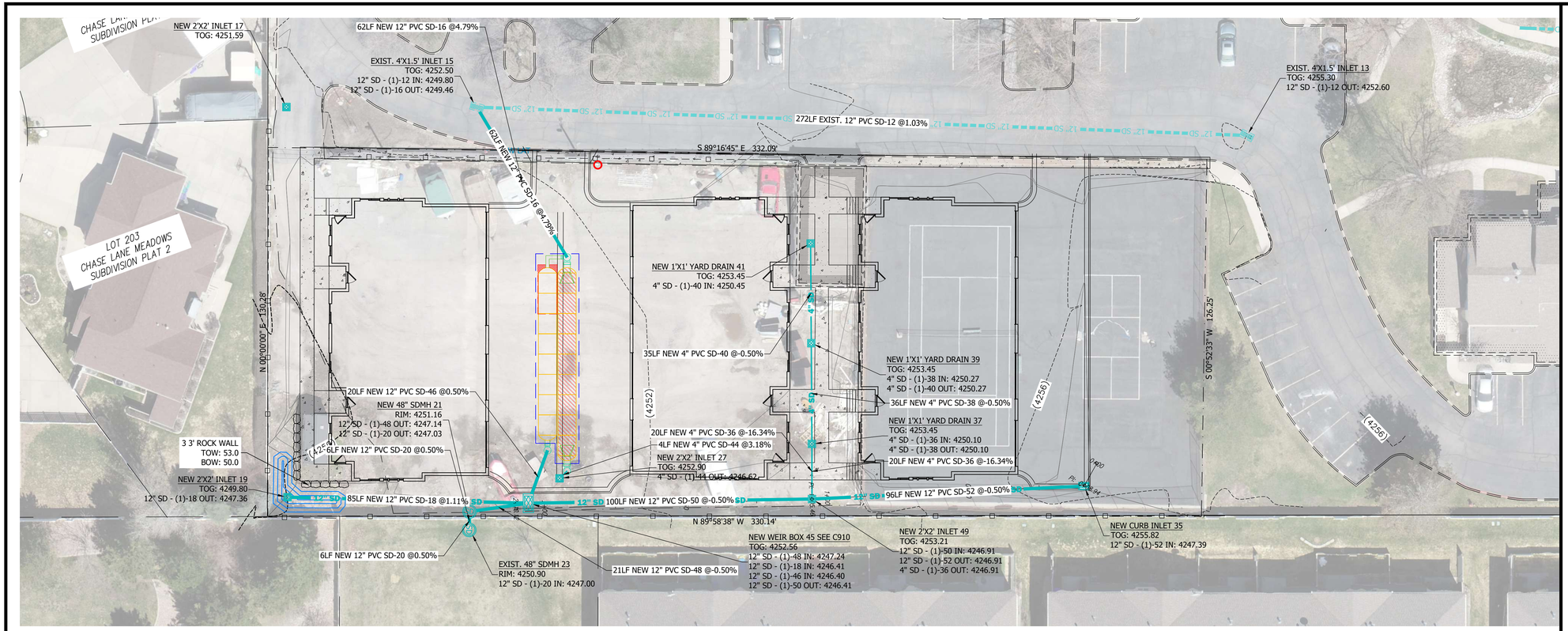

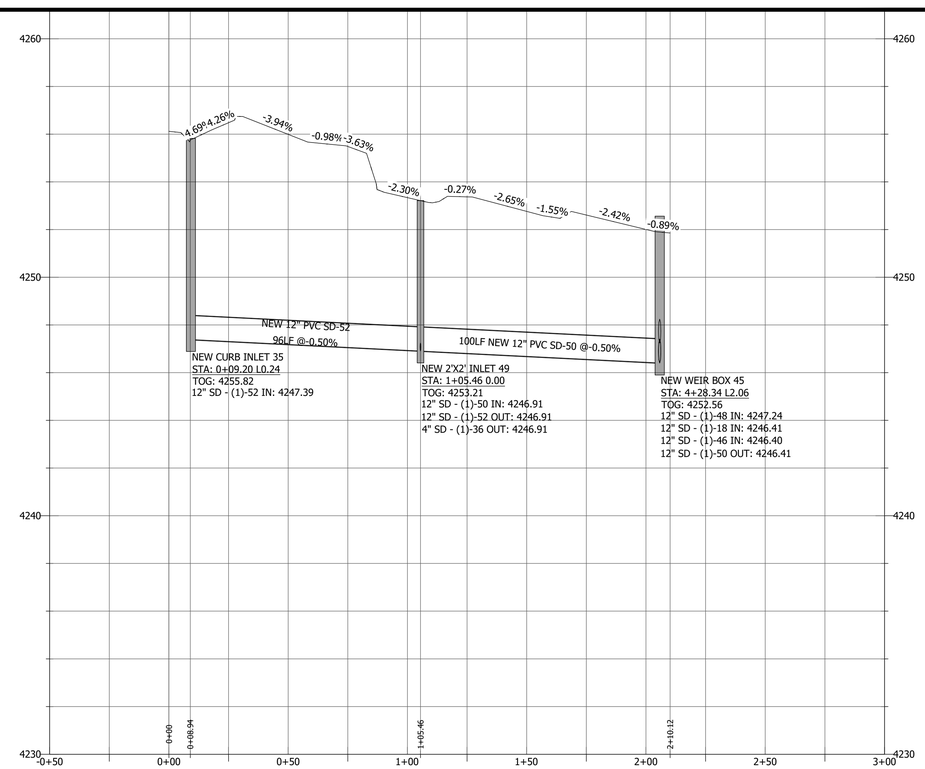

20 0 20 40 60
SCALE: 1" = 20'

30 0 30 60 90
SCALE: 1" = 30'

Know what's below.
Call 811 before you dig.
BLUE STAKES OF UTAH
UTILITY NOTIFICATION CENTER, INC.
www.bluestakes.org
1-800-662-4111

1470 South 600 West
Woods Cross, UT 84010
Phone 801.298.2236
www.Entellus.com
Entellus

DEVELOPER

ERIC WOOD
Contact: ERIC WOOD

Phone: 801-971-7086
ERICROBERTWOOD@GMAIL.COM

PRELIMINARY NOT FOR CONSTRUCTION

PHEASANTBROOK PH 6 ADDITION

266 PHEASANTBROOK DRIVE
PARCEL # 02034:0093 PHEASANTBROOK PUD PHASE IV
LOCATED IN SECTION 7, T.2N., R.1E., S.L.B.&M.
CENTERVILLE CITY, DAVIS COUNTY, UTAH

REVISIONS

DRAWN: CSA	2023-05-22
APPROVED: ---	2023-05-22
PROJECT #:	2009002
SET 2009002 23-05-03.dwg	

C730

STORM SEWER PROFILE 2

\\Entellus-DC-UTAH\2009002\D_PRODUCTION\Civil\04_Plan Set\SET 2009002 23-05-03.dwg 2023-05-22 3:29:04 PM CHRISTOPHER ARGYLE

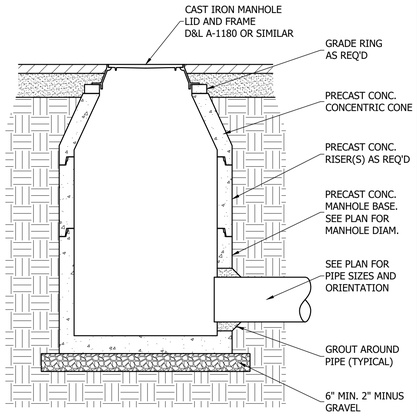

PRIVATE CONCENTRIC CONE STORM DRAIN MANHOLE

SD-1 / C600 TYPICAL
N.T.S.

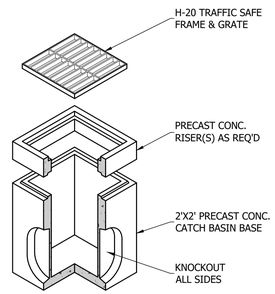

PRIVATE STORM DRAIN 2'X2' CATCH BASIN

SD-1 / C600 TYPICAL
N.T.S.

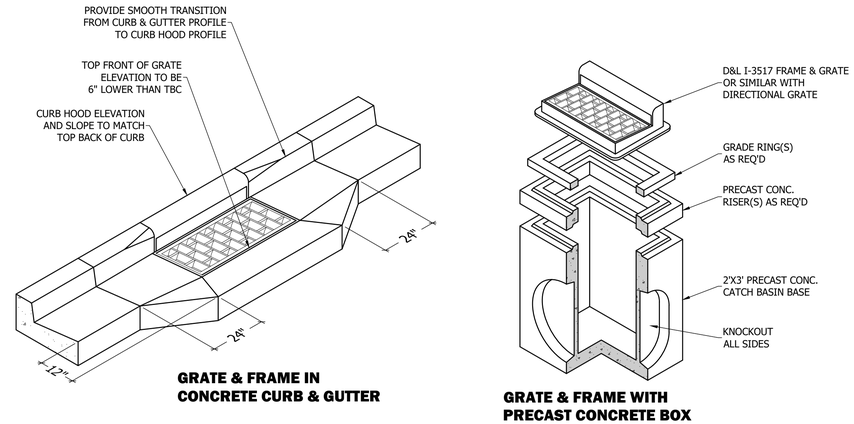

PRIVATE STORM DRAIN CURB INLET BOX

SD-1 / C600 TYPICAL
N.T.S.

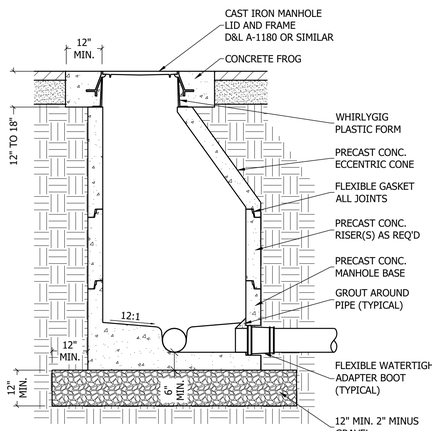

SECTION VIEW

NOTES

1. PRECAST CONCRETE MANHOLE IS TO MEET AASHTO HS-20 LOADING SPECIFICATION.
2. MINIMUM MANHOLE SIZE IS 48 INCHES IN DIAMETER.
3. MANHOLES WITH THREE OR MORE CONNECTIONS ARE TO BE 60 INCHES IN DIAMETER.
4. CONCRETE IS TO BE 4,000 PSI TEST.
5. ALL JOINTS BETWEEN PRECAST SECTIONS ARE TO BE SEALED WITH A FLEXIBLE GASKET.
6. ALL PIPE CONNECTIONS ARE TO BE SEALED WITH A FLEXIBLE ADAPTER BOOT, AND GROUTED IN PLACE INSIDE THE MANHOLE BASE.

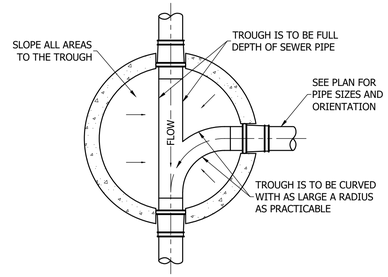

PLAN VIEW

PRIVATE ECCENTRIC CONE SANITARY SEWER MANHOLE

SS-1 / C600 TYPICAL
N.T.S.

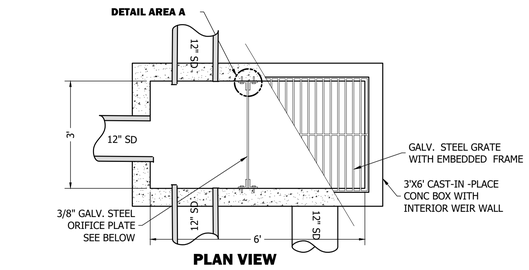

PLAN VIEW

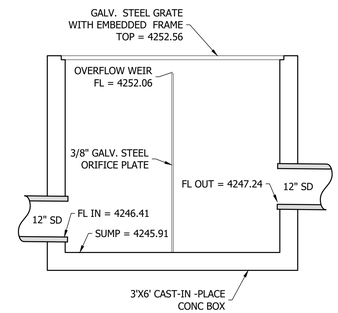

SECTION VIEW

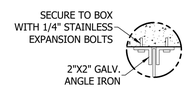

DETAIL AREA A

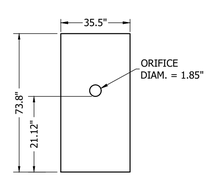

ORIFICE PLATE

PRIVATE STORM DRAIN CONTROL BOX WITH OVERFLOW WEIR

SD-1 / C600 TYPICAL
N.T.S.

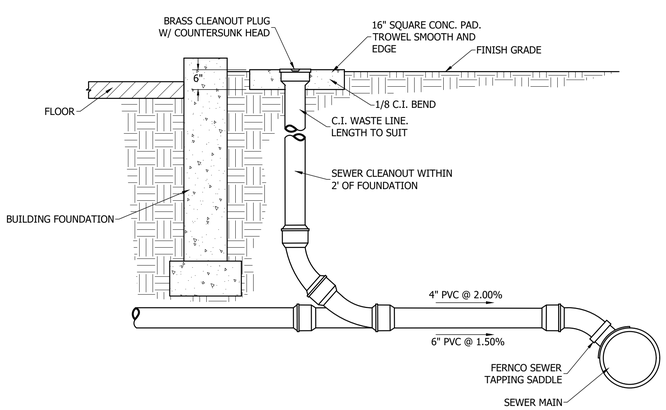

SEWER LATERAL SERVICE

SS-1 / C600 TYPICAL
N.T.S.

Entellus
1470 South 600 West
Woods Cross, UT 84010
Phone 801.298.2236
www.Entellus.com

DEVELOPER
ERIC WOOD
Contact: ERIC WOOD

Phone: 801-971-7086
ERICROBERTWOOD@GMAIL.COM

PRELIMINARY NOT FOR CONSTRUCTION

PHEASANTBROOK PH 6 ADDITION

265 PHEASANTBROOK DRIVE
PARCEL # 02034-0093 PHEASANTBROOK PUD PHASE IV
LOCATED IN SECTION 7, T.2N., R.1E., S.L.B.&M.
CENTERVILLE CITY, DAVIS COUNTY, UTAH

REVISIONS

DRAWN: CSA	2023-05-22
APPROVED: ---	2023-05-22
PROJECT #:	2009002
SET 2009002 23-05-03.dwg	

C910

UTILITY DETAILS

\\Entellus-DC-UTAH\2009002\D_PRODUCTION\Civil\04_Plan Set\SET 2009002 23-05-03.dwg 2023-05-22 3:29:09 PM CHRISTOPHER ARGYLE

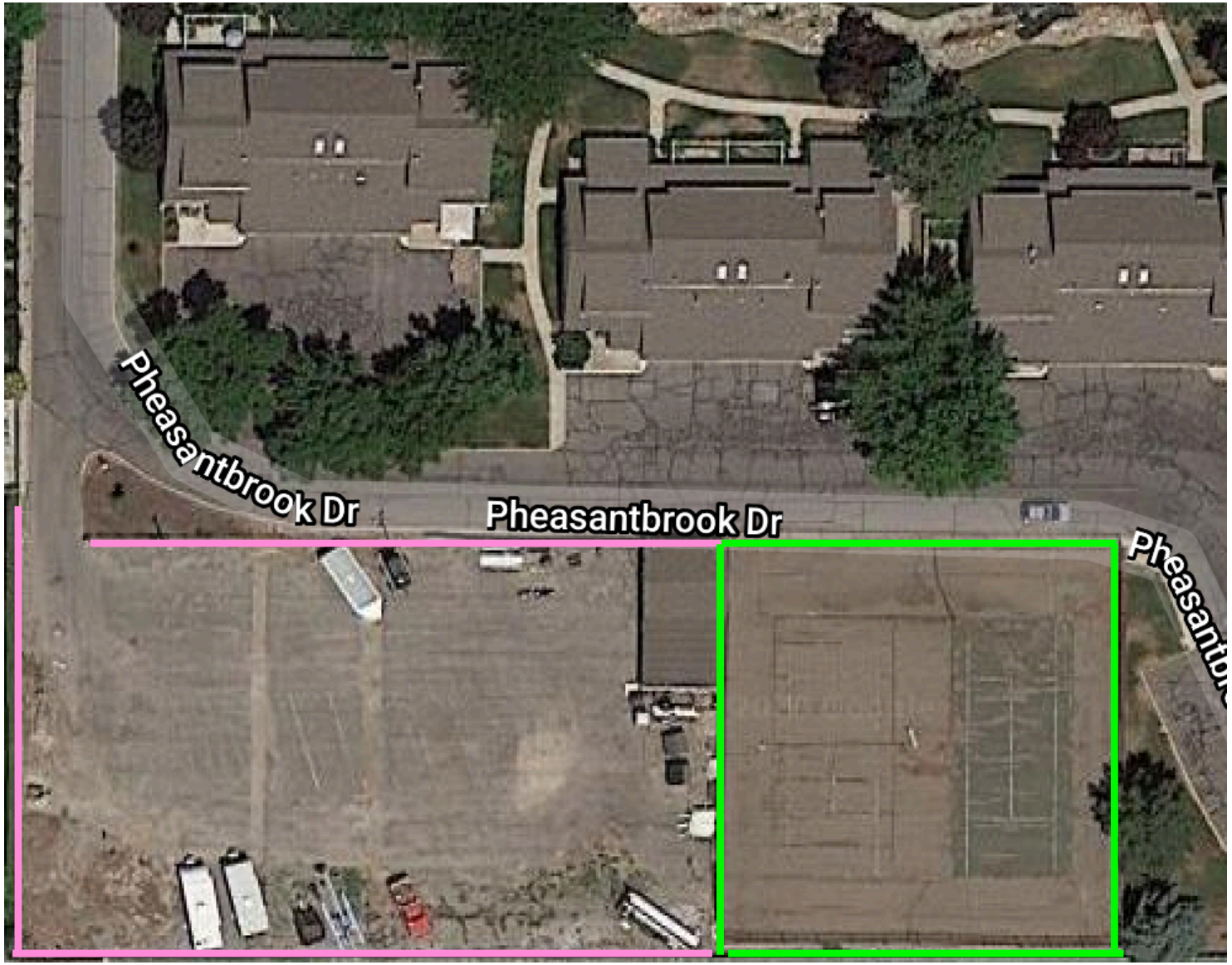

Existing fences

10 foot chain-link fence

6 foot vinyl fence

Proposed fences

6 foot wood fence enclosure for dumpster

6 foot vinyl fence

Landscaping information

Water efficient sod

Park bench

Shade trees

PHEASANTBROOK PART VI SUBDIVISION PUD AMENDED

LOCATED IN THE NORTH 1/2 CORNER OF SEC. 7, T.2N., R.1E., S.L.B.&M.
CENTERVILLE CITY, DAVIS COUNTY, UTAH
FINAL PLAT, MAY 2023

LEGEND

- SUBDIVISION LINE
- UNIT LINE
- ADJACENT PROPERTY
- ROAD CENTERLINE
- SECTION LINE
- TIE TO MONUMENT
- COMMON AREA
- LIMITED COMMON AREA
- PRIVATE AREA
- 5/8" X 24" REBAR WITH "ENTELLUS" CAP, TO BE SET, AT CORNER (UNLESS OTHERWISE NOTED)
- FOUND LOT CORNER MARKER (AS NOTED)

VICINITY MAP

SCALE: 1" = 40'

ADDRESS TABLE

UNIT 1A	XXX WEST PHEASANTBROOK DR
UNIT 1B	XXX WEST PHEASANTBROOK DR
UNIT 1C	XXX WEST PHEASANTBROOK DR
UNIT 1D	XXX WEST PHEASANTBROOK DR
UNIT 2A	XXX WEST PHEASANTBROOK DR
UNIT 2B	XXX WEST PHEASANTBROOK DR
UNIT 2C	XXX WEST PHEASANTBROOK DR
UNIT 2D	XXX WEST PHEASANTBROOK DR
UNIT 3A	XXX WEST PHEASANTBROOK DR
UNIT 3B	XXX WEST PHEASANTBROOK DR
UNIT 3C	XXX WEST PHEASANTBROOK DR
UNIT 3D	XXX WEST PHEASANTBROOK DR

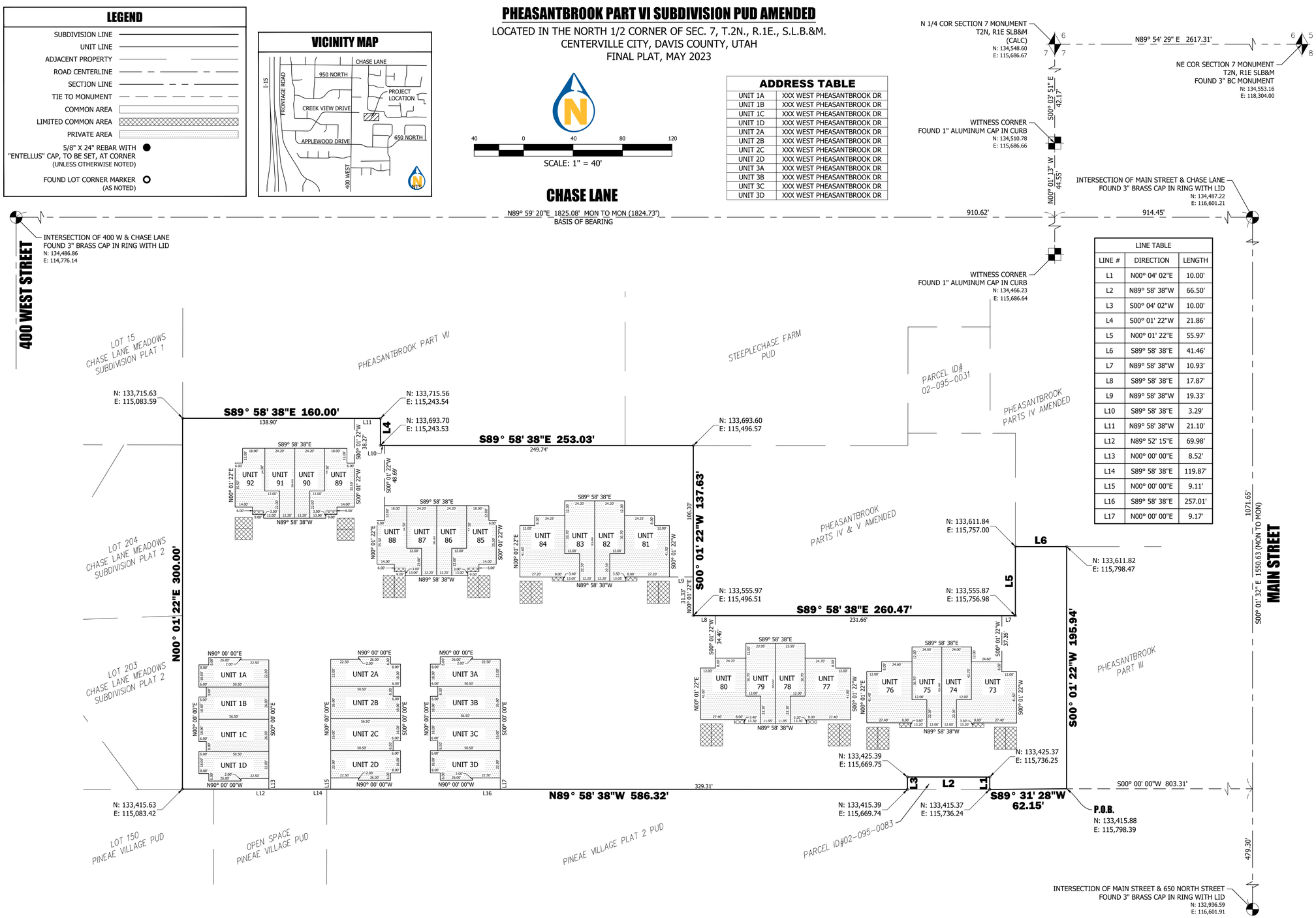

LINE TABLE

LINE #	DIRECTION	LENGTH
L1	N00° 04' 02"E	10.00'
L2	N89° 58' 38"W	66.50'
L3	S00° 04' 02"W	10.00'
L4	S00° 01' 22"W	21.86'
L5	N00° 01' 22"E	55.97'
L6	S89° 58' 38"E	41.46'
L7	N89° 58' 38"W	10.93'
L8	S89° 58' 38"E	17.87'
L9	N89° 58' 38"W	19.33'
L10	S89° 58' 38"E	3.29'
L11	N89° 58' 38"W	21.10'
L12	N89° 52' 15"E	69.98'
L13	N00° 00' 00"E	8.52'
L14	S89° 58' 38"E	119.87'
L15	N00° 00' 00"E	9.11'
L16	S89° 58' 38"E	257.01'
L17	N00° 00' 00"E	9.17'

SURVEYOR'S CERTIFICATE

I, STEPHEN M. BURT, A PROFESSIONAL LAND SURVEYOR HOLDING CERTIFICATE NO. 7098776 AS PRESCRIBED UNDER THE LAWS OF THE STATE OF UTAH, DO HEREBY CERTIFY THAT BY THE AUTHORITY OF THE OWNERS I HAVE MADE A SURVEY OF THE TRACT OF LAND SHOWN ON THIS PLAT AND DESCRIBED HEREWITH AND HAVE SUBDIVIDED SAID TRACT OF LAND INTO LOTS AND STREETS HEREAFTER TO BE KNOWN AS PHEASANTBROOK PART VI SUBDIVISION PUD AMENDED AND THAT SAME HAS BEEN CORRECTLY SURVEYED AND STAKED ON THE GROUND AS SHOWN.

STEPHEN M. BURT, P.L.S. UT #7098776 DATE

DESCRIPTION

BEGINNING AT A POINT NORTH 89°59'20" EAST 1825.08 FEET ALONG THE CENTERLINE OF CHASE LANE AND SOUTH 00°01'32" E 1071.65 FEET ALONG THE CENTERLINE OF MAIN STREET AND SOUTH 00°00'00" WEST 803.31 FEET FROM THE MONUMENT AT THE INTERSECTION OF CHASE LANE AND 400 WEST STREET IN CENTERVILLE, UTAH, AND RUNNING THENCE SOUTH 89°31'28" WEST 62.15 FEET ALONG THE NORTH LINE OF PINEAE VILLAGE PLAT 2 PUD SUBDIVISION; THENCE NORTH 00°04'02" EAST 10.00 FEET; THENCE NORTH 89°58'38" WEST 66.50 FEET; THENCE SOUTH 00°04'02" WEST 10.00 FEET TO SAID NORTH LINE; THENCE NORTH 89°58'38" WEST 586.32 FEET ALONG SAID NORTH LINE TO THE SOUTHEAST CORNER OF CHASE LANE MEADOWS SUBDIVISION PLAT 2; THENCE NORTH 00°01'22" EAST 300.00 FEET ALONG THE EAST LINE OF SAID SUBDIVISION AND THE EAST LINE OF CHASE LANE MEADOWS SUBDIVISION PLAT 1 TO THE SOUTHWEST CORNER OF PHEASANTBROOK PART VII SUBDIVISION PLAT; THENCE ALONG SAID SUBDIVISION THE FOLLOWING (3) COURSES: 1) SOUTH 89°58'38" EAST 160.00 FEET; 2) SOUTH 00°01'22" WEST 21.86 FEET; 3) SOUTH 89°58'38" 253.03 FEET ALONG SAID SUBDIVISION AND THE SOUTH LINE OF STEEPLECHASE FARM PUD PLAT TO A WEST CORNER OF PHEASANTBROOK PART IV & V AMENDED PLAT; THENCE ALONG SAID PLAT THE FOLLOWING (4) COURSES: 1) SOUTH 00°01'22" WEST 137.63 FEET; 2) SOUTH 89°58'38" EAST 260.47; 3) NORTH 00°01'22" EAST 55.97 FEET; 4) THENCE SOUTH 89°58'38" EAST 41.46 FEET TO THE NORTHWEST CORNER OF PHEASANTBROOK PART III PLAT; THENCE SOUTH 00°01'22" WEST 195.94 FEET ALONG THE WEST LINE OF SAID SUBDIVISION TO THE SOUTHWEST CORNER OF SAID SUBDIVISION AND TO THE POINT OF BEGINNING.

CONTAINS 3.729 ACRES.

OWNER'S DEDICATION

KNOWN ALL MEN BY THESE PRESENTS THAT THE UNDERSIGNED OWNERS OF THE ABOVE DESCRIBED TRACT OF LAND, HAVING CAUSED SAME TO BE SUBDIVIDED INTO PRIVATE UNITS, LIMITED COMMON SPACE, AND COMMON SPACE, HEREAFTER TO BE KNOWN AS PHEASANTBROOK PART VI SUBDIVISION PUD AMENDED, DO HEREBY DEDICATE FOR PERPETUAL USE OF THE PUBLIC ALL PARCELS OF LAND SHOWN ON THIS PLAT AS INTENDED FOR PUBLIC USE. AND DO WARRANT, DEFEND, AND SAVE THE CITY HARMLESS AGAINST ANY EASEMENTS OR OTHER ENCUMBRANCES ON THE DEDICATED STREETS.

SIGNED THIS _____ DAY OF _____, 20____.

MEMBER, ASSOCIATION OF UNIT OWNERS OF PHEASANTBROOK PUD

CORPORATE ACKNOWLEDGMENT

ON THE ____ DAY OF _____, 20_____ THERE PERSONALLY APPEARED BEFORE ME, _____, WHO BEING BY ME DULY SWORN DID SAY THAT HE/SHE IS THE _____OF PHEASANTBROOK HOME OWNERS ASSOCIATION A UTAH NON-PROFIT CORPORATION AND THAT THE FOREGOING INSTRUMENT WAS SIGNED IN BEHALF OF SAID CORPORATION, AND HE/SHE ACKNOWLEDGED TO ME THAT SAID CORPORATION EXECUTED THE SAME.

NOTARY PUBLIC: _____,

RESIDENCE: _____,

MY COMMISSION EXPIRES: _____,

NOTES

1. ALL COORDINATES SHOWN HEREON ARE BASED ON THE DAVIS COUNTY SURVEY SYSTEM DATUM.
2. APPROVAL OF THIS DEVELOPMENT PLAT BY CENTERVILLE CITY DOES NOT CONSTITUTE ANY REPRESENTATION AS TO THE ADEQUACY OF SUB-SURFACE SOIL CONDITIONS NOR TO THE LOCATION OR DEPTH OF GROUNDWATER TABLES.
3. PUBLIC UTILITY EASEMENTS ARE ALSO DRAINAGE EASEMENTS.
4. THE SUBDIVISION PLAT IS BASED ON A 2023 SURVEY BY ENTELLUS FILED AS S#XXXX IN THE DAVIS COUNTY SURVEYOR'S OFFICE.

Entellus™
1470 South 600 West
Woods Cross, UT 84010
Phone 801.298.2236
www.Entellus.com
PROJECT #2009002 2023/05/02 JJS

CITY ENGINEER

RECOMMENDED FOR APPROVAL THIS _____ DAY OF _____, 20____.

CENTERVILLE CITY ENGINEER

PLANNING COMMISSION

RECOMMENDED FOR APPROVAL THIS _____ DAY OF _____, 20_____, BY THE PLANNING COMMISSION OF CENTERVILLE CITY.

CHAIRMAN

CITY ATTORNEY

RECOMMENDED FOR APPROVAL THIS _____ DAY OF _____, 20____.

CENTERVILLE CITY ATTORNEY

CENTERVILLE CITY COUNCIL

PRESENTED TO THE CITY COUNCIL OF CENTERVILLE CITY, UTAH, THIS _____ DAY OF _____, 20_____, AT WHICH TIME THIS PROJECT WAS APPROVED AND ACCEPTED.

CITY RECORDER ATTEST: _____

MAYOR: _____

DAVIS COUNTY RECORDER

ENTRY NO. _____ FEE PAID _____

FILED FOR RECORD AND RECORDED THIS _____ DAY OF _____, 20____,

AT _____ IN BOOK _____ OF _____

COUNTY RECORDER: _____

BY: _____
DEPUTY

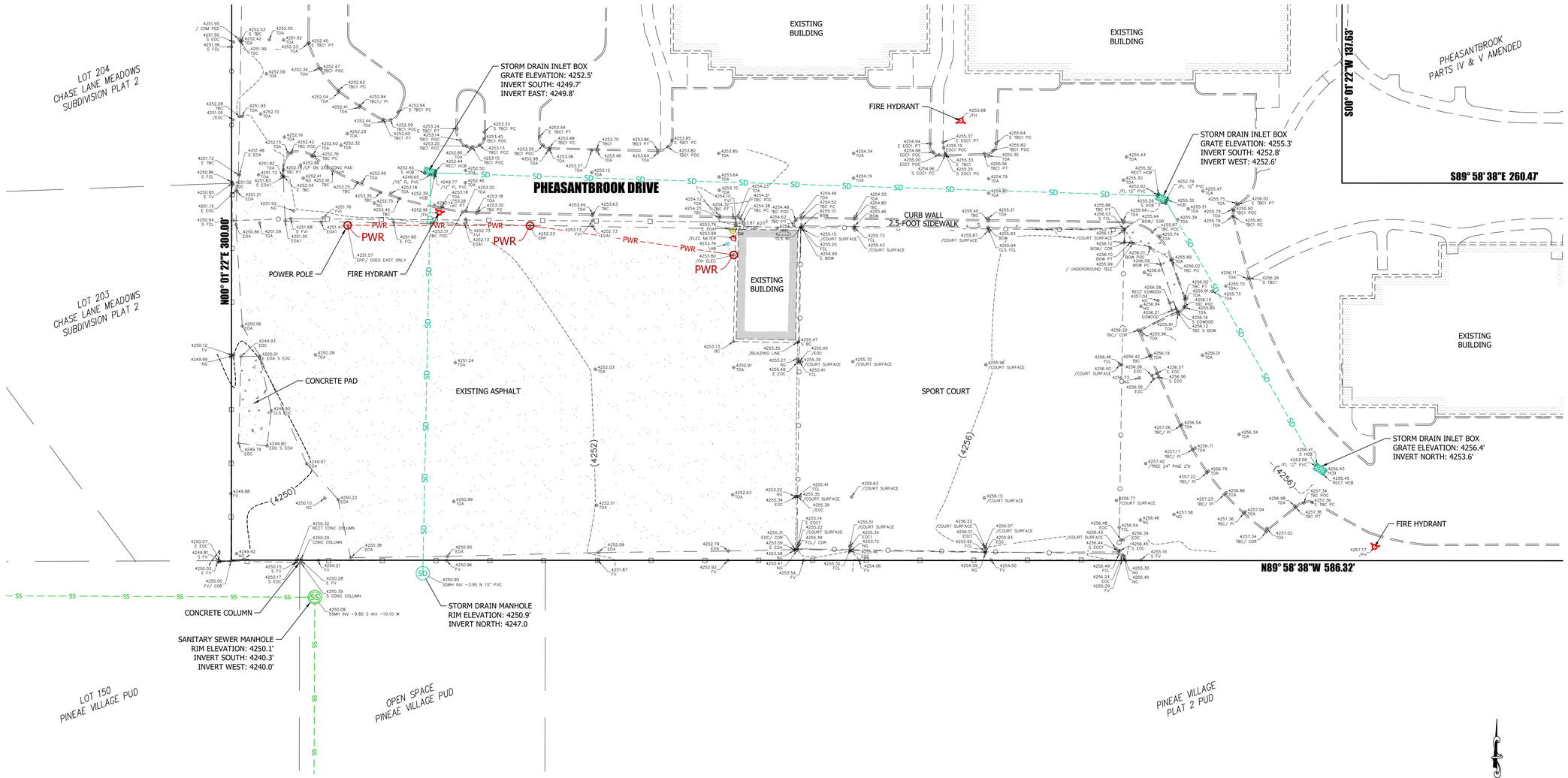

20 0 20 40 60

SCALE: 1" = 20'

TOPOGRAPHIC PLAN

THIS DRAWING IS FOR TOPOGRAPHICAL INFORMATION ONLY. ALL BOUNDARIES AND EASEMENTS ARE APPROXIMATE AND ARE BASED SOLELY ON THE INFORMATION AVAILABLE ON THE SUBDIVISION PLAT OR OTHERWISE PROVIDED TO THE SURVEYOR.

LEGEND

PROPERTY LINE	
ADJACENT PROPERTY	
INDEX CONTOUR LINE	(4300)
MINOR CONTOUR LINE	
EDGE OF PAVEMENT	
CURB, GUTTER, SIDEWALK	
STORM DRAIN LINE	SD
SANITARY SEWER LINE	SS
VINYL FENCE LINE	
CHAIN LINK FENCE LINE	

1470 South 600 West
Woods Cross, UT 84010
Phone 801.298.2236
www.Entellus.com
Entellus™

PRELIMINARY
NOT FOR
CONSTRUCTION

ERIC WOOD

PART OF THE COMMON AREA, PHEASANTBROOK PART V1
PARCEL ID # 02-034-0093
LOCATED IN THE NORTH 1/4 OF SECTION 7, T.2N., R.1E., S.L.B.&M.
CENTERVILLE CITY, DAVIS COUNTY, UTAH

DRAWN: JJS	2023/05/03
APPROVED: SMB	2023/05/05
PROJECT #:	2009002
SURVEY 2009002.dwg	

V200

TOPOGRAPHIC SURVEY

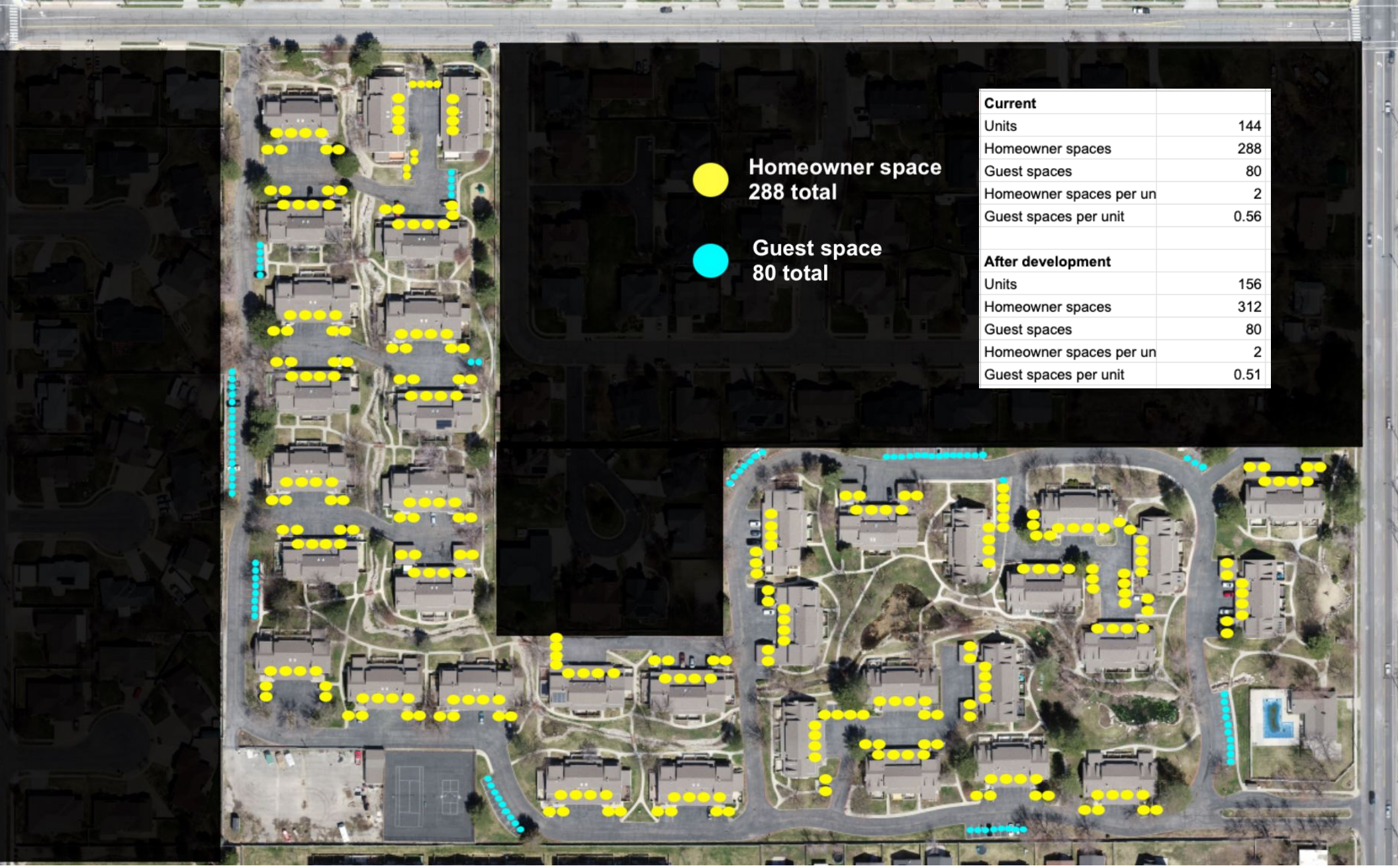

Current	
Units	144
Homeowner spaces	288
Guest spaces	80
Homeowner spaces per un	2
Guest spaces per unit	0.56
After development	
Units	156
Homeowner spaces	312
Guest spaces	80
Homeowner spaces per un	2
Guest spaces per unit	0.51

Parking analysis for Pheasantbrook addition

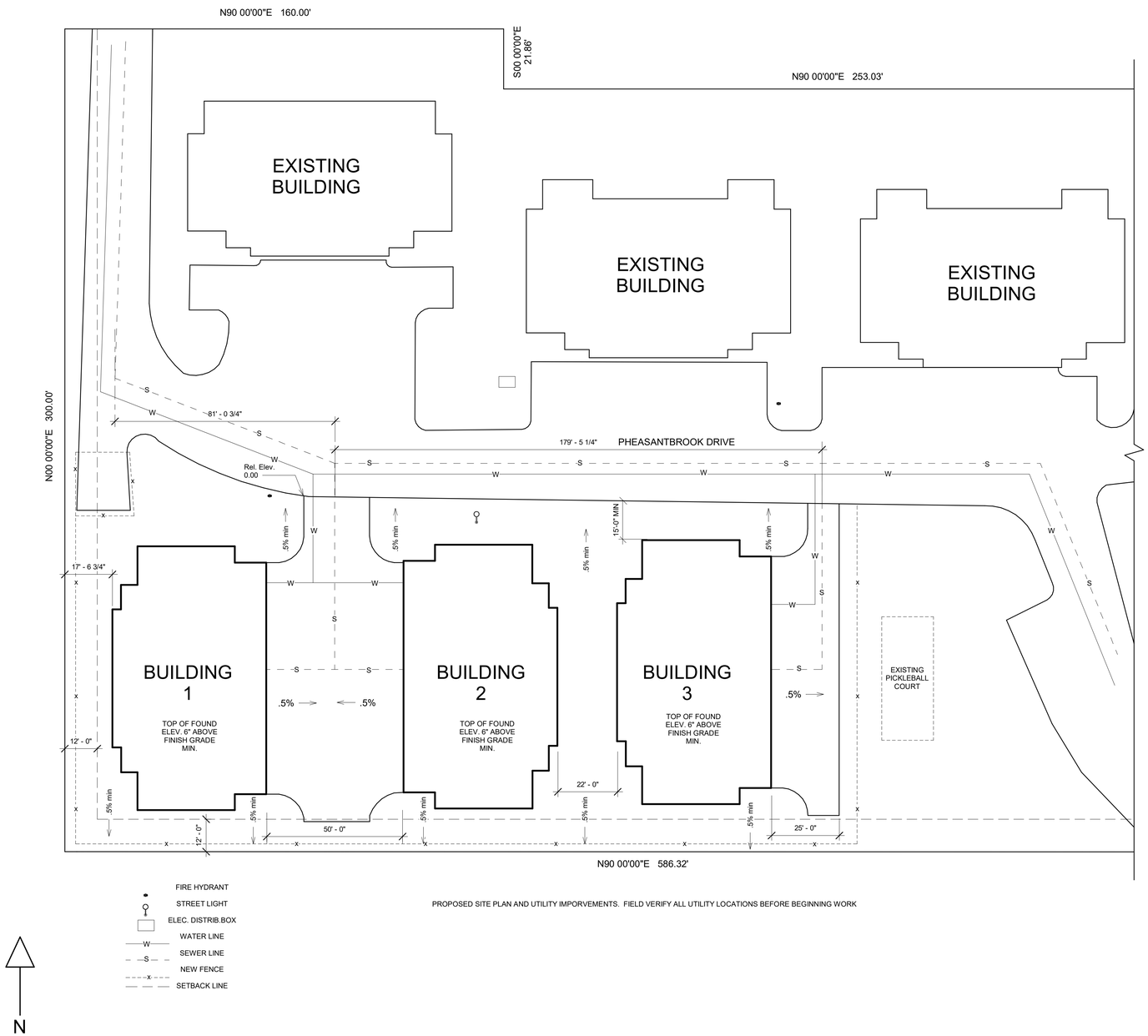

PROPOSED SITE PLAN AND UTILITY IMPORVEMENTS. FIELD VERIFY ALL UTILITY LOCATIONS BEFORE BEGINNING WORK

PROPOSED BUILDINGS IN PHEASANTBROOK PUD PORTIONS OF PARCEL 020340093

RELATIVE LEGAL DESCRIPTIONS

Building 1 (west building)
From the NW corner of parcel 020340093
south easterly along a line that is S05,00,00E 189.46'
To the point of beginning
Thence S 96.0'
Thence E 56'
Thence N 96.0'
Thence W 56' to point of beginning.

Building 2 (center building)
From the NW corner of parcel 020340093
south easterly along a line that is S33,00,00E 225.5'
To the point of beginning
Thence S 96.0'
Thence E 56'
Thence N 96.0'
Thence W 56' to point of beginning.

Building #3 (east building)
From the NW corner of parcel 020340093
south easterly along a line that is S47,00,00E 274.73'
To the point of beginning
Thence S 96.0'
Thence E 56'
Thence N 96.0'
Thence W 56' to point of beginning.

TABLE OF CONTENTS

C1	SITE PLAN
A001	FIRST FLOOR LAYOUT
A002	SECOND FLOOR LAYOUT
A003	FIRST FLOOR DIMENSIONED
A004	SECOND FLOOR DIMENSIONED
A005	ELEVATIONS
A006	ELEVATIONS
E001	FIRST FLOOR ELECTRICAL PLAN
E002	SECOND FLOOR ELECTRICAL PLAN
S0	ENGINEERING GENERAL NOTES
S1	ENGINEERING GENERAL NOTES
S2	ROOF FRAMING PLAN
S3	SECOND FLOOR FRAMING PLAN
S4	FIRST FLOOR FRAMING PLAN
S5	DETAILS
S6	DETAILS

MJ DRAFTING & DESIGN

265 PHEASANTBROOK DR.
CENTERVILLE UT 84014

1"=20'-0"

SITE PLAN

SHEET

C1

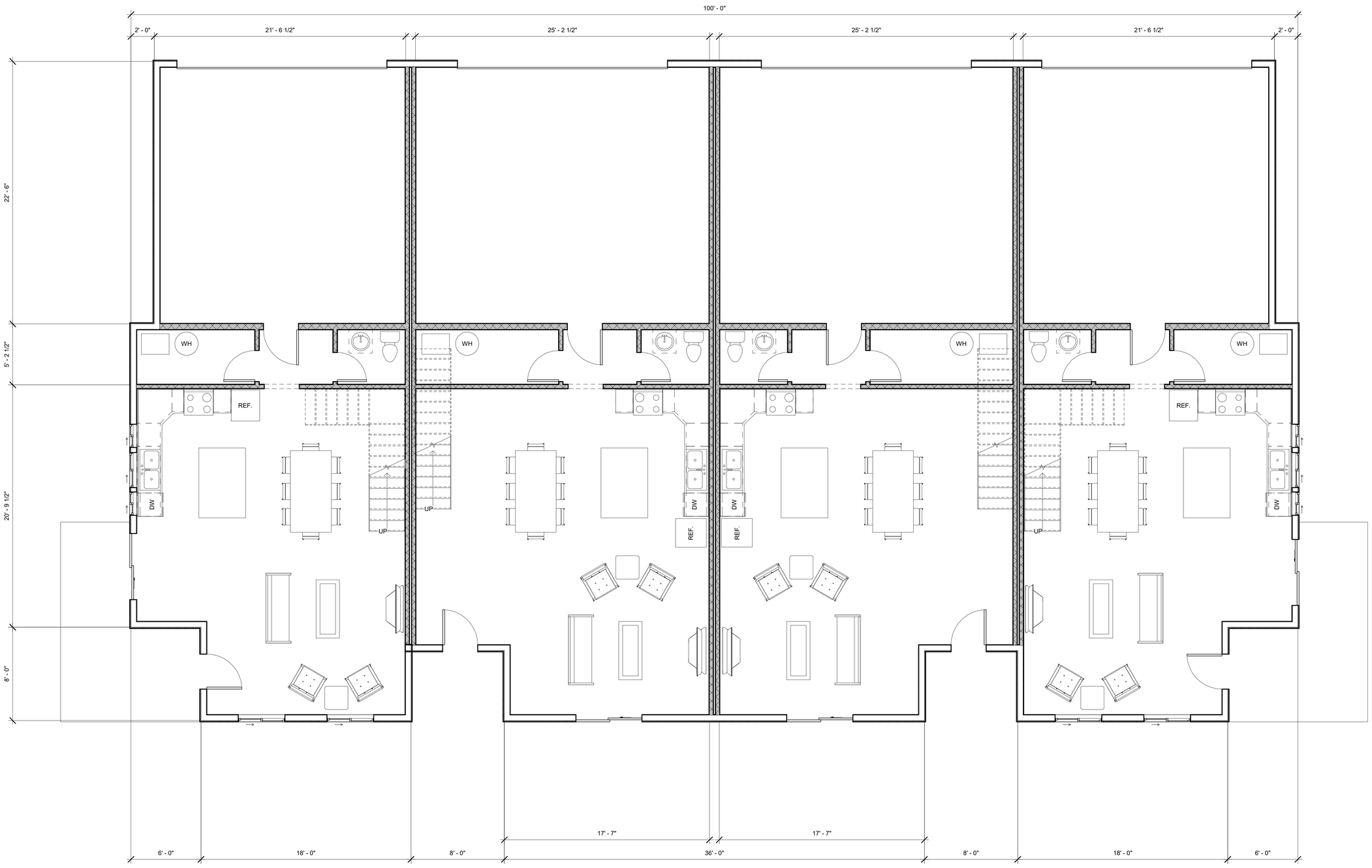

MJ DRAFTING & DESIGN

265 PHEASANTBROOK DR.
CENTERVILLE UT 84014

1/4"=1'-0"

FIRST FLOOR LAYOUT

SHEET

A001

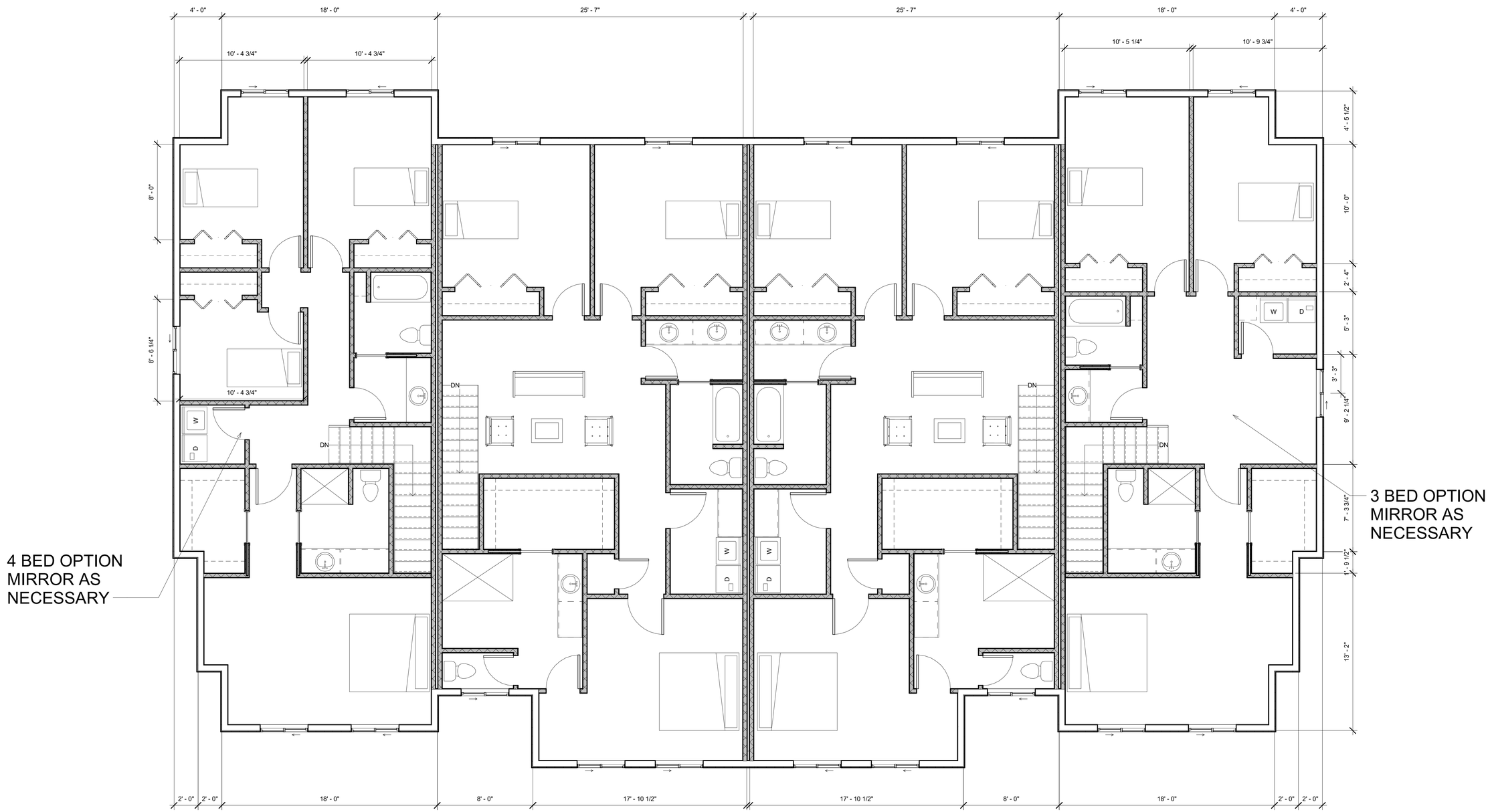

MJ DRAFTING & DESIGN

265 PHEASANTBROOK DR.
CENTERVILLE UT 84014

1/4"=1'-0"

SECOND FLOOR LAYOUT

SHEET

A002

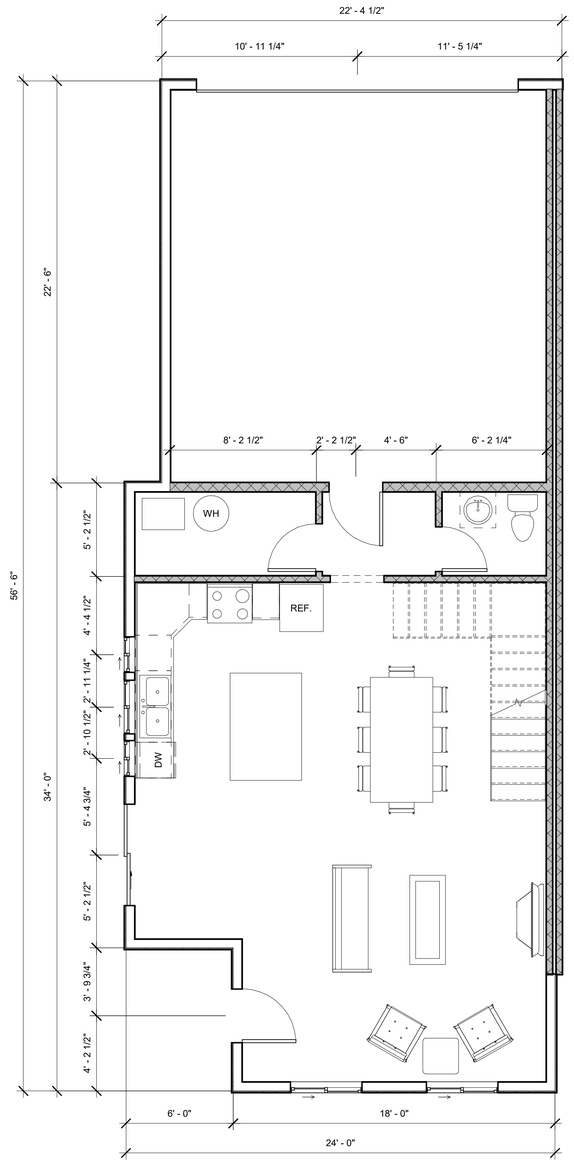

END APARTMENTS

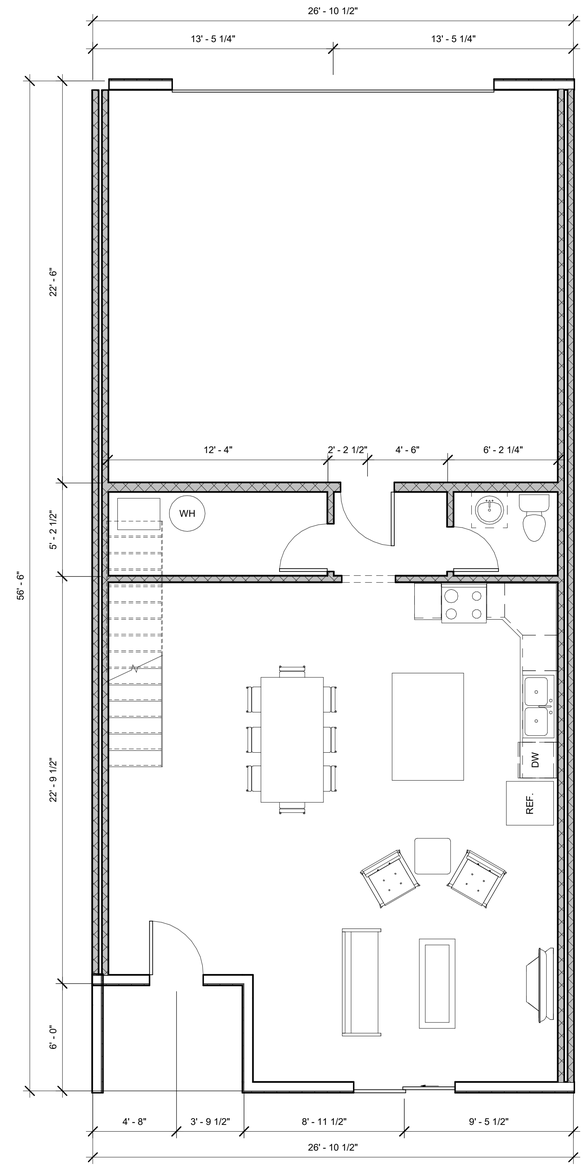

CENTER APARTMENTS

MIRROR APPARTMENT FLOORPLANS AS NECESSARY

MJ DRAFTING & DESIGN

265 PHEASANTBROOK DR.
CENTERVILLE UT 84014

1/4"=1'-0"

FIRST FLOOR DIMENSIONED

SHEET

A003

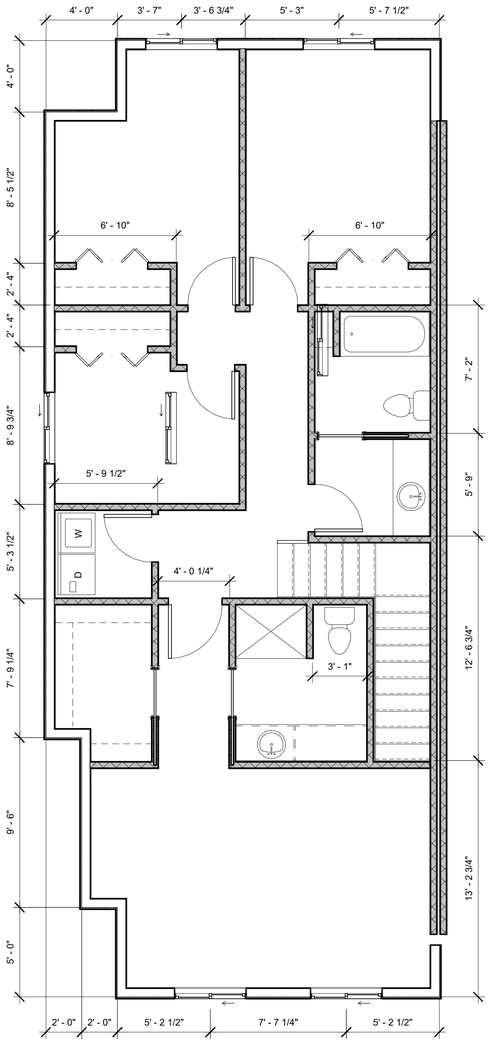

4 BEDROOM END APARTMENTS

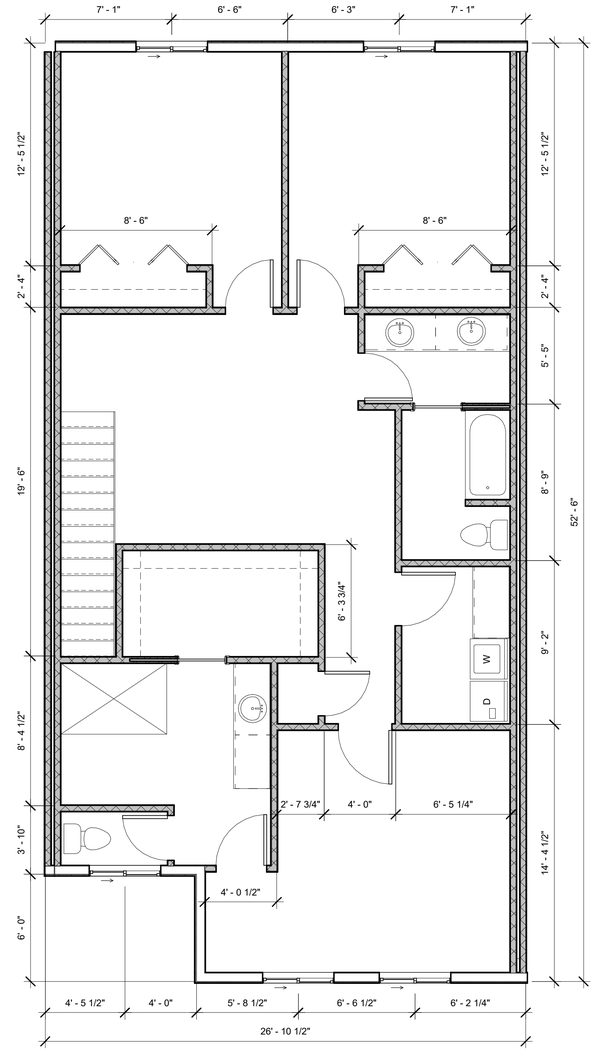

CENTER APARTMENTS

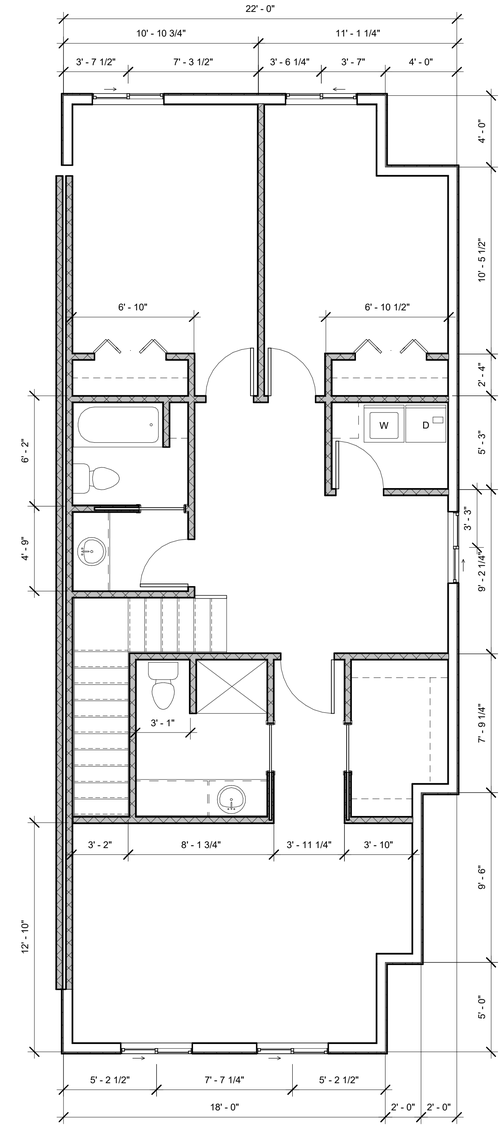

3 BEDROOM END APARTMENTS

MIRROR APPARTMENT FLOORPLANS AS NECESSARY

MJ DRAFTING & DESIGN

265 PHEASANTBROOK DR.
CENTERVILLE UT 84014

1/4"=1'-0"

SECOND FLOOR DIMENSIONED

SHEET

A004

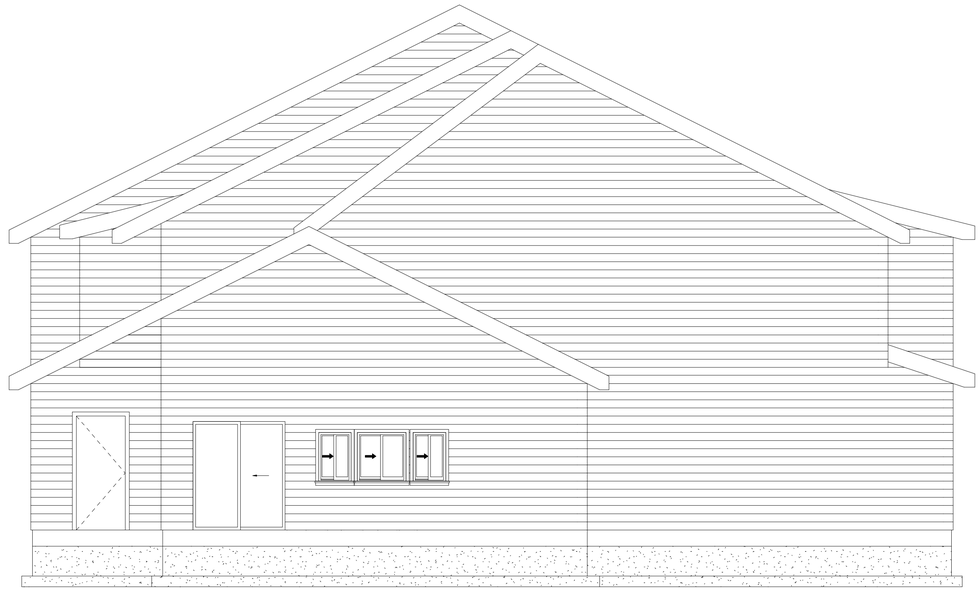

RIGHT SIDE

FRONT

MJ DRAFTING & DESIGN

265 PHEASANTBROOK DR.
CENTERVILLE UT 84014

1/4"=1'-0"

ELEVATIONS

SHEET

A005

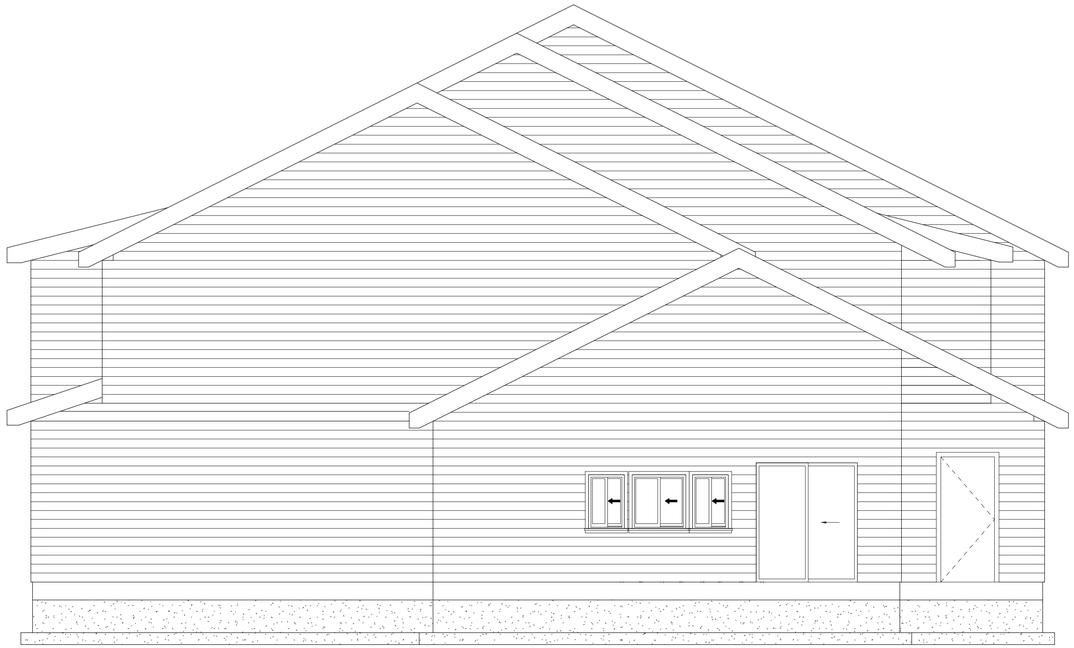

LEFT SIDE

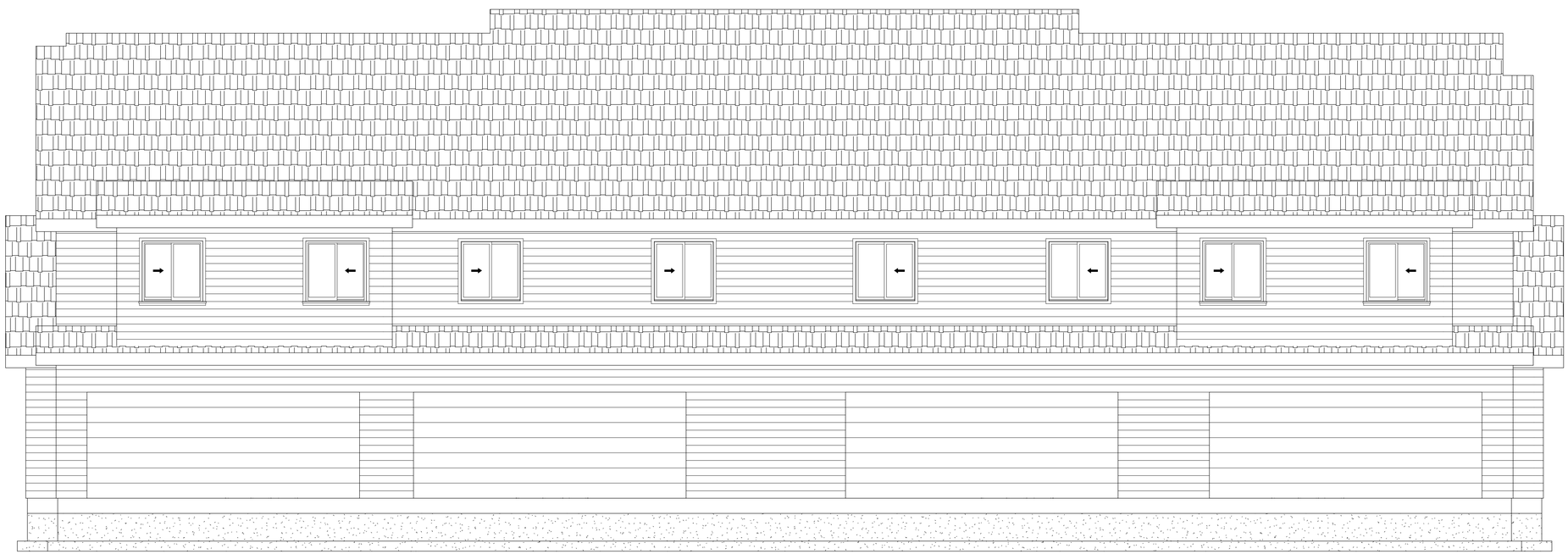

BACK

MJ DRAFTING & DESIGN

265 PHEASANTBROOK DR.
CENTERVILLE UT 84014

1/4"=1'-0"

ELEVATIONS

SHEET

A006

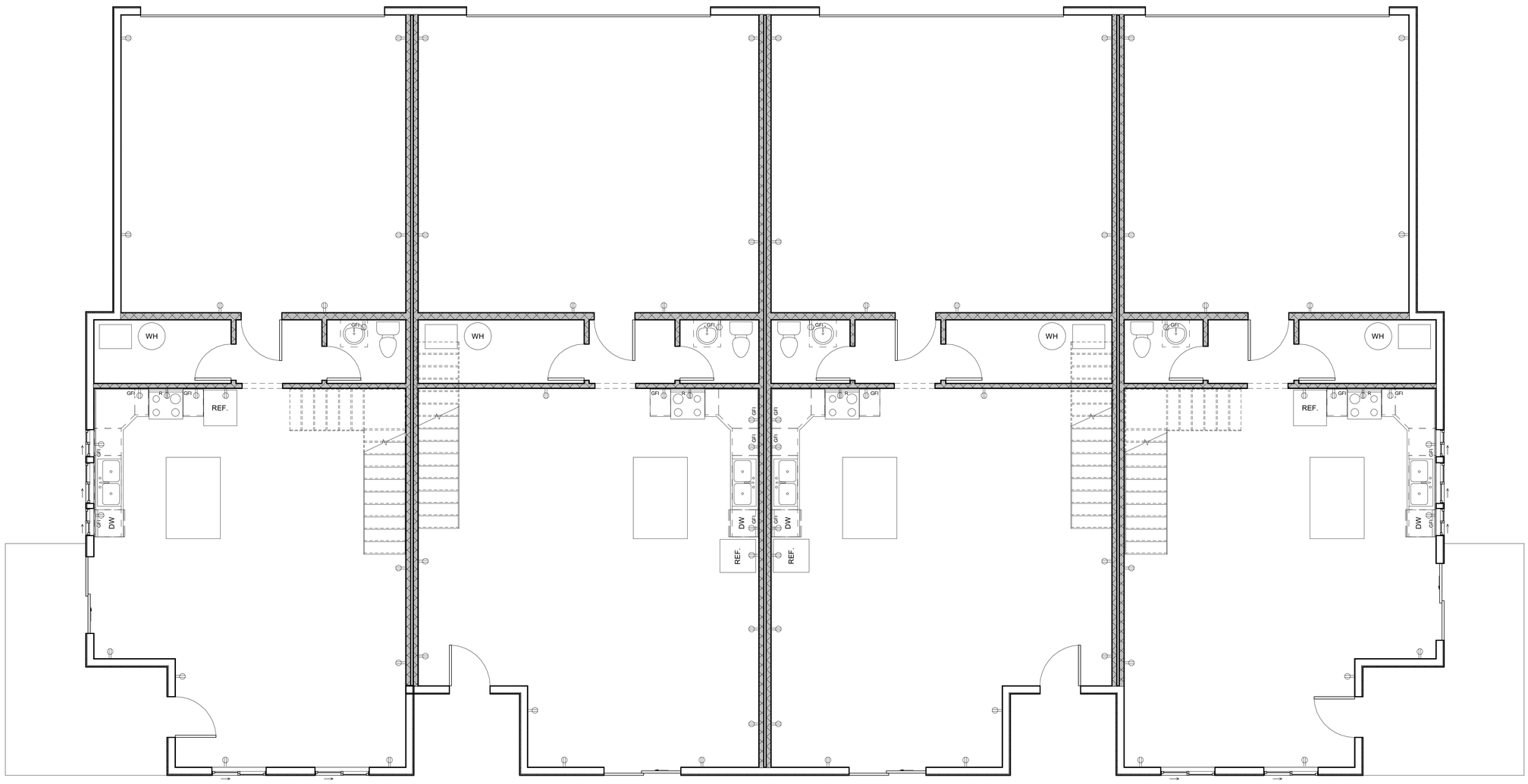

MJ DRAFTING & DESIGN

265 PHEASANTBROOK DR.
CENTERVILLE UT 84014

1/4"=1'-0"

FIRST FLOOR
ELECTRICAL

SHEET

E001

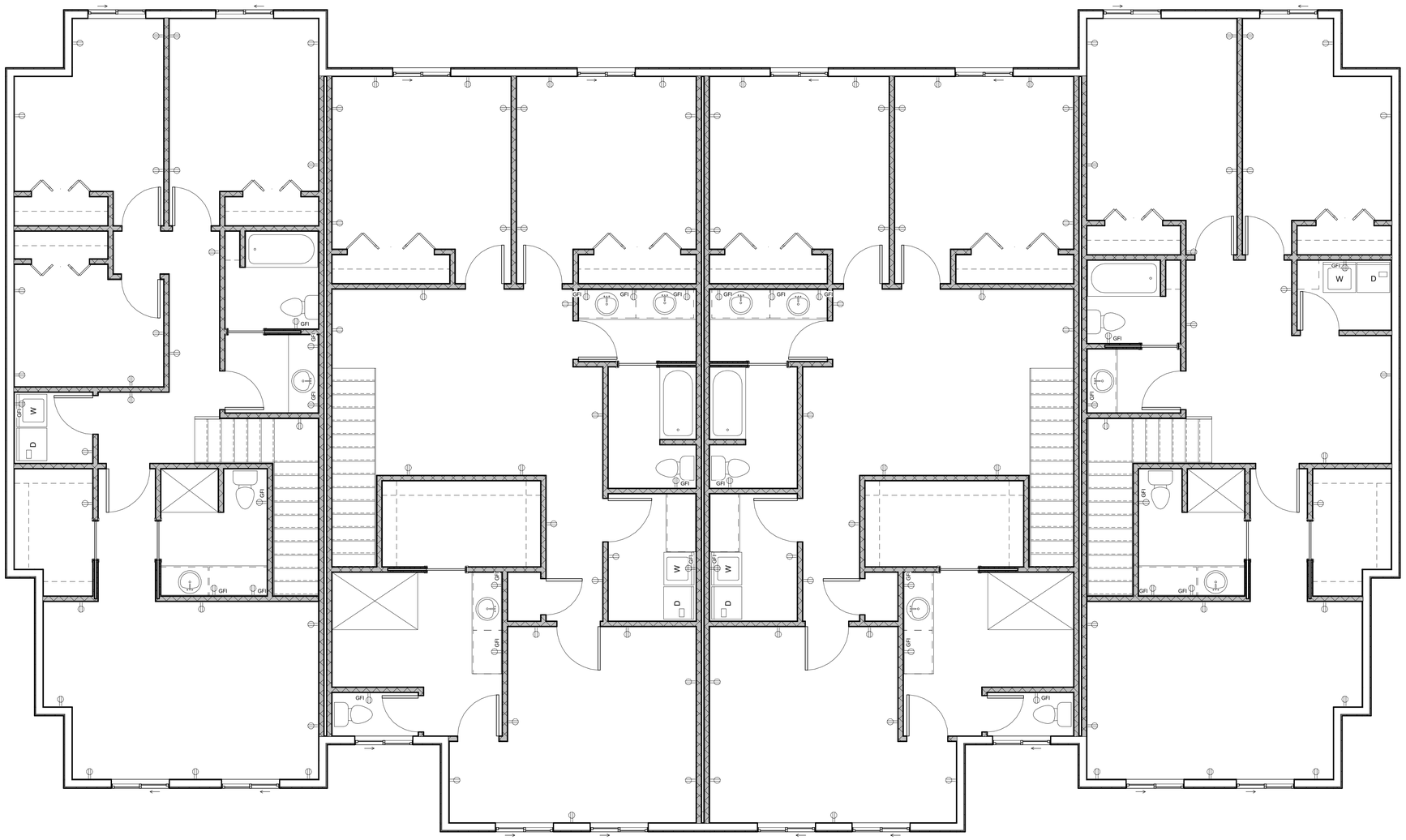

MJ DRAFTING & DESIGN

265 PHEASANTBROOK DR.
CENTERVILLE UT 84014

1/4"=1'-0"

SECOND FLOOR ELECTRICAL

SHEET

E002

STRUCTURAL DESIGN CRITERIA

RISK CATEGORY:	II
FLOOR(S):	
DEAD LOAD:	DL = 12 PSF
LIVE LOAD(S):	
RESIDENTIAL	LL = 40 PSF
ROOF:	
DEAD LOAD:	DL = 15 PSF
GROUND SNOW LOAD:	Pg = 43 PSF
FLAT ROOF SNOW LOAD:	Pf = 30 PSF
SNOW EXPOSURE FACTOR:	Ce = 1.0
SNOW IMPORTANCE FACTOR:	I = 1.0
THERMAL FACTOR:	Ct = 1.0
WIND LOAD:	
BASIC WIND SPEED:	V = 115 MPH (3 SEC GUST)
IMPORTANCE FACTOR:	I = 1.0
WIND EXPOSURE:	"B"
COMPONENT AND CLADDING PRESSURE:	P = 20 PSF
SEISMIC:	
PROCEDURE:	EQUIVALENT LATERAL FORCE
SITE CLASS:	D
IMPORTANCE FACTOR:	I = 1.0
SEISMIC DESIGN CATEGORY:	D
SPECTRAL RESPONSE ACCELERATIONS:	Ss = 1.589 S1 = 0.492
SPECTRAL RESPONSE COEF:	SDS = 1.059 SD1 = 0.492

BASIC SEISMIC-FORCE-RESISTING SYSTEM:
LIGHT FRAME WALLS WITH WOOD SHEAR PANELS
R=6, OMEGA=3, Cd=4, Cs=0.163
SEISMIC BASE SHEAR = 47.35 KIPS

SOILS:
NET ALLOWABLE SOIL PRESSURE = 1500 PSF. (ASSUMED)

GENERAL

1. ALL DETAILS, SECTIONS, AND NOTES SHOWN ON THE DRAWINGS ARE INTENDED TO BE TYPICAL AND SHALL APPLY TO SIMILAR SITUATIONS ELSEWHERE UNLESS NOTED OR SHOWN OTHERWISE. NOTES AND DETAILS ON DRAWINGS SHALL TAKE PRECEDENCE OVER THESE GENERAL NOTES. GENERAL NOTES SHALL TAKE PRECEDENCE OVER THE SPECIFICATIONS.

2. REFER TO THE SPECIFICATIONS FOR INFORMATION NOT COVERED BY THESE GENERAL NOTES OR THE STRUCTURAL DRAWINGS.

3. SEE THE ARCHITECTURAL DRAWINGS FOR DIMENSIONS, DOORS, WINDOWS, NON-BEARING INTERIOR AND EXTERIOR WALLS, ELEVATIONS, SLOPES, STAIRS, CURBS, DRAINS, RECESSES, DEPRESSIONS, RAILINGS, WATERPROOFING, FINISHES, CHAMFERS, KERFS, ETC.

4. ALL DESIGN, CONSTRUCTION, AND INSPECTION SHALL BE IN CONFORMANCE WITH THE 2018 INTERNATIONAL BUILDING CODE.

5. THE CONTRACTOR SHALL VERIFY ALL DIMENSIONS AND CONDITIONS AT THE SITE.

6. ALL OMISSIONS OR CONFLICTS BETWEEN THE VARIOUS ELEMENTS OF THE WORKING DRAWINGS AND/OR SPECIFICATIONS SHALL BE BROUGHT TO THE ATTENTION OF THE ARCHITECT AND/OR STRUCTURAL ENGINEER BEFORE PROCEEDING WITH ANY WORK INVOLVED.

7. THE STRUCTURAL DRAWINGS SHALL BE USED IN CONJUCTION WITH THE ENTIRE SET OF CONSTRUCTION DRAWINGS. THIS MEANS THAT DETAILING AND SHOP DRAWING PRODUCTION FOR STRUCTURAL ELEMENTS WILL REQUIRE INFORMATION THAT IS CONTAINED ON THE ARCHITECTURAL AND/OR OTHER CONSULTANTS' DRAWINGS. THE STRUCTURAL DRAWINGS MAY NOT SHOW ALL DIMENSIONS, SLOPES, ELEVATIONS, DEPRESSIONS, MECHANICAL HOUSEKEEPING PADS, ETC. THE CONTRACTOR SHALL VERIFY ALL DIMENSIONS THAT ARE SHOWN ON THE STRUCTURAL DRAWINGS WITH THE ARCHITECTURAL AND/OR OTHER CONSULTANTS' DRAWINGS. ANY DISCREPANCIES SHALL BE BROUGHT TO THE ATTENTION OF THE ARCHITECT AND/OR STRUCTURAL ENGINEER BEFORE PROCEEDING WITH ANY WORK INVOLVED.

8. DRAWINGS INDICATE THE FINISHED PRODUCT. THEY DO NOT INDICATE A METHOD OF CONSTRUCTION. CONTRACTOR SHALL TAKE ALL PRECAUTIONS NECESSARY TO PROTECT THE STRUCTURE DURING CONSTRUCTION. SUCH PRECAUTIONS SHALL INCLUDE, BUT NOT BE LIMITED TO, BRACING, SHORING FOR CONSTRUCTION EQUIPMENT, ETC.

9. THE CONTRACTOR SHALL BE RESPONSIBLE FOR COMPENSATING THE OWNER FOR ANY CHANGES MADE AS A RESULT OF A DEVIATION FROM THE CONTRACT DOCUMENTS, DEVIATION FROM THE SPECIFICATIONS, FAULTY MATERIALS, OR FAULTY WORKMANSHIP.

10. OPTIONS ARE FOR THE CONTRACTOR'S CONVENIENCE. THE CONTRACTOR SHALL BE RESPONSIBLE FOR COORDINATING ALL REQUIRED DESIGN CHANGES. COST ASSOCIATED WITH ANY DESIGN WORK INITIATED BY THE OPTION SHALL BE BORNE BY THE CONTRACTOR.

11. CONTRACTOR SHALL BE RESPONSIBLE FOR SAFETY AND PROTECTION WITHIN AND ADJACENT TO THE JOB SITE.

12. TEMPORARY SHORING AND BRACING SHALL BE PROVIDED WHEREVER NECESSARY TO SUPPORT ALL LOADS TO WHICH THE STRUCTURE MAY BE SUBJECTED INCLUDING WIND AND SOIL LOADS. SUCH BRACING SHALL BE LEFT IN PLACE AS LONG AS MAY BE REQUIRED FOR SAFETY OR UNTIL ALL STRUCTURAL ELEMENTS ARE COMPLETE.

13. DURING AND AFTER CONSTRUCTION THE CONTRACTOR AND/OR OWNER SHALL KEEP LOADS ON THE STRUCTURE WITHIN THE LIMITS OF THE DESIGN LOADS.

14. SIZES, LOCATIONS, AND ANCHORAGES OF EQUIPMENT SHALL BE VERIFIED IN THE FIELD WITH EQUIPMENT MANUFACTURERS (SUPPLIERS) PRIOR TO PLACING CONCRETE OR FABRICATING STEEL.

15. THERMAL OR MOISTURE PROTECTION, FURNISHINGS, DOORS, WINDOWS, EQUIPMENT, MECHANICAL, ELECTRICAL, FINISHES, SIDING, PANELING, AND VENEERS ARE NOT PART OF THE RESPONSIBILITY OF THE STRUCTURAL ENGINEER.

STRUCTURAL DEFERRED SUBMITTALS

CONTRACTOR SHALL SUBMIT DRAWINGS AND CALCULATIONS BEARING THE SEAL OF A PROFESSIONAL ENGINEER LICENSED IN THE STATE OF THE PROJECT TO ARCHITECT/ENGINEER BEFORE SUBMITTING TO JURISDICTION FOR REVIEW AND PERMITTING.

ITEMS:
1. OPEN WEB METAL JOISTS AND GIRDERS
2. CONCRETE MIX DESIGN

SHOP DRAWING SUBMITTALS

1. CONTRACTOR SHALL REVIEW AND VERIFY ALL SHOP DRAWINGS TO ENSURE THEY COMPLY WITH THE REQUIREMENTS OF THE CONTRACT DOCUMENTS. ENGINEER WILL REVIEW THE SHOP DRAWINGS FOR GENERAL CONFORMANCE WITH THE DESIGN CONCEPT. THIS REVIEW BY THE ENGINEER SHALL NOT BE CONSTRUED AS APPROVAL.

2. REFER TO THE ARCHITECTURAL DRAWINGS FOR SHOP DRAWING SUBMITTALS REQUIRED FOR NON-STRUCTURAL ELEMENTS.

SITE PREPARATION NOTES

1. ALL SURFACE VEGETATION, TOPSOIL, DEGRADABLE ORGANIC, PAST BUILDING DEBRIS, ANY OTHER DELETERIOUS MATERIALS, AND NON-COMPACTED FILL SHALL BE REMOVED FROM WITHIN THE BUILDING PAD AREA. THE STRIPPED SOILS ARE UNSUITABLE AS COMPACTED STRUCTURAL FILL.

2. THE SUBGRADE SHALL BE PROOF ROLLED. ALL SOFT SPOTS SHALL BE REMOVED AND REPLACED WITH COMPACTED STRUCTURAL FILL.

3. THE SUBGRADE SHALL BE SCARIFIED AND COMPACTED TO THE REQUIREMENTS OF STRUCTURAL FILL. IF SOFT OR LOOSE AREAS ARE ENCOUNTERED DURING THE SCARIFYING AND COMPACTION PROCESS THEY MUST BE COMPLETELY REMOVED AND REPLACED WITH STRUCTURAL FILL.

4. FOOTINGS SHALL BEAR UPON FIRM UNDISTURBED NATURAL SOILS AND/OR UPON STRUCTURAL FILL EXTENDING TO FIRM UNDISTURBED NATURAL SOILS.

5. WHERE REQUIRED, THE WIDTH OF STRUCTURAL FILL BELOW FOOTINGS SHALL BE EQUAL TO THE WIDTH OF THE FOOTINGS PLUS ONE FOOT FOR EACH FOOT OF FILL THICKNESS

6. STRUCTURAL FILL SHALL CONSIST OF WELL GRADED, GRANULAR SOILS WITH A MAXIMUM PARTICLE SIZE OF 3 INCHES, LESS 35% PASSING THE NO. 200 SIEVE. STRUCTURAL FILL SOILS SHALL BE NON-EXPANSIVE AND HAVE A LIQUID LIMIT LESS THAN 35 AND A PLASTICITY INDEX BELOW 15.

7. ALL STRUCTURAL FILL, WHERE REQUIRED, SHALL EXTEND TO SUITABLE NATURAL SOILS. STRUCTURAL FILL SHALL BE PLACED IN MAXIMUM 8 INCH LOOSE LIFTS AND COMPACTED TO AT LEAST 95% OF MAXIMUM DENSITY AS DETERMINED BY ASTM D-1557 AND SHALL BE COMPACTED AT A MOISTURE CONTENT WITHIN 2% OF THE OPTIMUM MOISTURE CONTENT.

8. SLABS ON GRADE SHALL BE UNDERLAIN BY A MINIMUM OF 4" OF FREE-DRAINING GRANULAR MATERIAL. GRANULAR MATERIAL SHALL BE PLACED UPON PROPERLY PREPARED SUBGRADE AS DESCRIBED ABOVE.

FOOTINGS

1. ALL FOOTINGS SHALL BEAR 12" MINIMUM INTO ORIGINAL UNDISTURBED EARTH OR ON ENGINEERED FILL COMPACTED TO 95% OF MAXIMUM RELATIVE DENSITY BASED ON ASTM D1557. SUCH FILL SHALL BE PLACED IN LAYERS NOT TO EXCEED 6" IN DEPTH AFTER COMPACTION AND SHALL EXTEND DOWN TO IN-SITU GRANULAR SOILS.

2. FOOTING ELEVATIONS SHOWN ON PLAN ARE TOP OF FOOTINGS AND ARE MINIMUM DEPTH. DIFFERENT OR UNUSUAL CONDITIONS SHALL BE REPORTED TO THE ARCHITECT AND/OR ENGINEER.

3. EXTERIOR WALL FOOTINGS SHALL BEAR AT A MINIMUM DEPTH OF 2'-6" BELOW FINISHED EXTERIOR GRADE.

4. NO FOOTINGS SHALL BE PLACED IN WATER OR ON FROZEN GROUND.

5. DO NOT BACK FILL BEHIND FOUNDATION WALLS UNTIL TOP AND BOTTOM SLABS HAVE BEEN POURED AND ATTAINED THEIR DESIGN STRENGTHS.

6. BACK FILL BOTH SIDES OF FOUNDATION WALLS AT SAME TIME TO PREVENT OVERTURNING.

7. WALL FOOTINGS, WHERE NOT SHOWN OTHERWISE, SHALL BE 12" THICK WITH AN 8" SPREAD EACH SIDE OF WALL AND PROVIDED WITH (1) #4 x CONTINUOUS AT BOTTOM FOR EACH 8" OF FOOTING WIDTH.

8. WHERE A PIPE PASSES THROUGH AN INTERIOR OR EXTERIOR FOUNDATION WALL, STEP THE FOOTING DOWN TO PASS BELOW PIPE AND THEN STEP BACK UP TO INDICATED ELEVATION. PROVIDE PIPE SLEEVE THROUGH FOUNDATION WALL.

REINFORCING STEEL

1. ALL REINFORCEMENT SHALL BE DETAILED AND PLACED IN ACCORDANCE WITH ACI DETAILING MANUAL 315-99 AND ACI STANDARD 318-14

2. REINFORCING STEEL SHALL BE ASTM A615 GRADE 60.

3. WELDED WIRE FABRIC SHALL CONFORM TO ASTM A185. LAP ONE MESH TIE.

4. ALL REINFORCEMENT SHALL BE SECURELY TIED AND HELD IN PLACE.

5. PROVIDE ACCESSORIES RECOMMENDED BY THE CRSI NECESSARY TO PROPERLY SUPPORT REINFORCING AT POSITIONS SHOWN ON PLANS.

6. REINFORCING BARS THAT ARE TO BE WELDED, INCLUDING DEFORMED BAR ANCHORS (DBA) SHALL COMPLY WITH ASTM A706 OR ANOTHER WELDABLE GRADE AND SHALL BE WELDED IN ACCORDANCE WITH THE AWS RECOMMENDATIONS.

7. ALL CONTINUOUS REINFORCEMENT SHALL TERMINATE WITH A 90 DEGREE TURN OR A SEPARATE CORNER BAR. ALL SPLICES SHALL HAVE A MINIMUM LAP OR EMBEDMENT PER REINFORCING SCHEDULE.

8. COVER TO MAIN REINFORCEMENT FROM ADJACENT SURFACES SHALL BE AS FOLLOWS UNLESS SHOWN OTHERWISE:
   A. UNFORMED SURFACES IN CONTACT WITH GROUND OR EXPOSED TO THE WEATHER (BOTTOM OF FOOTINGS).3"
   B. SLABS ON GRADE..... 2"
   C. FORMED SURFACES IN CONTACT WITH THE GROUND OR EXPOSED TO THE WEATHER (GRADE BMS, WALLS, ETC), BEAMS AND COLUMNS..... 2"
   D. STRUCTURAL SLABS AND JOISTS NOT EXPOSED TO WEATHER OR EARTH..... 1"
   E. INTERIOR WALL SURFACES..... 1"
   F. INTERIOR BEAMS AND COLUMNS..... 1-1/2"
   G. IN ALL CASES MINIMUM COVER SHALL NOT BE LESS THAN THE DIAMETER OF ADJACENT BARS.

9. PRIOR TO FABRICATION AND PLACEMENT, SHOP DRAWINGS FOR ALL REINFORCING STEEL SHALL BE REVIEWED BY THE STRUCTURAL ENGINEER.

CONCRETE

1. CONCRETE SHALL ATTAIN THE FOLLOWING MINIMUM COMPRESSIVE STRENGTHS AT 28 DAYS:
   FOOTINGS ..... 3000 PSI
   FOUNDATION WALLS ..... 3000 PSI
   GARAGE SLABS ON GRADE ..... 4000 PSI
   INTERIOR SLABS ON GRADE ..... 4000 PSI
   EXTERIOR FLAT WORK ..... 5000 PSI

2. THE VARIOUS CONCRETE ITEMS ARE ASSIGNED TO THE FOLLOWING EXPOSURE CATEGORIES AND CLASSES PER SECTION 4.2 OF ACI 318-14:
   FOOTINGS F1, S0, P0, C1
   FOUNDATION WALLS F1, S0, P0, C1
   GARAGE SLABS ON GRADE..... F1, S0, P0, C1
   INTERIOR SLABS ON GRADE F0, S0, P0, C1
   EXTERIOR FLAT WORK F1, S0, P0, C2

   SEE TABLE 4.2.1 OF ACI 318-14 FOR EXPLANATIONS OF CATEGORIES AND CLASSES LISTED ABOVE.

3. A STATEMENT OF MIX DESIGN FOR ALL CONCRETE SHALL BE SUBMITTED TO AND REVIEWED BY THE STRUCTURAL ENGINEER PRIOR TO COMMENCING WORK. ALL MIX DESIGNS SHALL INCORPORATE REQUIREMENTS AND RESTRICTIONS FOUND IN TABLES 4.3.1, 4.4.1, 4.4.2, AND 4.5.1 OF ACI 318-14. IF TWO OR MORE REQUIREMENTS ARE IN CONFLICT, THE MORE RESTRICTIVE REQUIREMENT SHALL BE FOLLOWED.

4. ALL CONCRETE WORK SHALL BE PLACED, CURED, STRIPPED, AND PROTECTED AS DIRECTED BY THE SPECIFICATIONS AND ACI STANDARDS AND PRACTICES.

5. UNLESS NOTED OTHERWISE ON THE DRAWINGS, REINFORCE CONCRETE WALLS AS FOLLOWS:

WIDTH	HORIZ REINF	VERT REINF
6" WALL	#4 @ 15"	#4 @ 18" CENTER OF WALL
8" WALL	#4 @ 18"	#4 @ 18" CENTER OF WALL
10" WALL	#4 @ 14"	#4 @ 14" CENTER OF WALL
12" WALL	#4 @ 12", EACH FACE	#4 @ 12", EACH FACE

6. DOWEL VERTICAL BARS 36 DIAMETERS INTO STRUCTURE ABOVE AND FOOTINGS BELOW. PROVIDE 90 DEGREE HOOK WHERE 36 DIAMETER IS NOT POSSIBLE. IN ADDITION, PROVIDE (2) #4 CONTINUOUS BARS TOP AND BOTTOM OF 6" AND 8" WALLS AND (2) #5 BARS TOP AND BOTTOM OF WALLS 10" OR THICKER.

7. BEFORE CONCRETE IS POURED CHECK WITH ALL TRADES TO ENSURE PROPER PLACEMENT OF ALL OPENINGS, SLEEVES, CURBS, CONDUITS, BOLTS, INSERTS, ETC. RELATIVE TO WORK. NO ALUMINUM CONDUIT NOR PRODUCT CONTAINING ALUMINUM NOR ANY OTHER MATERIAL INJURIOUS TO CONCRETE SHALL BE EMBEDDED IN CONCRETE.

8. PLACE (2) #5 BARS MINIMUM AROUND ALL OPENINGS IN CONCRETE (UNLESS OTHERWISE SHOWN OR NOTED) AND PROJECT 24" BEYOND CORNER OF OPENING.

9. WHERE OPENINGS LARGER THAN 16" IN ANY DIRECTION OCCUR IN WALLS OR SLABS, PROVIDE SAME SIZE ADDITIONAL, FULL LENGTH REINFORCING AT EACH SIDE OF OPENING EQUAL TO 1/2 THE NUMBER OF BARS INTERRUPTED BY THE OPENING. SPACE ADDITIONAL BARS AT 4 x BAR DIAMETER.

10. CONSTRUCTION JOINTS AND CONTROL JOINTS:
    A. PROVIDE A CONTINUOUS TOOL-ROUGHENED SURFACE AT TOP OF ALL WALL FOOTINGS, UNLESS NOTED OTHERWISE.
    B. CONTROL JOINTS SHALL BE COMPLETE WITHIN 12 HOURS OF CONCRETE PLACEMENT.

11. PROVIDE A #3 NOSING BAR IN ALL STAIR TREADS.

12. WHERE EXTERIOR SLABS ON GRADE ABUT WALLS OR COLUMNS PROVIDE 3/8" PRE-FORMED EXPANSION JOINT WITH SEALANT.

13. ADMIXTURES:
    A. AIR-ENTRAINING ADMIXTURES (WHEN USED), SHALL COMPLY WITH ASTM C260.
    B. CALCIUM CHLORIDE SHALL NOT BE ADDED TO CONCRETE MIX.

STRUCTURAL STEEL

1. ALL STRUCTURAL STEEL AND STRUCTURAL STEEL WORK SHALL COMPLY WITH BOTH THE AISC "MANUAL OF STEEL CONSTRUCTION" CONTAINING THE SPECIFICATIONS FOR THE DESIGN, FABRICATION AND ERECTION OF STRUCTURAL STEEL BUILDINGS, INCLUDING THE "CODE OF STANDARD PRACTICES" (LATEST EDITION), AND WITH THE IBC 2018 EDITION.

2. ALL WIDE FLANGE STRUCTURAL STEEL SHALL BE ASTM A992 AND ALL MISCELLANEOUS SHAPES SHALL BE ASTM A36, UNLESS NOTED OTHERWISE.

3. STRUCTURAL STEEL TUBING SHALL CONFORM TO ASTM A500 GRADE B; YIELD STRESS = 46 KSI.

4. USE A325 BOLTS FOR STEEL TO STEEL CONNECTIONS, F1554 GR36 FOR ANCHOR BOLTS, AND A307 BOLTS FOR ALL OTHER CONNECTIONS (UNLESS SPECIFIED OTHERWISE ON DRAWINGS). USE 3/4" DIAMETER MINIMUM.

5. PRIOR TO FABRICATION AND ERECTION, SHOP DRAWINGS FOR ALL STEEL ITEMS SHALL BE REVIEWED BY THE STRUCTURAL ENGINEER. THE CONTRACTOR SHALL VERIFY ALL SHOP DRAWING DIMENSIONS WITH STRUCTURAL AND ARCHITECTURAL PLANS AND DETAILS.

6. ALL WELDS SHALL BE MADE WITH E70XX ELECTRODES AND BY WELDERS CERTIFIED BY AWS STANDARDS WITHIN THE PAST 12 MONTHS; PROVIDE WRITTEN CERTIFICATION IF REQUESTED. ALL WELDS SHALL HAVE A MINIMUM CHARPY V-NOTCH TOUGHNESS OF 20 FOOT-POUND (27.1N-m) AT 0° F UNLESS NOTED OTHERWISE ON THE PLANS.

7. ALL BEAM CONNECTIONS, NOT SHOWN TO BE MOMENT CONNECTIONS AND NOT DETAILED OTHERWISE SHALL BE MADE USING AISC 360-05 STEEL CONSTRUCTION MANUAL (14TH EDITION) TABLE 10-9 10 "SINGLE PLATE CONNECTIONS" WITH THE MAXIMUM NUMBER OF ROWS SHOWN FOR THAT BEAM.

8. UNLESS NOTED OTHERWISE, BEAMS SUPPORTING FLOOR SYSTEMS SHALL BE CAMBERED 1/4 INCH PER 10 FEET OF SPAN.

WOOD FRAMING

1. REFER TO STRUCTURAL DRAWINGS AND SPECIFICATIONS FOR DETAILS, ADDITIONAL NOTES AND SCHEDULES PERTAINING TO PLYWOOD ROOF, FLOOR, AND SHEAR WALL DIAPHRAGMS.

2. STRUCTURAL FRAMING LUMBER SHALL BE CLEARLY MARKED AND MEET THE FOLLOWING MINIMUM GRADES AS DEFINED BY THE 2012 EDITION OF THE NATIONAL DESIGN SPECIFICATION FOR WOOD CONSTRUCTION:
   A. 2" TO 4" THICK,
      5" AND WIDER: DOUGLAS FIR-LARCH (SOUTH) GRADE NO.2
   B. BEARING WALL STUDS: DOUGLAS FIR-LARCH (SOUTH)
      UP TO 8' LENGTH: STUD GRADE OR BETTER
      OVER 8' LENGTH: NO. 2 OR BETTER
      POSTS AND TIMBERS: DOUGLAS FIR-LARCH (SOUTH) GRADE NO. 1
   C. SILL PLATES IN CONTACT WITH CONCRETE: FOUNDATION GRADE REDWOOD OR PRESSURE TREATED DOUGLAS FIR-LARCH (SOUTH) GRADE NO. 1

3. ALL ROOF AND FLOOR JOISTS SHALL BE SUPPORTED LATERALLY AT THE ENDS AND AT EACH SUPPORT BY SOLID BLOCKING 2" THICK AND THE FULL DEPTH OF THE JOIST, EXCEPT WHERE THE END OF THE JOIST IS ATTACHED TO A HEADER OR BOND BEAM WITH METAL ANCHORS OR HANGERS. PROVIDE APPROVED BRIDGING AT A MAXIMUM OF 8'-0" OC BETWEEN SUPPORTS.

4. BUILT-UP BEAMS OF 2x MEMBERS SHALL BE SPIKED TOGETHER WITH 16d SPIKES AT 12" OC, STAGGERED. USE (2) 20d COMMON NAILS AT ALL SUPPORTS.

5. ALL WOOD BEAMS AND HEADERS SHALL BEAR ON MINIMUM OF TWO CRIPPLE STUDS AT EACH END UNLESS SHOWN OTHERWISE.

6. ALL WOOD POSTS AND BUILT-UP COLUMNS SHALL RUN CONTINUOUS.

7. BUILT-UP COLUMNS SHALL BE SPIKED TOGETHER WITH 16d SPIKES AT 12" OC.

8. PROVIDE DOUBLE JOISTS BENEATH ALL WALLS RUNNING PARALLEL TO JOISTS.

9. ALL NAILS SPECIFIED ON DETAILS OR SCHEDULED SHALL BE COMMON NAILS UNLESS NOTED OTHERWISE.

10. HOLES FOR NAILS, WHERE NECESSARY TO PREVENT SPLITTING, SHALL BE BORED OF A DIAMETER SMALLER THAN THAT OF THE NAILS.

11. ALL JOISTS AND BEAM HANGERS, FRAMING ANCHORS, STRAP TIES, AND OTHER METAL FASTENERS FOR WOOD FRAMING SHALL BE SIMPSON BRAND (OR EQUIVALENT).

12. UNLESS NOTED OTHERWISE, ANCHOR ALL TRUSSES, RAFTERS AND JOISTS TO SUPPORTS WITH GALVANIZED FRAMING ANCHORS.

13. UNLESS NOTED OTHERWISE, PROVIDE 2x CONTINUOUS BLOCKING BETWEEN MAIN MEMBERS AT ALL RIDGES, HIPS AND VALLEYS.

14. CUTTING AND NOTCHING OF STUDS. IN EXTERIOR WALLS AND BEARING PARTITIONS, ANY WOOD STUD IS PERMITTED TO BE CUT OR NOTCHED TO A DEPTH NOT EXCEEDING 25% OF ITS WIDTH. CUTTING OR NOTCHING OF STUDS TO A DEPTH NOT GREATER THAN 40% OF THE WIDTH IS PERMITTED IN NONBEARING PARTITIONS SUPPORTING NO LOADS OTHER THAN THE WEIGHT OF THE PARTITION.

15. BORED HOLES IN STUDS. A HOLE NOT GREATER IN DIAMETER THAN 40% OF THE STUD WIDTH IS PERMITTED TO BE BORED IN ANY WOOD STUD. BORED HOLES NOT GREATER THAN 60% OF THE WIDTH OF THE STUD ARE PERMITTED IN NONBEARING PARTITIONS OR IN ANY WALL WHERE EACH BORED STUD IS DOUBLED, PROVIDED NOT MORE THAN TWO SUCH SUCCESSIVE DOUBLED STUDS ARE SO BORED.

16. IN NO CASE SHALL THE EDGE OF THE BORED HOLE BE NEARER THAN 5/8" TO THE EDGE OF THE STUD.

17. NAILS AND STAPLES SHALL COMPLY WITH THE REQUIREMENTS OF ASTM F 1667.

18. DOUBLE TOP AND BOTTOM PLATES TO BE LAPPED 4'-0" AT SPLICES AND SPIKED TOGETHER WITH 16d COMMON NAILS @ 3" OC, STAGGERED.

19. BEARING WALLS, EXTERIOR WALLS, AND SHEAR WALLS SHALL BE INSTALLED AS FOLLOWS (MINIMUM):

STUD HEIGHT	WALL CONSTRUCTION
<10'	2x6 STUDS @ 16" OC
10' - 14'	2x6 STUDS @ 12" OC
14' - 18'	2x6 STUDS @ 8" OC
18' - 20'	2x6 STUDS @ 6" OC

20. MAXIMUM HEIGHT OF NON-BEARING STUD WALLS SHALL BE 14' FOR 2x4 STUDS AND 20' FOR 2x6 STUDS.

DEBIRK ENGINEERING

265 Pheasantbrook Drive Townhouses
Centerville, Utah
General Notes

No.	Revision/Issue	Date

Stamp
PROFESSIONAL ENGINEER
11/18/22
No. 9019902-2202
W ALEXANDER DeBIRK
STATE OF UTAH

Project: PHEASANTBROOK
Date: OCTOBER 2022
Scale: 3/16" = 1' - 0" UNO
Sheet: S0

STRUCTURAL DESIGN CRITERIA (CONTINUED)

21. SUBSTITUTIONS OF STRUCTURAL WOOD FRAMING MEMBERS FROM THOSE SHOWN ON THE STRUCTURAL DRAWINGS WILL NOT BE ACCEPTED WITHOUT PRIOR WRITTEN APPROVAL FROM THE STRUCTURAL ENGINEER.

22. ALL FASTENERS AND CONNECTORS THAT WILL BE IN CONTACT WITH PRESERVATIVE-TREATED WOOD SHALL ADHERE TO THE REQUIREMENTS IN SECTION 2304.9.5 OF THE 2018 IBC.

MANUFACTURED TIMBER PRODUCTS

GLUE-LAMINATED BEAMS (GLB):
UNLESS NOTED OTHERWISE, ALL GLUE-LAMINATED BEAMS SHALL BE OF DOUGLAS FIR (NORTH) AND HAVE THE FOLLOWING PROPERTIES:

MIN ALLOWABLE BENDING STRESS	Fb = 2400 PSI
MIN ALLOWABLE SHEAR STRESS	Fv = 265 PSI
MODULUS OF ELASTICITY	E = 1,800,000 PSI

UNLESS NOTED OTHERWISE ON THE DRAWINGS, ALL GLUE-LAMINATED BEAMS SHALL HAVE A POSITIVE CAMBER OF AN 1800' RADIUS.

EXPOSED GLUE-LAMINATED BEAMS SHALL BE OF ARCHITECTURAL GRADE.

LAMINATED VENEER LUMBER (LVL):
UNLESS NOTED OTHERWISE, LVL BEAMS SHALL HAVE THE FOLLOWING PROPERTIES:

MIN ALLOWABLE BENDING STRESS	Fb = 2600 PSI x (12/d)^0.136
MIN ALLOWABLE SHEAR STRESS	Fv = 285 PSI
MODULUS OF ELASTICITY	E = 1,900,000 PSI

PLYWOOD DIAPHRAGMS

UNLESS NOTED OTHERWISE ON THE DRAWINGS SHEATH AND NAIL ALL DIAPHRAGMS AS FOLLOWS:

WALL SHEATHING (SHEAR WALLS):
TYPE: 1/2" APA RATED EXPOSURE 1 (32/16) OR OSB EQUIVALENT.
NAILING: 8d COMMON NAILS @ 4" OC TO ALL PLYWOOD PANEL EDGES, TOP AND BOTTOM WALL PLATES, END ELEMENTS, AND POSTS AT HOLD-DOWN ANCHORS.
8d @ 12" OC TO ALL INTERMEDIATE SUPPORTS.
BLOCKING: 2x THICKNESS OF WALL BLOCKING AT ALL UNSUPPORTED PANEL EDGES.

FLOOR SHEATHING:
TYPE: 3/4" APA RATED EXPOSURE 1 TONGUE AND GROOVE SHEATHING (48/24).
NAILING: GLUE AND NAIL WITH 10d GALVANIZED COMMON NAILS @ 4" OC TO ALL SUPPORTED PLYWOOD PANEL EDGES; TO BLOCKING OVER SHEAR WALLS, USE 10d COMMON NAILS @ 12" OC AND GLUE TO ALL INTERMEDIATE SUPPORTS.
BLOCKING: NOT REQUIRED.
LAYOUT: FACE GRAIN PERPENDICULAR TO SUPPORTS.

ROOF SHEATHING:
TYPE: 5/8" APA RATED EXPOSURE 1 (40/20) OR OSB EQUIVALENT.
NAILING: 10d COMMON NAILS @ 6" OC TO ALL PLYWOOD PANEL EDGES, BEAMS, BLOCKING OVER SHEAR WALLS, AND DIAPHRAGM BOUNDARIES.
10d @ 12" OC TO ALL INTERMEDIATE SUPPORTS
BLOCKING: NOT REQUIRED. 2x MIN AT ALL JOINTS.
LAYOUT: FACE GRAIN PERPENDICULAR TO SUPPORTS.

PLYWOOD DIAPHRAGM FASTENERS

1. SUBSTITUTION OF FASTENERS OTHER THAN THOSE SPECIFIED IN THE STRUCTURAL NOTES OR THE PLYWOOD DIAPHRAGM SCHEDULE IS NOT ALLOWED EXCEPT FOR THE FOLLOWING:

SPECIFIED FASTENER	SUBSTITUTE
8d COMMON NAIL	14 GAGE x 2" STAPLE

2. ALL STAPLES MUST HAVE 7/16" CROWN WIDTH.

3. NAILS SHALL BE PLACED NOT LESS THAN 3/8" FROM THE EDGE OF PLYWOOD PANELS. STAGGER NAILS EACH SIDE OF PANEL EDGE.

4. WHERE PLYWOOD IS APPLIED BOTH SIDES OF SHEAR WALLS STAGGER PANEL EDGES EACH SIDE ON ADJACENT STUDS.

5. AT ROOF AND FLOOR DIAPHRAGMS, APPLY NAILS AT PANEL EDGE SPACING TO ALL DRAG STRUTS, TENSION CHORDS, BLOCKING OVER BEARING AND SHEAR WALLS, AND ANY OTHER SPECIAL DIAPHRAGM MEMBERS NOTED ON PLANS.

6. AT PLYWOOD SHEAR WALLS, APPLY NAILS AT PANEL EDGE SPACING TO TOP AND BOTTOM PLATES, END POSTS, ALL VERTICAL ELEMENTS AT HOLD DOWN ANCHORS, AND HORIZONTAL BLOCKING.

7. ALL PANEL EDGES OF PLYWOOD SHEAR WALLS MUST BE BLOCKED.

METAL PLATED ROOF TRUSS NOTES

1. METAL PLATE CONNECTED WOOD TRUSSES SHALL BE MANUFACTERED AS REQUIRED BY ANSI/TPI 1. MANUFACTURER OF TRUSSES USING METAL PLATE CONNECTORS SHALL RETAIN AN APPROVED AGENCY TO MAKE NONSCHEDULED INSPECTIONS OF TRUSS MANUFACTURING AND DELIVERY OPERATIONS. THE INSPECTION SHALL COVER ALL PHASES OF TRUSS OPERATIONS, INCLUDING LUMBER STORAGE, HANDLING, CUTTING FIXTURES, PRESSES OR ROLLERS, MANUFACTURING, BUNDLING AND BANDING.

2. IT SHALL BE THE TRUSS FABRICATOR'S RESPONSIBILITY TO DETERMINE THE SIZE AND GRADE LUMBER REQUIRED FOR EACH TRUSS MEMBER. WHERE MEMBER SIZE IS INDICATED ON THE DRAWINGS THE FABRICATOR SHALL DETERMINE THE REQUIRED GRADE LUMBER. GRADES AND SIZES INDICATED ON DRAWINGS ARE MINIMUMS ONLY. INTERNAL TRUSS CONFIGURATION MAY BE CHANGED TO CONFORM TO MANUFACTURER'S STANDARD PRACTICE IF APPROVED BY THE ARCHITECT/ENGINEER.

3. PRIOR TO FABRICATION, THE TRUSS FABRICATOR SHALL PROVIDE DESIGN CALCULATIONS FOR EACH TRUSS TO THE STRUCTURAL ENGINEER FOR REVIEW. CALCULATIONS SHALL INCLUDE MEMBER LOADS, FORCES AND CRITICAL STRESSES, AND MID-SPAN DEFLECTIONS. CALCULATIONS AND DRAWINGS SHALL ALSO INDICATE TYPE AND LOCATION OF BRACING REQUIRED BOTH DURING CONSTRUCTION AND PERMANENTLY. CALCULATIONS SHALL BEAR THE STAMP OF A LICENSED PROFESSIONAL ENGINEER IN THE STATE WHERE THE PROJECT IS TO BE CONSTRUCTED.

4. MOMENT COEFFICIENTS USED IN THE TRUSS DESIGN SHALL BE 1/8 FOR ONE AND TWO SPAN CONDITIONS AND 1/10 FOR THREE OR MORE SPANS. THE EFFECTIVE LENGTH FACTOR USED FOR WEBS SHALL BE 1.0.

5. TOOTHED METAL PLATES AT CONNECTOR JOINTS SHALL BE DESIGNED FOR THE FULL-MEMBER DESIGN LOADS WITHOUT CONSIDERING WOOD TO WOOD BEARING. A STRESS INCREASE FOR THE VALUE OF A CONNECTOR WILL NOT BE ALLOWED IN ANY CIRCUMSTANCE. NET AREA OF METAL GUSSET PLATES SHALL BE LARGER BY 25% THAN THAT REQUIRED BY CALCULATED STRESSES. INCREASED PLATE SIZE SHALL BE MADE BY INCREASING THE PLATE DIMENSION IN EACH DIRECTION. THE AREA UNDERNEATH THE GUSSET PLATE FOR A DISTANCE OF 1/2" ON EITHER SIDE OF A JOINT CANNOT BE COUNTED AS EFFECTIVE PLATE AREA. THE CONNECTORS SHALL BE BALANCED ON THE JOINT AS STRESSES REQUIRE AND DIMENSIONED AS TO THEIR LOCATION. ONLY ONE CONNECTION PER JOINT PER SIDE WILL BE ALLOWED. CONNECTORS SHALL MEET OR EXCEED THE SPECIFICATIONS OF THE TRUSS PLATE INSTITUTE.

6. MINIMUM SIZE OF ANY CONNECTOR SHALL BE 15 SQ IN.

7. MINIMUM BITE OF ANY GUSSET PLATE ON A TRUSSED MEMBER SHALL BE 2-1/2".

8. SPLICES IN TOP AND BOTTOM CHORDS SHALL OCCUR AT A JOINT OR WITHIN ONE-QUARTER OF THE SPAN OF A PANEL OF THE TRUSS. EACH SECTION OF THE CHORD MEMBER SHALL BE INVOLVED IN TWO JOINTS PRIOR TO BEING SPLICED.

9. THE FOLLOWING DESIGN CRITERIA SHALL BE USED:
TOP CHORD LIVE LOAD = 30.0 PSF DURATION FACTOR = 1.15
TOP CHORD DEAD LOAD = 12.0 PSF
BOT CHORD DEAD LOAD = 8.0 PSF
BOT CHORD LIVE LOAD =(10.0) PSF WITHOUT TOP CHORD LIVE LOAD
TOTAL = 50.0 PSF

10. ALL BRACING OF TRUSS MEMBERS, REQUIRED BY THE MANUFACTURER'S DESIGN, SHALL BE PROVIDED AND INSTALLED AT THE INDICATED LOCATIONS BY THE CONTRACTOR. THIS BRACING SHALL BE IN ADDITION TO ANY BRACING SHOWN OR NOTED ON THE DRAWINGS.

11. ALL CONTINUOUS LATERAL BRACING SHALL BE LATERALLY SUPPORTED AT EACH END BY ANCHORING BRACING MEMBER TO END WALLS OR BY PROVIDING A DIAGONAL BRACE AT EACH END OF BRACING MEMBER AND AT 20' INTERVALS.

12. PROVIDE A 2x4 CONTINUOUS LATERAL BRACE ALONG THE BOTTOM CHORD OF ALL TRUSSES. SPACE BRACES A MAXIMUM OF 12'-0" OC.

13. PROVIDE CAMBER ON ALL TRUSSES.

14. UNLESS NOTED OTHERWISE, ATTACH TRUSS TO ALL POINTS OF BEARING WITH ONE SIMPSON A35N (GALVANIZED) FRAMING ANCHOR OR EQUIVALENT.

15. WHERE PREFABRICATED TRUSSES, HIPS OR JACKS FRAME INTO A PREFABRICATED GIRDER TRUSS OR OTHER FRAMING MEMBER SHOWN ON PLAN THE SUPPORTING CONNECTION SHALL BE DESIGNED AND SPECIFIED BY THE TRUSS MANUFACTURER. THE SPECIFIED HANGERS AND FRAMING ANCHORS SHALL BE PROVIDED BY THE CONTRACTOR.

16. UNLESS NOTED OTHERWISE, PROVIDE SOLID 2x BLOCKING OR PREFABRICATED TRUSS BLOCKING BETWEEN TRUSSES AT ALL END BEARING CONDITIONS AND OVER ALL SHEAR WALLS.

17. ALL METAL PLATES SHALL BE GALVANIZED STEEL AND SHALL BE ON BOTH SIDES OF EACH CONNECTION. SUBMIT A COPY OF THE ICC-ES APPROVAL, INCLUDING ALLOWABLE STRESSES ESTABLISHED BY THIS COMMITTEE, FOR METAL PLATES USED.

18. ALL LUMBER SHALL BE DOUGLAS FIR OR YELLOW PINE #1 GRADE. MOISTURE CONTENT SHALL NOT EXCEED 19% NOR SHALL BE LESS THAN 7%. HANDLING, STORAGE, AND INSTALLATION OF ALL TRUSSES SHALL BE DONE SUCH THAT THE SPECIFIED MINIMUM AND MAXIMUM MOISTURE CONTENT LIMITS ARE NOT EXCEEDED. GRADE STAMPS SHALL APPEAR ON ALL MEMBERS.

19. FABRICATOR SHALL PERIODICALLY INSPECT INSTALLATION OF TRUSSES AND SHALL CERTIFY IN WRITING THAT TRUSSES AND BRACING AND BRIDGING HAVE BEEN INSTALLED ACCORDING TO THEIR SPECIFICATIONS.

MASONRY VENEER ANCHORAGE

1. BRICK VENEER SHALL BE ANCHORED TO THE STRUCTURAL WALL BY ONE OF THE FOLLOWING ANCHORS:

A. CORRUGATED SHEET METAL ANCHORS SHALL BE AT LEAST 7/8" WIDE, HAVE A BASE METAL THICKNESS OF AT LEAST 0.03", AND SHALL HAVE CORRUGATIONS WITH A WAVELENGTH OF 0.3" TO 0.5" AND AN AMPLITUDE OF 0.06" TO 0.10".

B. SHEET METAL ANCHORS SHALL BE AT LEAST 7/8" WIDE, HAVE A BASE METAL THICKNESS OF AT LEAST 0.06" AND SHALL HAVE CORRUGATIONS OF CORRUGATED SHEET METAL ANCHORS OR BE BENT, NOTCHED, OR PUNCHED TO PROVIDE EQUIVALENT PERFORMANCE IN PULL-OUT AND PUSH-THROUGH.

C. WIRE ANCHORS SHALL BE AT LEAST WIRE SIZE W1.7 AND HAVE ENDS BENT TO FORM AN EXTENSION FROM THE BEND AT LEAST 2" LONG.

D. ADJUSTABLE ANCHORS SHALL CONSIST OF SHEET METAL ANCHORS AND/OR WIRE COMPONENTS AS LISTED ABOVE AND SHALL HAVE A MAXIMUM OF 1/16" CLEARANCE BETWEEN CONNECTED PARTS, DETAILED TO PREVENT DISENGAGEMENT, AND WHERE PINTLE ANCHORS ARE USED THE LEGS SHALL HAVE A MINIMUM WIRE SIZE OF W2.8 WITH NO MORE THAN A 1-1/4" OFFSET.

2. EMBED ANCHORS IN THE MORTAR JOINT OR GROUT AND EXTEND INTO THE VENEER A MINIMUM OF 1.5", WITH AT LEAST 5/8" MORTAR COVER TO THE OUTSIDE FACE.

3. SPACE ANCHORS AS FOLLOWS: PROVIDE AT LEAST ONE CORRUGATED ANCHOR, WIRE, OR ADJUSTABLE TWO-PIECE FOR EACH 2 SQ FT OF VENEER AND FOR OTHER ANCHORS PROVIDE ONE ANCHOR FOR EACH 2.63 SQ FT. SPACE ANCHORS AT A MAXIMUM OF 32" OC HORIZONTALLY AND 18" OC VERTICALLY. PROVIDE ADDITIONAL ANCHORS AROUND ALL OPENINGS LARGER THAN 16". SPACE ANCHORS AROUND PERIMETER OF OPENING AT A MAXIMUM OF 36" OC. PLACE ANCHORS WITHIN 12" OF OPENINGS.

4. PROVIDE CONTINUOUS SINGLE-WIRE HORIZONTAL JOINT REINFORCEMENT OF W1.7 WIRE (MINIMUM) AT 18" ON CENTER MAXIMUM. PROVIDE WIRE REINFORCING AT EACH ANCHOR BED JOINT.

5. MORTAR BED JOINT THICKNESS SHALL BE AT LEAST TWICE THE THICKNESS OF THE EMBEDDED ANCHOR.

6. ALL VENEER TIES AND JOINT REINFORCEMENT MUST BE HOT DIPPED.

7. ATTACH EACH ANCHOR TO WOOD FRAMING WITH A CORROSION-RESISTANT 8d COMMON NAIL OR ALTERNATE FASTENER WITH EQUIVALENT OR GREATER PULLOUT STRENGTH. FOR CORRUGATED SHEET METAL ANCHORS, LOCATE THE NAIL OR FASTENER WITHIN 1/2" OF THE 90 DEGREE BEND IN THE ANCHOR. MAINTAIN A MAXIMUM DISTANCE BETWEEN THE INSIDE FACE OF THE VENEER AND THE OUTSIDE FACE OF THE SOLID SHEATHING OF 1" WHEN CORRUGATED ANCHORS ARE USED. MAINTAIN A MAXIMUM DISTANCE BETWEEN THE INSIDE FACE OF THE VENEER AND THE WOOD STUD OR WOOD FRAMING OF 4.5" WHEN OTHER ANCHORS ARE USED. MAINTAIN A 1" MINIMUM AIR SPACE.

8. ATTACH EACH ANCHOR TO STEEL FRAMING WITH DUROWAL D/45213 WITH (2) D/A807 SCREWS TO METAL STUDS AT 16" OC EACH WAY. PINTLE SECTION SHALL BE AS NOTED ABOVE. DUROWAL D/A213 SEISMIC PINTLE MAY BE SUBSTITUTED FOR THE WIRE PINTLE AT THE CONTRACTOR'S OPTION.

9. ATTACH EACH ANCHOR TO MASONRY BACKUP WITH LADUR-EYE ADJUSTABLE WALL TIE ASSEMBLY BY DUROWAL WITH 9 GA LADUR TYPE JOINT REINFORCEMENT IN MORTAR JOINT OF CMU AND A DA213 PINTLE SECTION WITH DURO-CLIP IN BRICK MORTAR JOINT SPACED 16" OC HORIZONTALLY.

10. ATTACH EACH ANCHOR TO CONCRETE BACKUP WITH DUROWAL D/A5213 WITH 1/4" EXPANSION BOLT SPACED 16" OC EACH WAY, PINTLE SECTION SHALL BE AS NOTED ABOVE.

DEBIRK ENGINEERING

265 Pheasantbrook Drive Townhouses
Centerville, Utah
General Notes Continued

No.	Revision/Issue	Date

Stamp
PROFESSIONAL ENGINEER
11/18/22
No. 9019902-2202
W ALEXANDER DeBIRK
STATE OF UTAH

Project PHEASANTBROOK	Sheet S1
Date OCTOBER 2022	
Scale 3/16" = 1' - 0" UNO	

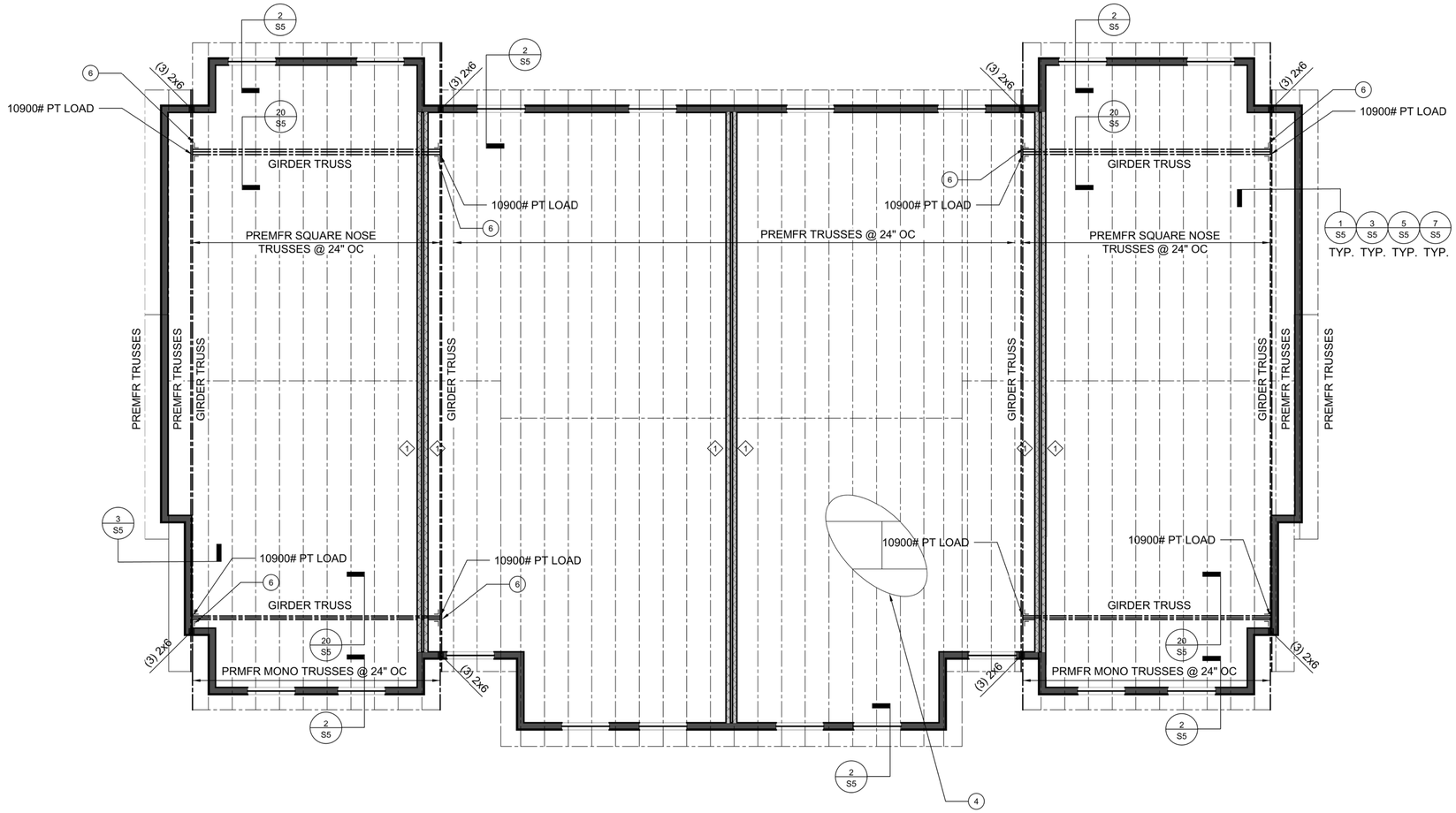

B ROOF FRAMING PLAN

SCALE: 3/16" = 1' - 0"

NOTES:
NUMBERS BUBBLED WITH A ◯ ARE KEYED ON THE DRAWING.

1. ALL HEADERS & BEAMS SHALL BE MIN (2) 2 X 8, UNO.
2. ALL BEAMS SHALL BEAR ON A MINIMUM OF (2) 2X STUDS, UNO.
3. ALL NEW EXTERIOR WALLS SHALL BE 2X6 STUDS SPACED AS PER GENERAL NOTES. ALL NEW INTERIOR STUD WALLS SHALL BE 2X4 STUDS SPACED AS PER GENERAL NOTES.
4. SHEATHE ROOF WITH 5/8" APA-RATED EXPOSURE I SHEATHING. NAIL W/ 8d GALVANIZED COMMON NAILS @ 6" O.C. TO ALL SUPPORTED PLYWOOD PANEL EDGES. FACE GRAIN PERPENDICULAR TO SUPPORTS AS SHOWN.
5. ALL NEW EXTERIOR WALLS SHALL BE TYPE ◇1 SHEAR WALLS, UNO, SEE SHEAR WALL SCHEDULE, A1/S4.

SHEAR WALL SCHEDULE

MARK	MATERIAL	8d NAILS		PLATE NAILING / BOLTING	SHEAR TRANSFER	REMARKS
		EDGE	FIELD			
◇1	½ " SHEATHING	6"	12"	(3) 16d NAILS @ 16" O.C. $\frac{5}{8}$" Ø AB @ 32"O.C.	(1) A35 @ 24" O.C.	A,B,C,D
◇2	½ " SHEATHING	4"	12"	(4) 16d NAILS @ 16" O.C. $\frac{5}{8}$" Ø AB @ 32"O.C.	(1) A35 @ 16" O.C.	A,B,C,D
◇3	½ " SHEATHING DOUBLE-SIDED	4"	12"	(3) 16d NAILS @ 16" O.C. $\frac{5}{8}$" Ø AB @ 32"O.C.	(1) A35 @ 24" O.C.	A,B,C,D
◇4	SIMPSON SWSB12x8	SEE DETAIL 24		(6) $\frac{1}{4}$" x 6 $\frac{3}{4}$" SDS HEAVY-DUTY (2) " Ø $\frac{5}{8}$" AB SEE DETAIL 24	SEE DETAIL 24	A,B,C,D,E

A. ALL SHEATHING SHALL BE STRUCTURAL I OR II, APA RATED SHEATHING WITH ALL EDGES BLOCKED.
B. ALL NAILS SHALL BE "COMMON" TYPE U.N.O.
C. ALL HARDWARE SHALL BE "SIMPSON STRONG-TIE" OR APPROVED EQUAL
D. SILL PLATES SHALL BE 2X PRESSURE TREATED DF U.N.O. WITH A MINIMUM OF (2) ANCHOR BOLTS PER PLATE. ONE ANCHOR BOLT WITHIN 12" FROM EACH END WITH 2"X2"X 3/16" PLATE WASHERS AT EACH SILL PLATE ANCHOR BOLT
E. ALL PANELS MAY BE FIELD TRIMMED TO A MINIMUM OF 74 $\frac{1}{2}$". TRIM HEIGHT FROM TOP OF PANEL ONLY, NOT FROM SIDES OR BOTTOM. DRILLING HOLES IS NOT ALLOWED.

DEBIRK ENGINEERING

265 PHEASANTBROOK DRIVE TOWNHOUSES
CENTERVILLE, UTAH
ROOF FRAMING PLAN

No.	Revision/Issue	Date

Stamp
PROFESSIONAL ENGINEER
11/18/22
No. 9019902-2202
W ALEXANDER DeBIRK
STATE OF UTAH

Project: PHEASANTBROOK
Date: OCTOBER 2022
Scale: 3/16" = 1' - 0" UNO
Sheet: S2

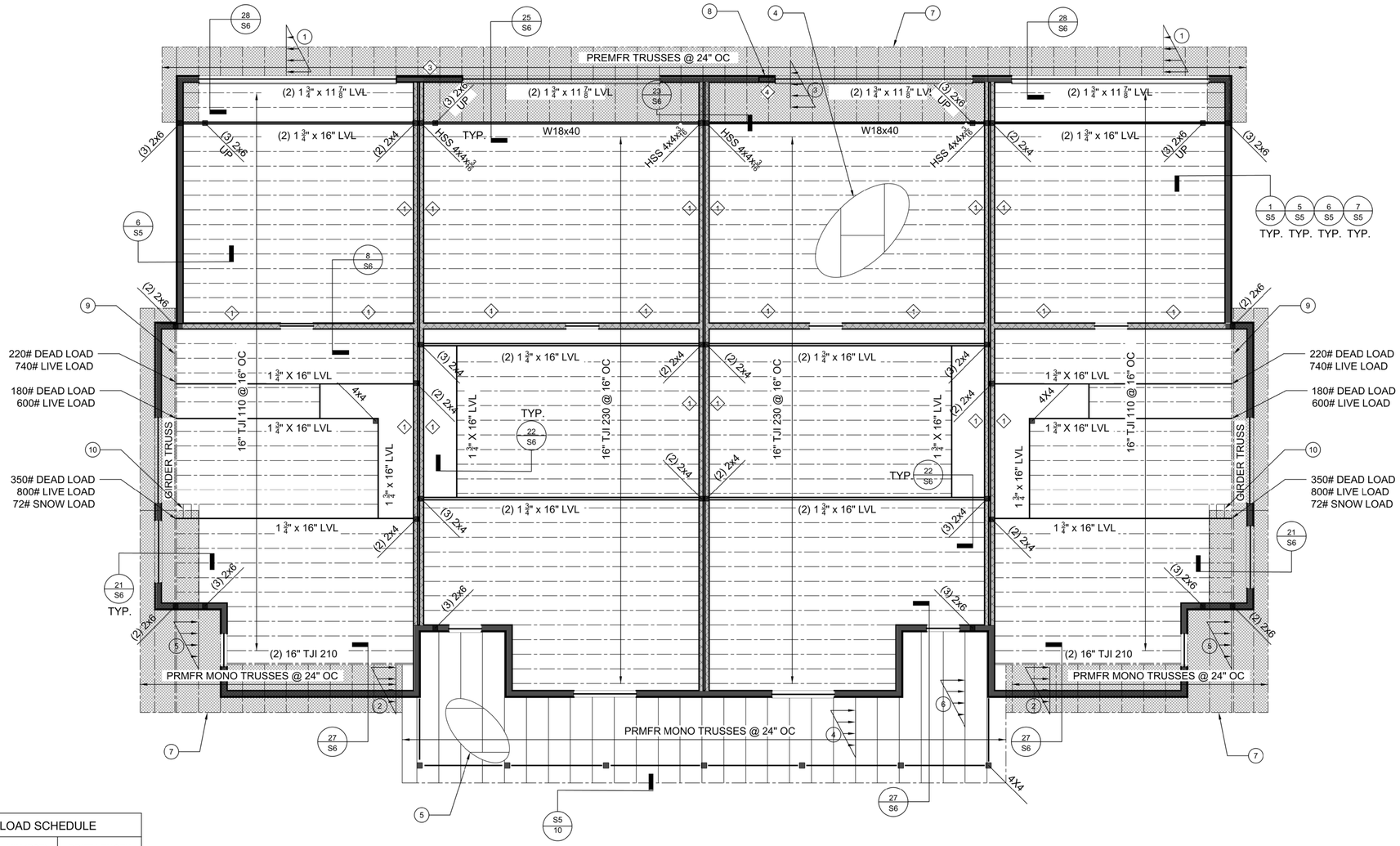

A 2ND FLOOR FRAMING PLAN

SCALE: 3/16" = 1' - 0"

SNOW DRIFT LOAD SCHEDULE			
MARK	MAX (PSF)	MIN (PSF)	DRIFT LENGTH
1	56.0	43.8	2' - 6"
2	56.5	34.5	4' - 6"
3	56.0	21.7	7' - 0"
4	56.0	17.8	7' - 9"
5	45.3	0	9' - 3"
6	52.3	0	10' - 8"

NOTES:
NUMBERS BUBBLED WITH A ◯ ARE KEYED ON THE DRAWING.

1. ALL HEADERS & BEAMS SHALL BE MIN (2) 2 X 8, UNO.
2. ALL BEAMS SHALL BEAR ON A MINIMUM OF (2) 2X STUDS, UNO.
3. ALL NEW EXTERIOR WALLS SHALL BE 2X6 STUDS SPACED AS PER GENERAL NOTES. ALL NEW INTERIOR STUD WALLS SHALL BE 2X4 STUDS SPACED AS PER GENERAL NOTES.
4. SHEATH NEW FLOOR AREAS WITH 3/4" APA-RATED EXPOSURE 1 TONGUE AND GROOVE SHEATHING. GLUE AND NAIL WITH 10d GALVANIZED COMMON NAILS @ 6" OC TO ALL SUPPORTED PLYWOOD PANEL EDGES. FACE GRAIN PERPENDICULAR TO SUPPORTS AS SHOWN.
5. SHEATHE ROOF WITH 5/8" APA-RATED EXPOSURE I SHEATHING. NAIL W/ 8d GALVANIZED COMMON NAILS @ 6" O.C. TO ALL SUPPORTED PLYWOOD PANEL EDGES. FACE GRAIN PERPENDICULAR TO SUPPORTS AS SHOWN.
6. ALL EXTERIOR WALLS SHALL BE TYPE 1 SHEAR WALLS, UNO, SEE SHEAR WALL SCHEDULE.
7. SHEATHE HATCHED AREAS AS PER NOTE 5, SAVE NAILING SHALL BE 8d GALVANIZED COMMON NAILS @ 4" OC TO ALL SUPPORTED PLYWOOD PANEL EDGES.
8. SIMPSON STRONG-WALL SHEAR WALL AT THIS LOCATION, SEE DETAIL 24/S6 & SHEAR WALL SCHEDULE.
9. WHERE GIRDER TRUSS RUNS ALONG 2x STUD WALL, CONNECT TRUSS TO STUD WALL W/ SIMPSON SDS x 6" LAG SCREW @ EA STUD, TOP CHORD AND SILL PLATE OF WALL. SEE DETAIL 21/S6.
10. PLACE FULL-HEIGHT TJI BLOCKING BELOW WALL @ 24" OC.

SHEAR WALL SCHEDULE						
MARK	MATERIAL	8d NAILS		PLATE NAILING / BOLTING	SHEAR TRANSFER	REMARKS
		EDGE	FIELD			
1	½ " SHEATHING	6"	12"	(3) 16d NAILS @ 16" O.C. 5/8" Ø AB @ 32"O.C.	(1) A35 @ 24" O.C.	A,B,C,D
2	½ " SHEATHING	4"	12"	(4) 16d NAILS @ 16" O.C. 5/8" Ø AB @ 32"O.C.	(1) A35 @ 16" O.C.	A,B,C,D
3	½ " SHEATHING DOUBLE-SIDED	4"	12"	(3) 16d NAILS @ 16" O.C. 5/8" Ø AB @ 32"O.C.	(1) A35 @ 24" O.C.	A,B,C,D
4	SIMPSON SWSB12x8	SEE DETAIL 24		(6) 1/4" x 6 3/4" SDS HEAVY-DUTY (2) " Ø 5/8" AB SEE DETAIL 24	SEE DETAIL 24	A,B,C,D,E

A. ALL SHEATHING SHALL BE STRUCTURAL I OR II, APA RATED SHEATHING WITH ALL EDGES BLOCKED.
B. ALL NAILS SHALL BE "COMMON" TYPE U.N.O.
C. ALL HARDWARE SHALL BE "SIMPSON STRONG-TIE" OR APPROVED EQUAL
D. SILL PLATES SHALL BE 2X PRESSURE TREATED DF U.N.O. WITH A MINIMUM OF (2) ANCHOR BOLTS PER PLATE. ONE ANCHOR BOLT WITHIN 12" FROM EACH END WITH 2"X2"X 3/16" PLATE WASHERS AT EACH SILL PLATE ANCHOR BOLT
E. ALL PANELS MAY BE FIELD TRIMMED TO A MINIMUM OF 74 3/2". TRIM HEIGHT FROM TOP OF PANEL ONLY, NOT FROM SIDES OR BOTTOM. DRILLING HOLES IS NOT ALLOWED.

DEBIRK ENGINEERING

265 PHEASANTBROOK DRIVE TOWNHOUSES
CENTERVILLE, UTAH
2ND FLOOR FRAMING PLAN

No.	Revision/Issue	Date

Stamp
PROFESSIONAL ENGINEER
11/18/22
No. 9019902-2202
W ALEXANDER DeBIRK
STATE OF UTAH

Project: PHEASANTBROOK
Date: OCTOBER 2022
Scale: 3/16" = 1' - 0" UNO
Sheet: S3

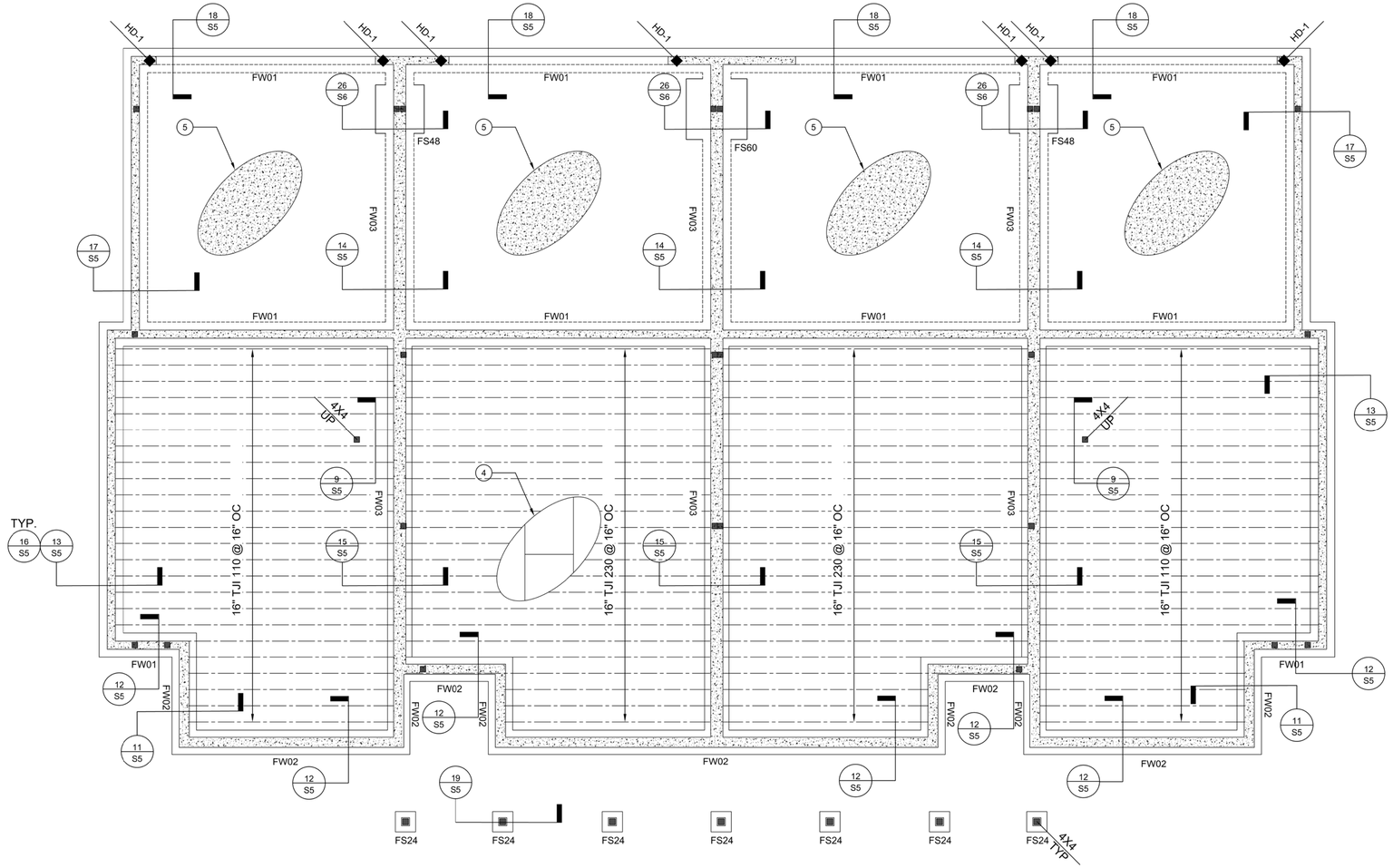

(A) 1ST FLOOR FRAMING PLAN

SCALE: 3/16" = 1' - 0"

NOTES:
NUMBERS BUBBLED WITH A ◯ ARE KEYED ON THE DRAWING.

1. ALL HEADERS & BEAMS SHALL BE MIN (2) 2 X 8, UNO.
2. ALL BEAMS SHALL BEAR ON A MINIMUM OF (2) 2X STUDS, UNO.
3. ALL NEW EXTERIOR WALLS SHALL BE 2X6 STUDS SPACED AS PER GENERAL NOTES. ALL NEW INTERIOR STUD WALLS SHALL BE 2X4 STUDS SPACED AS PER GENERAL NOTES.
4. SHEATH NEW FLOOR AREAS WITH $\frac{3}{4}$" APA-RATED EXPOSURE 1 TONGUE AND GROOVE SHEATHING. GLUE AND NAIL WITH 10d GALVANIZED COMMON NAILS @ 6" OC TO ALL SUPPORTED PLYWOOD PANEL EDGES. FACE GRAIN PERPENDICULAR TO SUPPORTS AS SHOWN.
5. 4" CONCRETE SLAB OVER 4" FREE DRAINING GRAVEL.

HOLDOWN SCHEDULE					
MARK	SIZE	MINIMUM EDGE MEMBER	LENGTH	EDGE MEMBER ATTACHMENT	NOTES
HD 1	STHD14	(2) 2x	39 $\frac{5}{8}$"	(24) 16d SINKERS	SEE DETAIL 4/S5 FOR TYPICAL INSTALLATION.

NOTES:
1. ALL ANCHORS ARE SIMPSON STRONG-TIE.
2. INSTALLATION OF ALL HOLDOWN ANCHORS AND STRAPS SHALL BE PER MANUFACTURERS RECOMMENDATIONS AND SPECIFICATIONS.
3. PROVIDE SHEARWALL EDGE NAILING ALONG STUDS CONNECTED TO HOLDOWN ANCHORS AND STRAPS.
4. ANY HOLDOWN MAY BE REPLACED WITH A HIGHER NUMBERED HOLDOWN.

FOUNDATION WALL SCHEDULE							
MARK	THICKNESS	MAX HEIGHT	VERTICAL REINF		HORIZONTAL REINF		REMARKS
			SIZE	SPACING	SIZE	SPACING	
FW01	8"	4'-0"	#4	18"	#4	18"	TYP UNO
FW02	10"	4'-0"	#4	14"	#4	18"	TYP UNO
FW03	12"	4'-0"	#4 EACH FACE	12"	#4 EACH FACE	12"	TYP UNO

FOOTING SCHEDULE									
MARK	THICKNESS	DIMENSIONS	LONGITUDINAL REINF			TRANSVERSE REINF			REMARKS
			NO.	SIZE	SPACING	NO.	SIZE	SPACING	
FC24	10"	24" x CONT	3	#4	MAX 11"	NA	NA	NA	TYP UNO
FS24	10"	24" x 24"	3	#4	MAX 11"	3	#4	MAX 11"	
FS48	10"	48" x 48"	5	#5	MAX 11"	5	#5	MAX 11"	
FS60	10"	60" x 60"	6	#5	MAX 11"	6	#5	MAX 11"	

NOTES:
1. REINFORCING STEEL SHALL BE ASTM A615 GRADE 60.
2. ALL REINFORCEMENT SHALL BE SECURELY TIED AND HELD IN PLACE.
3. PROVIDE ACCESSORIES RECOMMENDED BY THE CRSI NECESSARY TO PROPERLY SUPPORT REINFORCING AT POSITIONS SHOWN ON PLANS.
4. UNLESS OTHERWISE SHOWN IN DETAILS, PLACE VERTICAL AND HORIZONTAL REINFORCEMENT AT CENTER OF WALL.
5. IN ADDITION TO SCHEDULED HORIZONTAL REINFORCEMENT, PROVIDE (2) #4 CONTINUOUS BARS TOP AND BOTTOM OF 8" WALLS.
6. DOWEL VERTICAL BARS 36 DIAMETERS INTO STRUCTURE ABOVE AND FOOTINGS BELOW. PROVIDE 90 DEGREE HOOK WHERE 36 DIAMETERS IS NOT POSSIBLE.
7. ALL CONTINUOUS REINFORCEMENT SHALL TERMINATE WITH A 90 DEGREE TURN OR A SEPARATE CORNER BAR. ALL SPLICES SHALL HAVE A MINIMUM LAP OF 24".

SHEAR WALL SCHEDULE						
MARK	MATERIAL	8d NAILS		PLATE NAILING / BOLTING	SHEAR TRANSFER	REMARKS
		EDGE	FIELD			
1	½ " SHEATHING	6"	12"	(3) 16d NAILS @ 16" O.C. $\frac{5}{8}$" Ø AB @ 32"O.C.	(1) A35 @ 24" O.C.	A,B,C,D
2	½ " SHEATHING	4"	12"	(4) 16d NAILS @ 16" O.C. $\frac{5}{8}$" Ø AB @ 32"O.C.	(1) A35 @ 16" O.C.	A,B,C,D
3	½ " SHEATHING DOUBLE-SIDED	4"	12"	(3) 16d NAILS @ 16" O.C. $\frac{5}{8}$" Ø AB @ 32"O.C.	(1) A35 @ 24" O.C.	A,B,C,D
4	SIMPSON SWSB12x8	SEE DETAIL 24		(6) $\frac{1}{4}$" x 6 $\frac{3}{4}$" SDS HEAVY-DUTY (2) " Ø $\frac{5}{8}$" AB SEE DETAIL 24	SEE DETAIL 24	A,B,C,D,E

A. ALL SHEATHING SHALL BE STRUCTURAL I OR II, APA RATED SHEATHING WITH ALL EDGES BLOCKED.
B. ALL NAILS SHALL BE "COMMON" TYPE U.N.O.
C. ALL HARDWARE SHALL BE "SIMPSON STRONG-TIE" OR APPROVED EQUAL
D. SILL PLATES SHALL BE 2X PRESSURE TREATED DF U.N.O. WITH A MINIMUM OF (2) ANCHOR BOLTS PER PLATE. ONE ANCHOR BOLT WITHIN 12" FROM EACH END WITH 2"X2"X 3/16" PLATE WASHERS AT EACH SILL PLATE ANCHOR BOLT

DEBIRK ENGINEERING

265 PHEASANTBROOK DRIVE TOWNHOUSES
CENTERVILLE, UTAH
1ST FLOOR FRAMING PLAN

No.	Revision/Issue	Date

Stamp
PROFESSIONAL ENGINEER
11/18/22
No. 9019902-2202
W ALEXANDER DeBIRK
STATE OF UTAH

Project: PHEASANTBROOK
Date: OCTOBER 2022
Scale: 3/16" = 1' - 0" UNO
Sheet: S4

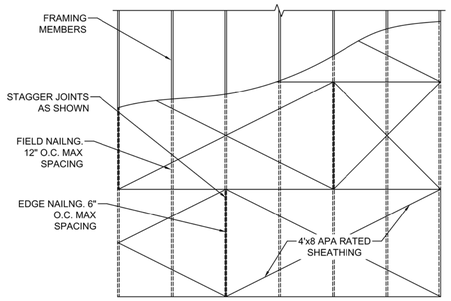

1 TYPICAL HORIZONTAL DIAPHRAGM (UNBLOCKED)

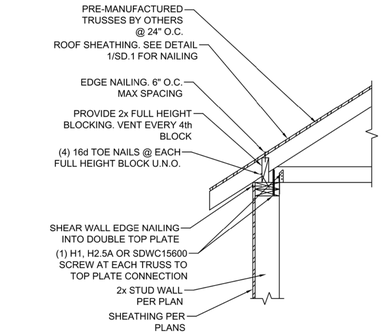

2 TYP. TRUSS TO WALL CONNECTION

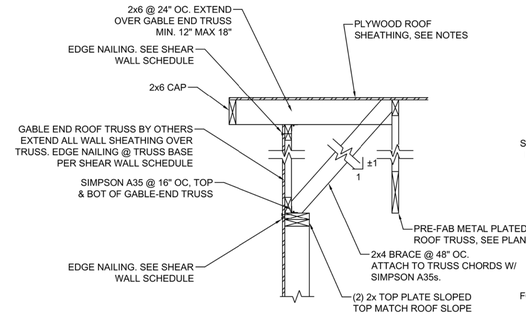

3 GABLE END TRUSS TO WALL

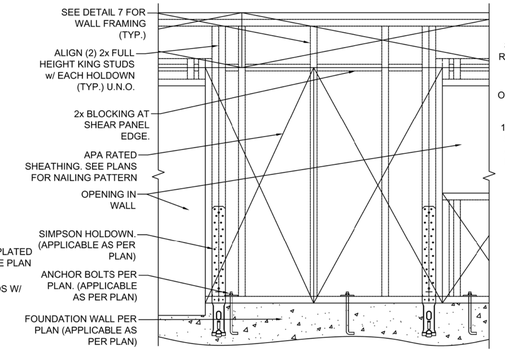

4 TYP. SHEAR WALL CONNECTION

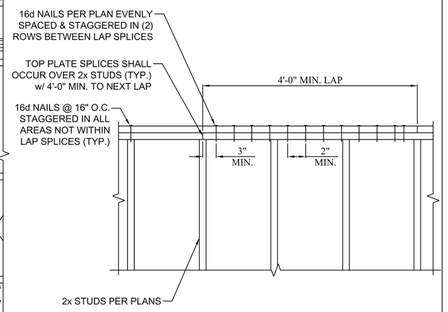

5 TYP. TOP PLATE SPLICE CONNECTION

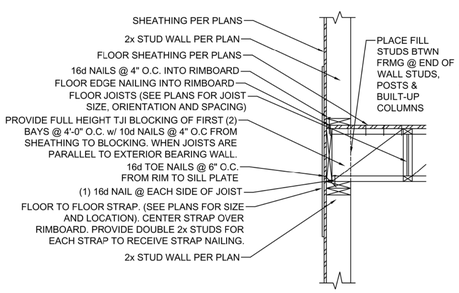

6 TYP. EXTERIOR BEARING WALL

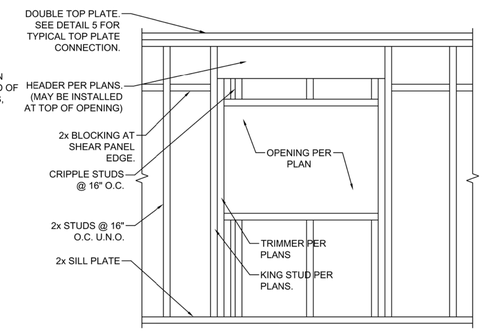

7 TYPICAL WALL FRAMING

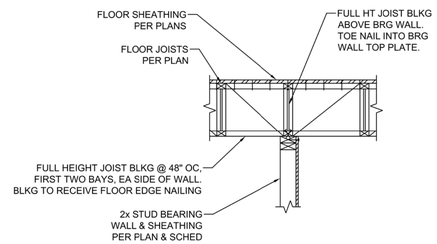

8 INT. BEARING WALL (JOISTS PARALLEL)

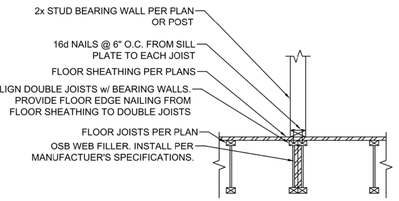

9 BEARING WALL ON JOISTS (JOISTS PARALLEL)

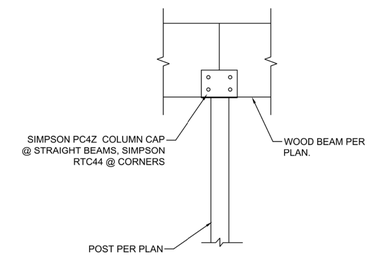

10 WOOD BEAMS TO SINGLE POST

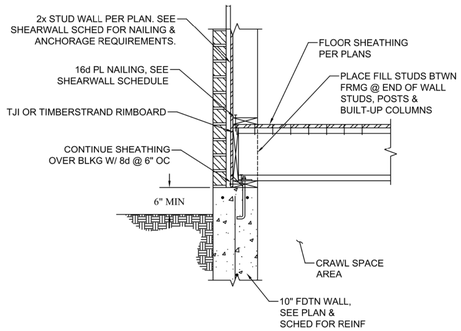

11 JOIST TO FDN. WALL (PERP.) W/ VENEER

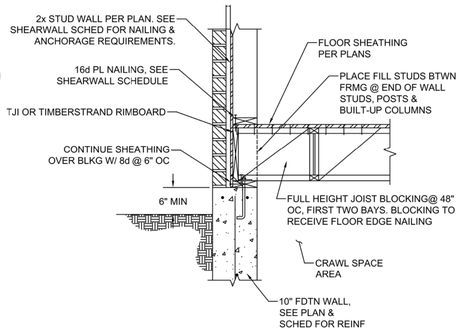

12 JOIST TO FDN. WALL (PAR.) W/ VENEER

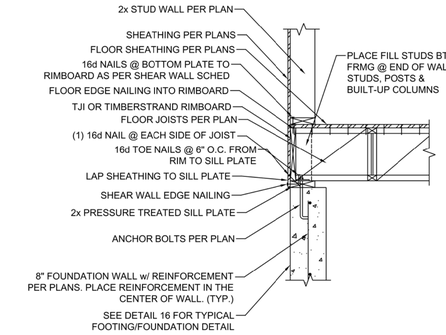

13 JOIST TO FDN. WALL W/O VENEER

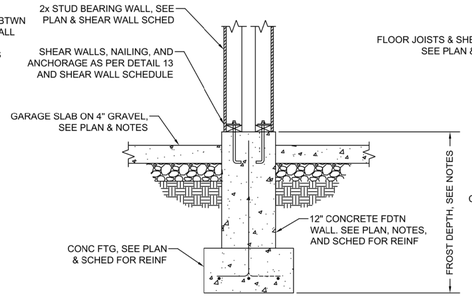

14 GARAGE INTERIOR FOOTING

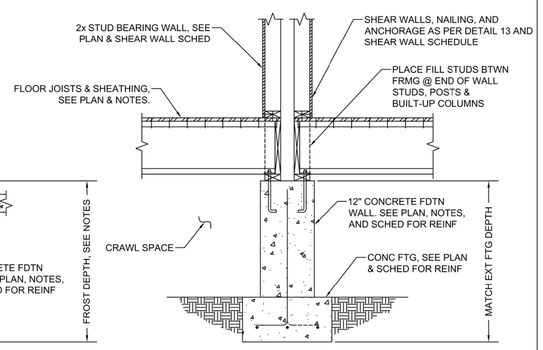

15 TYP. INTERIOR FOOTING

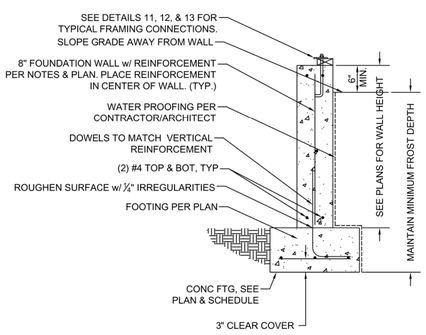

16 TYP. FOOTING & FOUNDATION

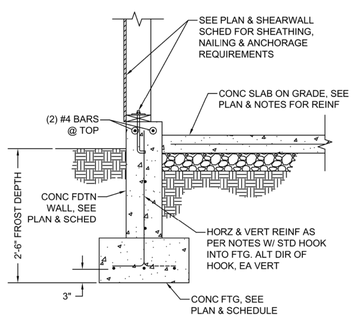

17 TYP. GARAGE EXT FOOTING

SCALE $\frac{3}{4}$" = 1'-0"

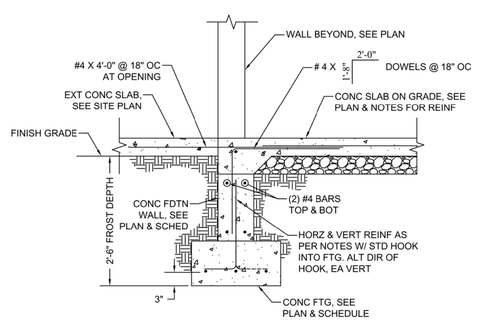

18 GARAGE OPENING FOOTING

SCALE $\frac{3}{4}$" = 1'-0"

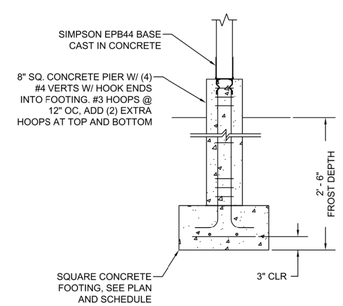

19 TYP. PIER FOUNDATION

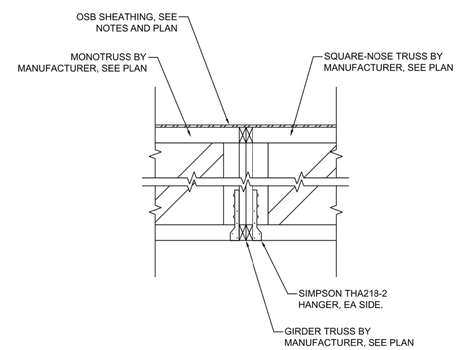

20 TRUSS TO GIRDER TRUSS

DEBIRK ENGINEERING

265 PHEASANTBROOK DRIVE TOWNHOUSES
CENTERVILLE, UTAH
DETAILS

No.	Revision/Issue	Date

Stamp: PROFESSIONAL ENGINEER — 11/18/22 — No. 9019902-2202 — W ALEXANDER DeBIRK — STATE OF UTAH

Project: PHEASANTBROOK
Date: OCTOBER 2022
Scale: 3/4" = 1' - 0" UNO
Sheet: S5

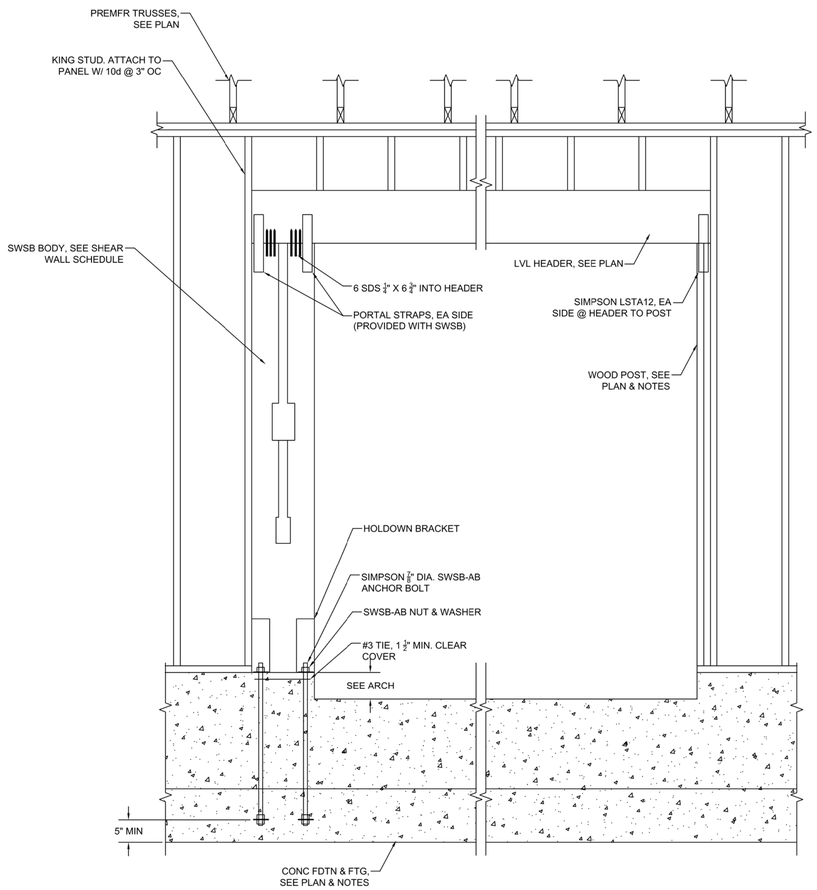

24 SIMPSON STRONG WALL

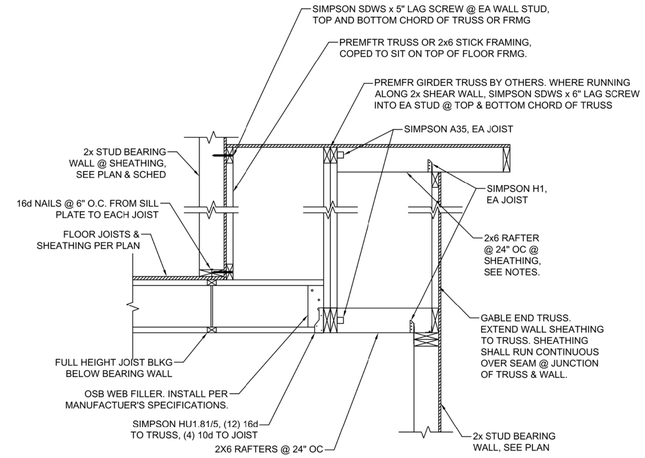

21 DIAPHRAGM SHEAR TRANSFER

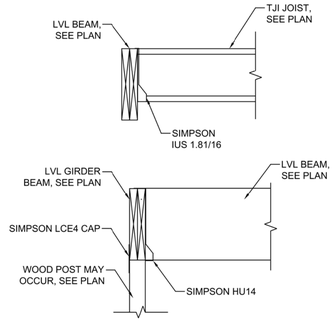

22 GIRDER BEAM CONNECTIONS

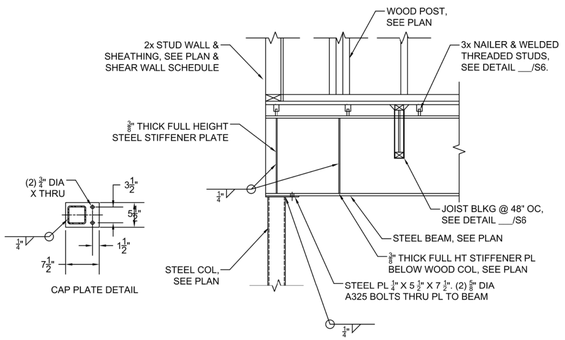

23 STEEL BEAM TO COLUMN

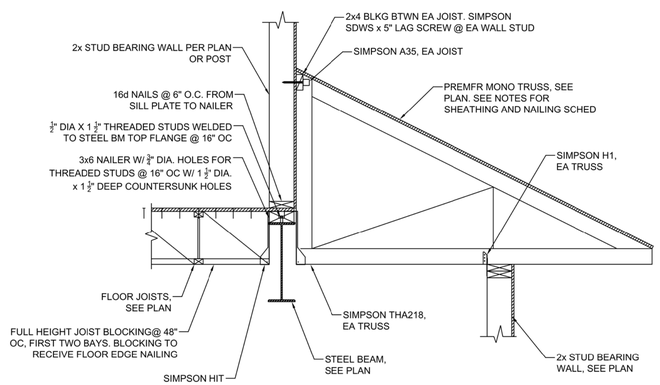

25 MONOTRUSS TO STEEL BEAM

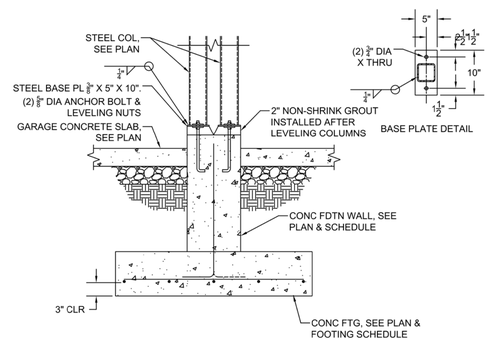

26 STEEL COLUMN BASE

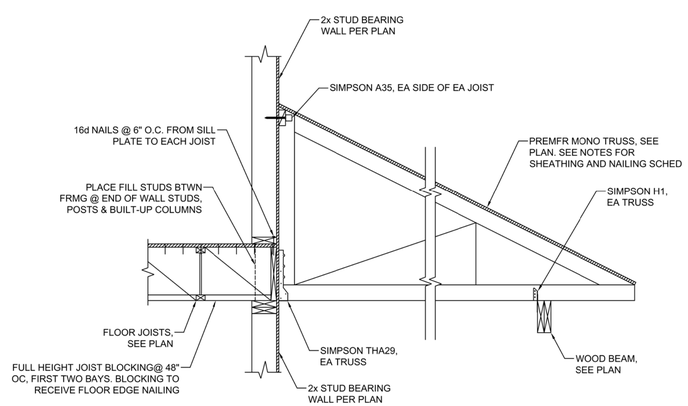

27 MONOTRUSS TO STUD WALL

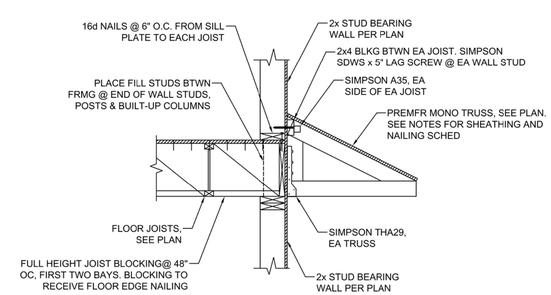

28 MONOTRUSS CANTILEVER

DEBIRK ENGINEERING

265 PHEASANTBROOK DRIVE TOWNHOUSES
CENTERVILLE, UTAH
DETAILS CONTINUED

No.	Revision/Issue	Date

Stamp

PROFESSIONAL ENGINEER
11/18/22
No. 9019902-2202
W. ALEXANDER DeBIRK
STATE OF UTAH

Project: PHEASANTBROOK
Date: OCTOBER 2022
Scale: 3/4" = 1' - 0" UNO
Sheet: S6

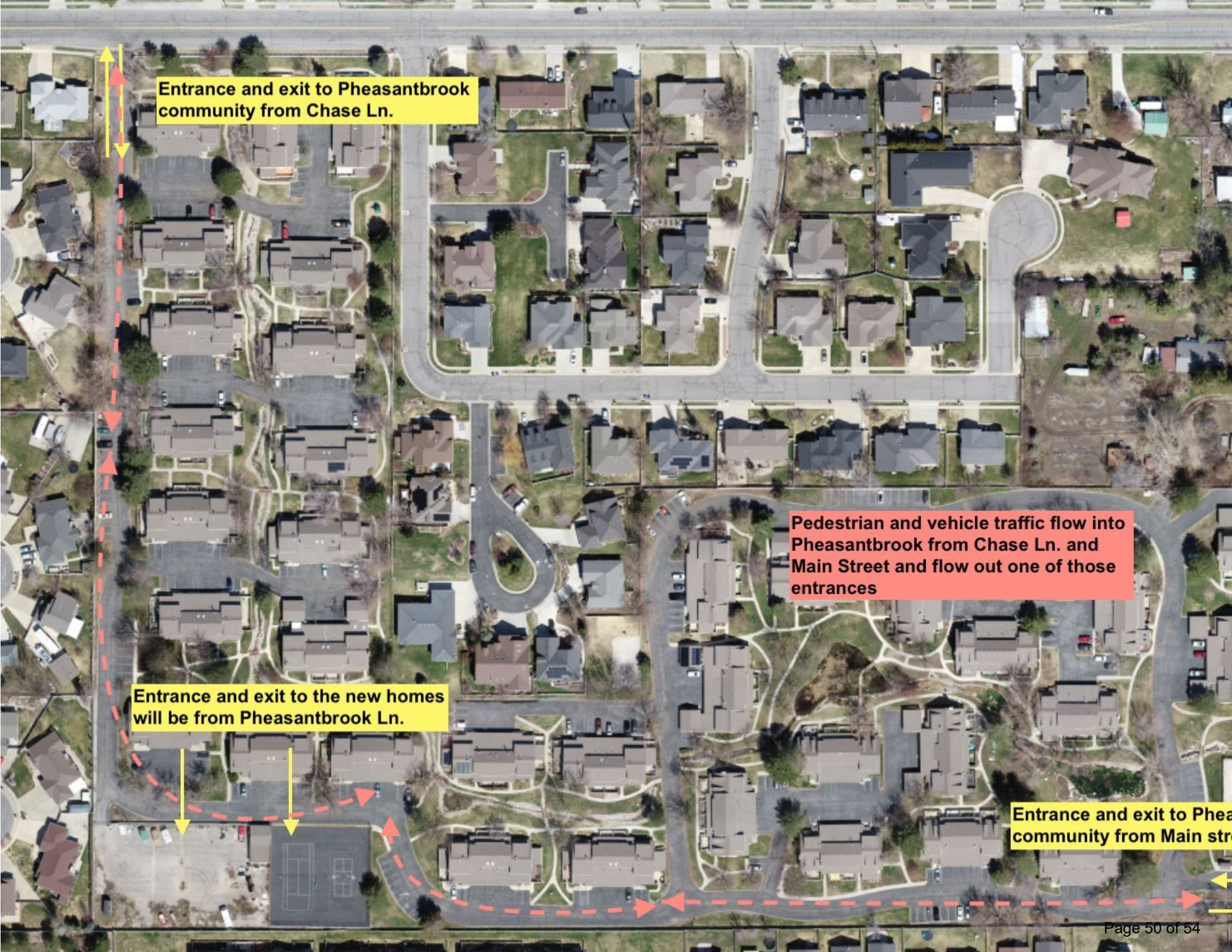
Entrance and exit to Pheasantbrook community from Chase Ln.
Pedestrian and vehicle traffic flow into Pheasantbrook from Chase Ln. and Main Street and flow out one of those entrances
Entrance and exit to the new homes will be from Pheasantbrook Ln.
Entrance and exit to Phea
community from Main str

PLANNING COMMISSION

Staff Report

6/28/2023

Item No. 1.
Title: Community Development Director's Report
Initiated By:
Staff Representative:

SUBJECT:

Next Planning Commission Meeting - July 12, 2023
Tentative Items:

- *Conditional Use Permit - Vechicle Sales, Top Gear Motors*
- *Small Subdivision - Williamsburg Place, Lot 9*
- *Conceptual Subdivision - Chase Creek, previously tabled by PC*
- *Conceptual Site Plan - Aiden Bell LC Site (former Les Schwab)*
- *Conceptual Site Plan - Miles Bell LC (aka Dave's Complete Auto*)

RECOMMENDATION:

BACKGROUND:

ATTACHMENTS:

PLANNING COMMISSION

Staff Report

6/28/2023

Item No. 1.
Title: Minutes Review and Approval
Initiated By:
Staff Representative:

SUBJECT:

RECOMMENDATION:

BACKGROUND:

ATTACHMENTS:

1. 6-14-23 PC Minutes

PLANNING COMMISSION MINUTES OF MEETING
Wednesday, June 14, 2023
7:00 p.m.

A quorum being present at City Hall, 250 North Main Street, Centerville, Utah, the meeting of the Centerville City Planning Commission was called to order at 7:00 p.m.

MEMBERS PRESENT
Shawn Hoth
Mason Kjar
LaRae Patterson (via Zoom)
Heidi Shegrud, Chair

MEMBERS ABSENT
Matt Larsen, Vice Chair
Tyler Moss

STAFF PRESENT
Cory Snyder, Community Development Director
Lisa Romney, City Attorney
Whittney Black, Assistant Planner

VISITORS
Sam Nelson, Stokes Stevenson

LEGISLATIVE PRAYER OR THOUGHT Commissioner Hoth

PLEDGE OF ALLEGIANCE

PUBLIC HEARING – PRELIMINARY SUBDIVISION – STOKES STEVENSON INDUSTRIAL FLEX SITE

Community Development Director Cory Snyder explained the applicant desired to develop a significant underutilized portion of property at approximately 50 South 1250 West as an industrial flex use project consisting of multiple buildings and related improvements. The Planning Commission previously approved the Conceptual Subdivision and the Final Site Plan for the project. Mr. Snyder said staff recommended approval of the Preliminary Subdivision Plan with suggested conditions.

Chair Shegrud opened a public hearing at 7:10 p.m., and closed the public hearing seeing no one step forward to comment. The Planning Commission discussed the application. Chair Shegrud **moved** to approve the Preliminary Subdivision Plan for the Centerville Industrial Flex Development, located at approximately 50 South 1250 West, subject to the following conditions and with the following reasons for action. Commissioner Kjar seconded the motion, which passed by unanimous vote (4-0).

Conditions:

1. The subdivider shall submit a Final Subdivision Plat that conforms to the requirements of CMC 15.04.030.
2. The Final Subdivision Plat shall be prepared in accordance with the City's Subdivision Plat Format, as deemed acceptable by the City Engineer.
3. The Final Subdivision Plat shall depict the subdivision layout that conforms to the City approved Final Site Plan of May of 2023.
4. The Final Subdivision Plat shall address the following:

a. Provide the required utility easements, as required by ordinance.
b. Note the required "open space" easement for the common areas.
c. Provide an updated Preliminary Title Report for review by applicable City staff.

5. Final Construction Plans may consist of the Construction Drawings for the related Final Site Plan Approval, provided the plans are deemed acceptable by the City Engineer. If not, the applicant shall prepare any needed amendments that are deemed necessary.
6. A portion of this Preliminary Subdivision Plan Approval and proposed development is outside of the City limits (i.e., West Bountiful) and has been deemed to be reviewed utilizing the subdivision standards in accordance with the MOU between the Cities and the developer. However, such review is not a guarantee, sanction and/or an approval by West Bountiful.

Reasons for action:

a. The Planning Commission finds that a Preliminary Subdivision Plan is consistent with the City approved Final Site Plan of May of 2023.
b. The Planning Commission finds that the Planned Unit Development (PUD) implements the existing Final Site Plan Approval granted by the City in May of 2023.
c. Therefore, the Planning Commission finds that, with the conditions imposed, the Preliminary Subdivision Plan meets the requirements of CMC 15.06.010 Planned Unit Development.

TRAINING – GENERAL PLAN

City Attorney Lisa Romney provided training regarding the General Plan, and answered questions from the Planning Commission.

COMMUNITY DEVELOPMENT DIRECTOR'S REPORT

The Planning Commission was scheduled to meet next on June 28, 2023. Mr. Snyder and Commissioners discussed the planned General Plan update process.

MINUTES REVIEW AND APPROVAL

Minutes of the May 24, 2023 Planning Commission Meeting were reviewed. Commissioner Hoth **moved** to approve the minutes. Chair Shegrud seconded the motion, which passed by unanimous vote (4-0).

ADJOURNMENT

At 7:52 p.m., Chair Shegrud **moved** to adjourn the meeting. Commissioner Kjar seconded the motion, which passed by unanimous vote (4-0).

_____ _____
Jennifer Robison, City Recorder Date Approved