CENTERVILLE CITY

250 North Main · Centerville, Utah 84014-1824 · (801) 295-3477 · Fax: (801) 292-8034

Incorporated in 1915

Mayor
Paul A. Cutler

City Council
Tamilyn Fillmore
William Ince
Stephanie Ivie
George McEwan
Robyn Mecham

City Manager
Steve H. Thacker

interoffice MEMORANDUM

to: Mayor Cutler
City Council
cc: Department Heads
Planning Commission
from: Steve H. Thacker, City Manager
subject: City Manager's Summary of April 19, 2016 Council Meetings
date: April 1, 2016

5:30 **Work Session** – The City Council will meet first in a work session at 5:30 p.m. to discuss how to fund the long-term water main replacement plan presented by staff in an earlier work session. Staff have prepared five water rate increase scenarios for the Council to consider, including four pay-as-you-go scenarios and one involving issuance of new debt. I am hopeful the Council will not need the entire work session period to agree on a preferred scenario that can be incorporated in the budget process for FY 2017. If time remains, the agenda shows a second work session topic--proposed amendments to the Long-Term Sick Leave Policy, a matter the Council discussed earlier this year and which is on the regular meeting agenda for possible action. Dinner will be available beginning about 5:15 p.m.

7:00 **Regular City Council Meeting**

E.1. **Summary Action Calendar** – In their April 5 meeting, the Council expressed support for a two-year contract extension with ACE Disposal for curbside solid waste collection services. The first action under Summary Action Calendar is the approval of an amendment to the current contract for this purpose. The second action is the amendment of the City's Fee Schedule to increase the collection service fee for green waste from $6.16 to $7.40 per month, to fund the City's increased cost per the amended contract with ACE. The user fees for regular household garbage and recycling collection would not change.

E.2. **Zone Map Amendment – Lund Lane Property** – A public hearing on this proposed rezone of property from Agricultural-Low to Residential-Low was held on April 5. The Council chose to postpone action until the April 19 meeting.

E.3. **Bid Award for Street Reconstruction and Overlays** – Six bids were received for this project, which includes the reconstruction of 1825 North and pavement overlays on 1900 North (100 East to 300 East) and Willow Valley Drive (575 West to 400 West). Advanced Paving is the low bidder at $410,978.

MAKING Life BETTER
Centerville City

E.4. **Direction re County Property on 100 South** – At the March 15 City Council meeting, Davis County officials reported their intention to sell approximately 2 acres the County owns between 100 South and 200 South (about 700 East). The County officials agreed to delay the public bidding process for sale of this land for 60 days to give the City Council opportunity to consider whether to seek to purchase it. Therefore, the Council should determine whether to pursue that possibility, and if so, what additional analysis should be done. The 60-day period expires on or about May 15.

E.5. **Cost-sharing Agreement with Maverik for Trailhead** – Maverik intends to construct a gas station/convenience store this year on the southwest corner of 1250 West Parrish Lane. They are willing to pay half the cost of trailhead improvements on that corner as part of the requirement to provide upgraded amenities under the Parrish Lane Development Guidelines. Maverik would grant an easement to the City on that corner for a pavilion, drinking fountain, bike repair stand and pump, bench, kiosk, seat wall and colored concrete. Maverik would administer the construction of these amenities in coordination with their site improvements and the City would pay half the cost using RDA funds.

E.6. **Municipal Code Amendments – Title 14** – This is a continuation of the City Attorney's update of the City Code as it is converted to online. Title 14 is the Traffic Code. Police Chief Paul Child has reviewed the proposed revisions, which are primarily reformatting, renumbering and updating to conform with State law.

E.7. **Municipal Code and Fee Schedule Amendments re Franchise Application Fees** – The franchise sections of the City Code were updated within the past few months. Those updates included the intent to follow up by establishing fees for franchise applications--thus the purpose of these amendments.

E.8. **Award Contract for Annual Audit Services** – The City's current contract for the annual financial audit is expiring. Proposals for a new five-year contract were received from several CPA firms. See staff report for a summary and comparison of those proposals.

E.9. **Personnel Policies and Procedures – Amendments – Long-Term Sick Leave** – In 2015 staff proposed amendments to the City's Long-Term Sick Leave Policy to reduce the long-term financial liability associated with that leave benefit. This issue has carried over to the new City Council, which discussed the matter earlier this year. I am hoping the City Council is now ready to approve and implement the recommendations. The agenda for the work session prior to the regular Council meeting shows the Council may discuss this matter in that work session, with the possibility of formal action later in the regular meeting.

E.10. **Financial Report** – Blaine Lutz has prepared the financial report for the 9-month period ending March 31, 2016 and will answer questions at the meeting.

E.11. **Mayor's Report** – Mayor Cutler will report on Fire Agency and UTOPIA/UIA matters.

E.12. **City Manager's Report** – The installation of fencing on the new pedestrian bridge has been delayed again, which I will explain at the meeting. I will also seek direction regarding when the Council wants to schedule the next public hearing for the ADU ordinance.

E.13. **Minutes Review** – The minutes to be approved are available online via NovusAgenda. This action is normally at the beginning of each council meeting. However, the minutes of the March 23 goal-setting work session are among those to be approved. Therefore, the Mayor agreed it would be helpful to review those minutes in conjunction with the next item on the agenda.

E.14. **Clarify goal-setting process outcome** – I would like the Council to clarify its goals as expressed in the minutes of the March 23 work session, including expectations of time frames in which to begin and/or achieve those goals.

E.15. **Miscellaneous Business** – Mayor Cutler would like Councilmembers Ince and Fillmore to report on the recent ULCT Conference in St. George.

E.16. **Closed Meeting, if needed** – At this time I do not know of a need for a closed meeting, but the agenda provides for that possibility.

E.17. **Appointments to City Boards/Committees** – Mayor Cutler may recommend appointments.

E.18. **Adjourn to RDA Meeting** – If the City Council approves the cost-sharing agreement with Maverik in their regular meeting for trailhead improvements, they should hold a Redevelopment Agency meeting to approve tax increment funding to pay for the City's share of that cost. The City's 50% share is estimated to be about $40,000.

Potential Agenda Items for May 3, 2016 City Council or RDA meetings (subject to change):

- Public hearing – Zone Map & Zone Code Text Amendment re the Centerville Deuel Creek Historic District (Chapter 12-49)
- Consider New Animal Control Agreement with Davis County
- Presentation of FY 2017 Proposed Budget
- RDA meeting – Presentation of FY 2017 Proposed RDA Budget

ST/mlm

CENTERVILLE CITY COUNCIL AGENDA

NOTICE IS HEREBY GIVEN THAT THE CENTERVILLE CITY COUNCIL WILL HOLD ITS REGULAR PUBLIC MEETING AT 7:00 P.M. ON TUESDAY, APRIL 19, 2016 AT THE CENTERVILLE CITY COMMUNITY CENTER AND CITY HALL COUNCIL CHAMBERS, 250 NORTH MAIN STREET, CENTERVILLE, UTAH. THE AGENDA IS SHOWN BELOW.

Meetings of the City Council of Centerville City may be conducted via electronic means pursuant to Utah Code Ann. § 52-4-207, as amended. In such circumstances, contact will be established and maintained via electronic means and the meeting will be conducted pursuant to the Electronic Meetings Policy established by the City Council for electronic meetings.

Centerville City, in compliance with the Americans With Disabilities Act, provides accommodations and auxiliary communicative aids and services for all those citizens in need of assistance, including hearing devices. Persons requesting these accommodations for City-sponsored public meetings, services, programs, or events should call Blaine Lutz, Centerville Finance Director, at 295-3477, giving at least 24 hours notice prior to the meeting.

A notebook containing supporting materials for the business agenda items is available for public inspection and review at City Hall and will be available for review at the meeting. Upon request, a citizen may obtain (without charge) the City Manager's memo summarizing the agenda business, **or may read this memo on the City's website: http://centerville.novusagenda.com/agendapublic.**

Tentative Time: - The times shown below are tentative and are subject to change during the meeting.

5:30 WORK SESSION – a) Continue discussion on master plans and funding for streets and water mains; and b) Discuss proposed revisions to Long-Term Sick Leave Policy

7:00 **A. ROLL CALL**
(See City Manager's Memo for summary of meeting business)

B. PLEDGE OF ALLEGIANCE

C. PRAYER OR THOUGHT
Steve Thacker

7:05 **D. OPEN SESSION (This item allows for the public to comment on any subject of municipal concern, including agenda items that are not scheduled for a public hearing. Citizens are encouraged to limit their comments to two (2) minutes per person. Citizens may request a time to speak during Open Session by calling the City Recorder's office at 801-295-3477, or may make such request at the beginning of Open Session.) Please state your name and city of residence.**

E. BUSINESS

7:10 1. Summary Action Calendar
   a. Amendment No. 2 to Agreement with ACE Disposal for solid waste, recycling and green waste collection services
   b. Fee Schedule Amendment regarding Green Waste Collection Services and Garbage Container Costs - Resolution No. 2016-09

(OVER)

7:10	2.	Zone Map Amendment (Rezone) - 77 West Lund Lane from A-L (Agricultural-Low) to R-L (Residential-Low) ****Tabled from April 5, 2016**** Consider Zone Map Amendment (rezone) for approximately 4.85 acres of property located at approximately 77 West Lund Lane from Agricultural-Low (A-L) to Residential-Low (R-L) – Ordinance No. 2016-08
7:25	3.	Award bid for street reconstruction and overlays to Advanced Paving in the amount of $410,977.53
7:40	4.	Direction re County property on 100 South
8:00	5.	Cost-sharing agreement with Maverik regarding Trailhead improvements at 1250 West Parrish Lane
8:10	6.	Municipal Code Amendments - Title 14 - Traffic Code ****Tabled from April 5, 2016**** Consider Ordinance No. 2016-10 amending various provisions of Title 14 of the Centerville Municipal Code regarding the Traffic Code
8:20	7.	Municipal Code and Fee Schedule Amendments Regarding Franchise Application Fees a. Consider Municipal Code Amendments enacting Section 11-01-057 regarding Franchise Application Fees - Ordinance No. 2016-11 b. Consider City Fee Schedule Amendments regarding Franchise Application Fees - Resolution No. 2016-10
8:30	8.	Award bid for audit contract
8:40	9.	Personnel Policies and Procedures - Amendments - Long-Term Sick Leave and All-Purpose Leave Consider Resolution No. 2016-11 amending Section 4.150 of the Personnel Policies and Procedures regarding Long-Term Sick Leave and amending Section 4.140 of the same regarding All-Purpose Leave
8:50	10.	Financial Report for period ending March 31, 2016
8:55	11.	Mayor's Report a. Fire Agency Report b. UTOPIA/UIA financial reports
9:05	12.	City Manager's Report a. Parrish Lane/Pedestrian Bridge fencing project update b. Schedule public hearing for Accessory Dwelling Unit ordinance
9:10	13.	**MINUTES REVIEW AND ACCEPTANCE** March 23, 2016 joint work session (amended from 4-5-2016 meeting); April 5, 2016 work session, regular Council meeting and closed meeting minutes
9:15	14.	Clarify goal-setting process outcome

9:45	15.	Miscellaneous Business a. ULCT Conference Report
9:55	16.	Closed meeting, if necessary, for reasons allowed by state law , including, but not limited to, the provisions of Section 52-4-205 of the Utah Open and Public Meetings Act, and for attorney-client matters that are privileged pursuant to *Utah Code Ann.* § 78B-1-137, as amended.
9:55	17.	Possible action following closed meeting, including appointments to boards and committees
10:00	18.	Adjourn to RDA meeting

F. ADJOURNMENT

Items of Interest (i.e., newspaper articles, items not on agenda); Posted in-meeting information

Marsha L. Morrow, MMC
Centerville City Recorder

CENTERVILLE CITY COUNCIL AGENDA

NOTICE IS HEREBY GIVEN THAT THE CENTERVILLE CITY COUNCIL WILL HOLD ITS REGULAR PUBLIC MEETING AT 7:00 PM ON APRIL 19, 2016 AT THE CENTERVILLE CITY COMMUNITY CENTER AND CITY HALL COUNCIL CHAMBERS, 250 NORTH MAIN STREET, CENTERVILLE, UTAH. THE AGENDA IS SHOWN BELOW.

Meetings of the City Council of Centerville City may be conducted via electronic means pursuant to Utah Code Ann. 52-4-207, as amended. In such circumstances, contact will be established and maintained via electronic means and the meeting will be conducted pursuant to the Electronic Meetings Policy established by the City Council for electronic meetings.

Centerville City, in compliance with the Americans With Disabilities Act, provides accommodations and auxiliary communicative aids and services for all those citizens in need of assistance, including hearing devices. Persons requesting these accommodations for City-sponsored public meetings, services, programs, or events should call Blaine Lutz, Centerville Finance Director, at 295-3477, giving at least 24 hours notice prior to the meeting.

A notebook containing supporting materials for the business agenda items is available for public inspection and review at City Hall and will be available for review at the meeting. Upon request, a citizen may obtain (without charge) the City Manager's memo summarizing the agenda business, or may read this memo on the City's website: http://centerville.novusagenda.com/agendapublic.

Tentative Time: - The times shown below are tentative and are subject to change during the meeting.

5:30 Work Session - a) Continue discussion on master plans and funding for streets and water mains; and b) Discuss proposed revisions to Long-Term Sick Leave Policy

7:00 **A. ROLL CALL**

(See City Manager's Memo for summary of meeting business)

B. PLEDGE OF ALLEGIANCE

C. PRAYER OR THOUGHT

Steve Thacker

7:05 **D. OPEN SESSION (This item allows for the public to comment on any subject of municipal concern, including agenda items that are not scheduled for a public hearing. Citizens are encouraged to limit their comments to two (2) minutes per person. Citizens may request a time to speak during Open Session by calling the City Recorder's office at 295-3477, or may make such request at the beginning of Open Session.) Please state your name and city of residence.**

E. BUSINESS

7:10 1. Summary Action Calendar

a. Amendment No. 2 to Agreement with ACE Disposal for solid waste, recycling and green waste collection services
b. Fee Schedule Amendment regarding Green Waste Collection Services and Garbage Container Costs - Resolution No. 2016-09

7:10 2. Zone Map Amendment (Rezone) - 77 West Lund Lane from A-L (Agricultural-Low) to R-L (Residential-Low)

****Tabled from April 5, 2016**** Consider Zone Map Amendment (rezone) for approximately 4.85 acres of property located at approximately 77 West Lund Lane from Agricultural-Low (A-L) to Residential-Low (R-L) - Ordinance No. 2016-08

7:25 3. Award bid for street reconstruction and overlays to Advanced Paving in the amount of $410,977.53

7:40 4. Direction re County property on 100 South

8:00 5. Cost-sharing agreement with Maverik regarding Trailhead Improvements at 1250 West Parrish Lane

8:10 6. Municipal Code Amendments - Title 14 - Traffic Code

****Tabled from April 5, 2016**** Consider Ordinance No. 2016-10 amending various provisions of Title 14 of the Centerville Municipal Code regarding the Traffic Code

8:20 7. Municipal Code and Fee Schedule Amendments Regarding Franchise Application Fees

a. Consider Municipal Code Amendments enacting Section 11-01-057 regarding Franchise Application Fees - Ordinance No. 2016-11
b. Consider City Fee Schedule Amendments regarding Franchise Application Fees - Resolution No. 2016-10

8:30 8. Award bid for audit contract

8:40 9. Personnel Policies and Procedures - Amendments - Long-Term Sick Leave and All-Purpose Leave

Consider Resolution No. 2016-11 amending Section 4.150 of the Personnel Policies and Procedures regarding Long-Term Sick Leave and amending Section 4.140 of the same regarding All-Purpose Leave

8:50 10. Financial Report for period ending March 31, 2016

8:55 11. Mayor's Report

a. Fire Agency Report
b. UTOPIA/UIA financial reports

9:05 12. City Manager's Report

a. Parrish Lane/Pedestrian Bridge fencing project update
b. Schedule public hearing for Accessory Dwelling Unit ordinance

9:10 13. Minutes Review and Acceptance

March 23, 2016 joint work session (amended from 4-5-2016 meeting); April 5, 2016 work session, regular Council meeting and closed meeting minutes

9:15 14. Clarify goal-setting process outcome

9:45	15.	Miscellaneous Business a. ULCT Conference Report
9:55	16.	Closed meeting, if necessary, for reasons allowed by state law, including, but not limited to, the provisions of Section 52-4-205 of the Utah Open and Public Meetings Act, and for attorney-client matters that are privileged pursuant to Utah Code Ann. § 78B-1-137, as amended
9:55	17.	Possible action following closed meeting, including appointments to boards and committees
10:00	18.	Adjourn to RDA meeting

F. ADJOURNMENT

Items of Interest (i.e., newspaper articles, items not on agenda); Posted in-meeting information

Marsha L. Morrow, MMC
Centerville City Recorder

CENTERVILLE
CITY COUNCIL
Staff Backup Report
4/19/2016

Item No.

Short Title: Work Session - a) Continue discussion on master plans and funding for streets and water mains; and b) Discuss proposed revisions to Long-Term Sick Leave Policy

Initiated By: City staff

Scheduled Time: 5:30

SUBJECT

RECOMMENDATION

a. Discuss the five water rate scenarios in the attachment and give staff direction.

b. Discuss the recommendations relating to the Long-Term Sick Leave Policy and associated financial liability as explained in the staff report for item #9 in the regular Council meeting.

BACKGROUND

The City Manager is hopeful the City Council will not need the entire work session period to agree upon a water rate increase scenario. Therefore, the work session agenda shows the second topic of Long-Term Sick Leave Policy. This would allow the Council to discuss the second topic in a work session setting before considering action in their regular meeting.

Based on the Council's direction in an earlier work session, Blaine Lutz prepared the attached water rate analysis, which contains five scenarios: a big one-time increase; three multi-year increase scenarios; and a scenario that includes issuance of new debt. Staff have discussed these scenarios and appear to prefer one of the multi-year scenarios.

ATTACHMENTS:

Description

- Rate Analysis

Water Rates 2016 Financing Plan – Assessment

Objectives

- Analyze reasonable additional water rates charged for services to be able to finance the proposed construction of costs listed in capital project list 2016, prepared by the Public Works/ESI engineering, and ongoing repairs and upgrades of the system.
- Consider the cost of inflation of operating costs over the same time period.
- Propose varying scenarios for fee increases.

Rate Scenarios

- In general, a rate increase will need to approximate 30% over the next few years, with the exception of using debt financing. Below are several example scenarios of rate increases. Other combinations can easily be analyzed.
    - Scenario1: One time rate increase of 30%, no other increases.
    - Scenario2: First year increase of 25% with 2% increase over the subsequent 4 years.
    - Scenario 3: First year increase of 15%, 2nd year increase of 10%, and 3% increases in the subsequent 3 years.
    - Scenario 4: First year increase of 10%, 2nd and 3rd year increases of 10%, and 3% increases in subsequent years.
    - Scenario 5: debt financing. A $1.2 million bond issues in 2017 to cover construction costs for the 2018-2019 construction projects. Still the first year would require a 10% increase and 4% increases in subsequent years.

Assumptions

- Each scenario is intended to provide funding for the next 5 years.
- The analysis is based solely upon the capital project list created by the Public Works/ESI Engineering 2016. No analysis has been completed on the accuracy or reasonableness of the list in this report.
- The expenditure of new revenue is in accordance with the construction list 2016. Any change in expenditures annually may significantly affect the accuracy of the analysis.
- Costs of operation is based on the estimated cost for operation in FY 2016 and existing personnel.
- The cost of inflation for construction and/or operations can be analyzed on various amounts. A 3.0% inflation rate has been used for construction and 2.0% for operations for this analysis.
- Increases would be applied to all rates including base rates and per thousand consumption rates, beginning June 26, 2016 (July 2016 billing period).

Scenario #1

Assumptions	
$ 1,950,000	FY 2016 Revenue
30.00%	One time/first year percent increase
$ 2,535,000	Gross new revenue
3.00%	Construction list inflation
2.00%	Operation inflation
3.00%	Misc construction inflation

2016
Water Capital Facilities
Financing Plan

		Revenue	Projects per year	Inflated	Misc.	Total	Operating	Inflation	Revenue over Expenditure	Cash Flow
2016		$ 2,242,500	$ 50,000	$ 50,000	$ 150,000	$ 200,000	$ 1,800,000		$ 242,500	$ 242,500
2017	0.00%	$ 2,535,000	$ 175,000	$ 180,250	$ 150,000	$ 330,250	$ 1,836,000	$ 36,000	$ 332,750	$ 575,250
2018	0.00%	$ 2,535,000	$ 660,000	$ 679,800	$ 154,500	$ 834,300	$ 1,872,720	$ 36,720	$ (208,740)	$ 366,510
2019	0.00%	$ 2,535,000	$ 575,000	$ 592,250	$ 159,135	$ 751,385	$ 1,910,174	$ 37,454	$ (164,014)	$ 202,496
2020	0.00%	$ 2,535,000	$ 531,250	$ 547,188	$ 163,909	$ 711,097	$ 1,948,378	$ 38,203	$ (162,678)	$ 39,818

		Revenue	Projects per year	Inflated	Misc.	Total	Operating	Inflation	Revenue over Expenditure	Cash Flow
2021	0.00%	$ 2,535,000	$ 600,000	$ 600,000	$ 150,000	$ 750,000	$ 1,800,000		$ (15,000)	$ 24,818
2022	0.00%	$ 2,535,000	$ 475,000	$ 489,250	$ 150,000	$ 639,250	$ 1,836,000	$ 36,000	$ 23,750	$ 48,568
2023	0.00%	$ 2,535,000	$ 750,000	$ 772,500	$ 154,500	$ 927,000	$ 1,872,720	$ 36,720	$ (301,440)	$ (252,872)
2024	0.00%	$ 2,535,000	$ 632,500	$ 651,475	$ 159,135	$ 810,610	$ 1,910,174	$ 37,454	$ (223,239)	$ (476,111)
2025	0.00%	$ 2,535,000	$ 750,000	$ 772,500	$ 163,909	$ 936,409	$ 1,948,378	$ 38,203	$ (387,990)	$ (864,101)

Scenario #2

Assumptions	
$ 1,950,000	FY 2016 Revenue
25.00%	One time/first year percent increase
$ 2,437,500	Gross new revenue
3.00%	Construction list inflation
2.00%	Operation inflation
3.00%	Misc construction inflation

2016
Water Capital Facilities
Financing Plan

	Annual Increases	Revenue	Projects per year	Inflated	Misc.	Total	Operating	Inflation	Revenue over Expenditure	Cash Flow
2016		$ 2,193,750	$ 50,000	$ 50,000	$ 150,000	$ 200,000	$ 1,800,000		$ 193,750	$ 193,750
2017	2.00%	$ 2,486,250	$ 175,000	$ 180,250	$ 150,000	$ 330,250	$ 1,836,000	$ 36,000	$ 284,000	$ 477,750
2018	2.00%	$ 2,535,975	$ 660,000	$ 679,800	$ 154,500	$ 834,300	$ 1,872,720	$ 36,720	$ (207,765)	$ 269,985
2019	2.00%	$ 2,586,695	$ 575,000	$ 592,250	$ 159,135	$ 751,385	$ 1,910,174	$ 37,454	$ (112,319)	$ 157,666
2020	2.00%	$ 2,638,428	$ 531,250	$ 547,188	$ 163,909	$ 711,097	$ 1,948,378	$ 38,203	$ (59,250)	$ 98,416

	Annual Increases	Revenue	Projects per year	Inflated	Misc.	Total	Operating	Inflation	Revenue over Expenditure	Cash Flow
2021	0.00%	$ 2,638,428	$ 600,000	$ 600,000	$ 150,000	$ 750,000	$ 1,800,000		$ 88,428	$ 186,845
2022	0.00%	$ 2,638,428	$ 475,000	$ 489,250	$ 150,000	$ 639,250	$ 1,836,000	$ 36,000	$ 127,178	$ 314,023
2023	0.00%	$ 2,638,428	$ 750,000	$ 772,500	$ 154,500	$ 927,000	$ 1,872,720	$ 36,720	$ (198,012)	$ 116,011
2024	0.00%	$ 2,638,428	$ 632,500	$ 651,475	$ 159,135	$ 810,610	$ 1,910,174	$ 37,454	$ (119,810)	$ (3,799)
2025	0.00%	$ 2,638,428	$ 750,000	$ 772,500	$ 163,909	$ 936,409	$ 1,948,378	$ 38,203	$ (284,562)	$ (288,361)

Scenario #3

Assumptions	
$ 1,950,000	FY 2016 Revenue
15.00%	One time/first year percent increase
$ 2,242,500	Gross new revenue
3.00%	Construction list inflation
2.00%	Operation inflation
3.00%	Misc construction inflation

2016 Water Capital Facilities Financing Plan

		Revenue	Projects per year	Inflated	Misc.	Total	Operating	Inflation	Revenue over Expenditure	Cash Flow
2016		$ 2,096,250	$ 50,000	$ 50,000	$ 150,000	$ 200,000	$ 1,800,000		$ 96,250	$ 96,250
2017	10.00%	$ 2,466,750	$ 175,000	$ 180,250	$ 150,000	$ 330,250	$ 1,836,000	$ 36,000	$ 264,500	$ 360,750
2018	3.00%	$ 2,540,753	$ 660,000	$ 679,800	$ 154,500	$ 834,300	$ 1,872,720	$ 36,720	$ (202,988)	$ 157,763
2019	3.00%	$ 2,616,975	$ 575,000	$ 592,250	$ 159,135	$ 751,385	$ 1,910,174	$ 37,454	$ (82,039)	$ 75,724
2020	3.00%	$ 2,695,484	$ 531,250	$ 547,188	$ 163,909	$ 711,097	$ 1,948,378	$ 38,203	$ (2,194)	$ 73,530

		Revenue	Projects per year	Inflated	Misc.	Total	Operating	Inflation	Revenue over Expenditure	Cash Flow
2021	0.00%	$ 2,695,484	$ 600,000	$ 600,000	$ 150,000	$ 750,000	$ 1,800,000		$ 145,484	$ 219,015
2022	0.00%	$ 2,695,484	$ 475,000	$ 489,250	$ 150,000	$ 639,250	$ 1,836,000	$ 36,000	$ 184,234	$ 403,249
2023	0.00%	$ 2,695,484	$ 750,000	$ 772,500	$ 154,500	$ 927,000	$ 1,872,720	$ 36,720	$ (140,956)	$ 262,293
2024	0.00%	$ 2,695,484	$ 632,500	$ 651,475	$ 159,135	$ 810,610	$ 1,910,174	$ 37,454	$ (62,754)	$ 199,539
2025	0.00%	$ 2,695,484	$ 750,000	$ 772,500	$ 163,909	$ 936,409	$ 1,948,378	$ 38,203	$ (227,506)	$ (27,967)

Scenario #4

Assumptions	
$ 1,950,000	FY 2016 Revenue
10.00%	One time/first year percent increase
$ 2,145,000	Gross new revenue
3.00%	Construction list inflation
2.00%	Operation inflation
3.00%	Misc construction inflation

2016 Water Capital Facilities Financing Plan

		Revenue	Projects per year	Inflated	Misc.	Total	Operating	Inflation	Revenue over Expenditure	Cash Flow
2016		$ 2,047,500	$ 50,000	$ 50,000	$ 150,000	$ 200,000	$ 1,800,000		$ 47,500	$ 47,500
2017	10.00%	$ 2,359,500	$ 175,000	$ 180,250	$ 150,000	$ 330,250	$ 1,836,000	$ 36,000	$ 157,250	$ 204,750
2018	10.00%	$ 2,595,450	$ 660,000	$ 679,800	$ 154,500	$ 834,300	$ 1,872,720	$ 36,720	$ (148,290)	$ 56,460
2019	3.00%	$ 2,673,314	$ 575,000	$ 592,250	$ 159,135	$ 751,385	$ 1,910,174	$ 37,454	$ (25,700)	$ 30,760
2020	3.00%	$ 2,753,513	$ 531,250	$ 547,188	$ 163,909	$ 711,097	$ 1,948,378	$ 38,203	$ 55,835	$ 86,595

		Revenue	Projects per year	Inflated	Misc.	Total	Operating	Inflation	Revenue over Expenditure	Cash Flow
2021	0.00%	$ 2,753,513	$ 600,000	$ 600,000	$ 150,000	$ 750,000	$ 1,800,000		$ 203,513	$ 290,108
2022	0.00%	$ 2,753,513	$ 475,000	$ 489,250	$ 150,000	$ 639,250	$ 1,836,000	$ 36,000	$ 242,263	$ 532,370
2023	0.00%	$ 2,753,513	$ 750,000	$ 772,500	$ 154,500	$ 927,000	$ 1,872,720	$ 36,720	$ (82,927)	$ 449,443
2024	0.00%	$ 2,753,513	$ 632,500	$ 651,475	$ 159,135	$ 810,610	$ 1,910,174	$ 37,454	$ (4,726)	$ 444,717
2025	0.00%	$ 2,753,513	$ 750,000	$ 772,500	$ 163,909	$ 936,409	$ 1,948,378	$ 38,203	$ (169,478)	$ 275,240

Scenario #5

Assumptions	
$ 1,950,000	FY 2016 Revenue
10.00%	One time/first year percent increase
$ 2,145,000	Gross new revenue
3.00%	Construction list inflation
2.00%	Operation inflation
3.00%	Misc construction inflation

2016
Water Capital Facilities Financing Plan

		Revenue	Projects per year	Inflated	Misc.	Total	Operating	Inflation		Revenue over Expenditure	Bond Proceeds	Cash Flow
2016		$ 2,047,500	$ 50,000	$ 50,000	$ 150,000	$ 200,000	$ 1,800,000			$ 47,500		$ 47,500
2017	4.00%	$ 2,230,800	$ 175,000	$ 180,250	$ 150,000	$ 330,250	$ 1,836,000	$ 36,000		$ 28,550	$ 1,200,000	$ 1,276,050
2018	4.00%	$ 2,320,032	$ 660,000	$ 679,800	$ 154,500	$ 834,300	$ 1,872,720	$ 36,720	$ 88,000	$ (511,708)		$ 764,342
2019	4.00%	$ 2,412,833	$ 575,000	$ 592,250	$ 159,135	$ 751,385	$ 1,910,174	$ 37,454	$ 88,000	$ (374,181)		$ 390,161
2020	4.00%	$ 2,509,347	$ 531,250	$ 547,188	$ 163,909	$ 711,097	$ 1,948,378	$ 38,203	$ 88,000	$ (276,331)		$ 113,830

		Revenue	Projects per year	Inflated	Misc.	Total	Operating	Inflation		Revenue over Expenditure	Cash Flow
2021	0.00%	$ 2,509,347	$ 600,000	$ 600,000	$ 150,000	$ 750,000	$ 1,800,000		$ 73,000	$ (113,653)	$ 177
2022	0.00%	$ 2,509,347	$ 475,000	$ 489,250	$ 150,000	$ 639,250	$ 1,836,000	$ 36,000	$ 73,000	$ (38,903)	$ (38,727)
2023	0.00%	$ 2,509,347	$ 750,000	$ 772,500	$ 154,500	$ 927,000	$ 1,872,720	$ 36,720	$ 73,000	$ (363,373)	$ (402,100)
2024	0.00%	$ 2,509,347	$ 632,500	$ 651,475	$ 159,135	$ 810,610	$ 1,910,174	$ 37,454	$ 73,000	$ (284,438)	$ (686,538)
2025	0.00%	$ 2,509,347	$ 750,000	$ 772,500	$ 163,909	$ 936,409	$ 1,948,378	$ 38,203	$ 73,000	$ (448,440)	$ (1,134,978)

CENTERVILLE

Staff Backup Report
4/19/2016

Item No.

Short Title: (See City Manager's Memo for summary of meeting business)

Initiated By:

Scheduled Time:

SUBJECT

RECOMMENDATION

BACKGROUND

ATTACHMENTS:

Description

- City Manager Summary of April 19, 2016 Council Meetings

CENTERVILLE
CITY COUNCIL
Staff Backup Report
4/19/2016

Item No.

Short Title: Steve Thacker

Initiated By:

Scheduled Time:

SUBJECT

RECOMMENDATION

BACKGROUND

CENTERVILLE
CITY COUNCIL
Staff Backup Report
4/19/2016

Item No. 1.

Short Title: Summary Action Calendar

Initiated By:

Scheduled Time: 7:10

SUBJECT

a. Amendment No. 2 to Agreement with ACE Disposal for solid waste, recycling and green waste collection services
b. Fee Schedule Amendment regarding Green Waste Collection Services and Garbage Container Costs - Resolution No. 2016-09

RECOMMENDATION

a. Approve Amendment No. 2 to Agreement with ACE Disposal for solid waste, recycling and green waste collection services.
b. Approve Resolution No. 2016-09 amending City Fee Schedule regarding green waste collection services and container costs.

BACKGROUND

a. At their April 5 meeting the City Council agreed to extend the current waste collection contract with ACE Disposal for two years and directed staff to bring back the formal amendment to accomplish this.

b. The contract amendment in item "a" immediately above requires an amendment to the City Fee Schedule to increase the green waste collection service fee from $6.16 to $7.40 per month. The collection service fees for regular household garbage and recycling will not change. The Fee Schedule amendment also allows the City to charge a new customer the current actual cost of a regular garbage container or green waste container. The current Fee Schedule includes a $70 initial charge for a regular (i.e. black) garbage container, which does not cover the City's current cost of about $83 per container. When the City implemented the green waste collection service several years ago, the Waste District provided the green containers as an incentive for the City to implement that service; therefore, green waste customers did not have to pay for the container. However, the City is now buying green containers for new customers and should be recovering that cost from the new customers. The proposed wording will allow the actual cost of a black or green container to be recovered from the customer--as the cost fluctuates over time--rather than a fixed amount. The City's current cost for a green container is about $64.

ATTACHMENTS:

Description

- Amendment No. 2 to ACE Agreement
- Resolution No. 2016-09-Garbage Fees

AMENDMENT NO. 2 TO THE AMENDED SOLID WASTE, GREEN WASTE, AND RECYCLING COLLECTION AGREEMENT

This Amendment No. 2 to the Amended Solid Waste, Green Waste, and Recycling Collection Agreement is made and entered into the _____ day of April, 2016, by and between **CENTERVILLE CITY,** a municipal corporation of the State of Utah, whose address is 250 North Main Street, Centerville, Utah, 84014, hereinafter referred to as "City," and **ACE DISPOSAL, INC.,** a Utah corporation, whose local address is 2247 South Technology Drive, West Valley, Utah, 84119, hereinafter referred to as "Contractor."

WITNESSETH:

WHEREAS, Contractor is currently providing residential solid waste, green waste, and recycling and disposal services for the City pursuant to the Amended Solid Waste, Green Waste, and Recycling Collection Agreement entered into by the parties dated June 15, 2010, as amended by Amendment No. 1 to the Agreement entered into by the parties dated March 26, 2015 (collectively referred to as the "Agreement"); and

WHEREAS, the provisions of the Agreement permit the contract to be extended for up to two successive two (2) year terms upon mutual agreement of the City and the Contractor and upon such terms as the parties may deem appropriate; and

WHEREAS, the City and the Contractor desire to extend the Agreement for an additional two (2) year term upon the conditions as more particularly provided herein.

NOW, THEREFORE, in consideration of the mutual covenants contained herein and other good and valuable consideration, the receipt and sufficiency of which is hereby acknowledged, the parties hereby agree as follows.

Section 1. Term Extension. In accordance with the provisions of Section 2 of the Agreement, the term of the Agreement is hereby extended for an additional two-year term commencing on July 1, 2016, and continuing thereafter through the term of extension to July 1, 2018 ("Extension Term").

Section 2. Fee Schedule. The Fee Schedule set forth in Exhibit A to the Agreement is amended to read in its entirety as more particularly set forth in **Exhibit A** to this Amendment.

Section 3. Disposal Facility and Fees. Section 19 of the Agreement is amended to read in its entirety as follows:

> Section 19. Disposal Facility. All residential solid waste collected shall be hauled by the Contractor to the "Burn Plant" of the Wasatch Energy Systems, a Davis County Special Service District in Layton, Utah (hereinafter "District"), and/or the District's landfill facilities as required by regulations. The Contractor

shall become familiar with and shall be required to abide by all rules, regulations, laws, contracts, provisions, etc., related to the use of such disposal facilities. The City shall pay the required household disposal fees to the District for residential waste and the franchise (Davis County user fees) and tipping fees to the District for City facilities waste. Recyclable materials shall be taken to a designated and approved recycling facility as determined appropriate by the Contractor. Beginning on June 26, 2016, and during the term of this Extension Term, the parties shall equally share in the disposal costs and profits for recyclables as more particularly provided in **Exhibit A**. The Contractor shall bill or distribute to the City the costs/profits for recyclables on a monthly basis. The City reserves the right to request documentation from the Contractor evidencing costs/profits calculations. ~~The Contractor shall pay any and all required fees and costs associated with the disposal of residential recycling materials.~~ Green waste shall be taken to the District or the District's landfill facilities as required by regulations. The City shall pay the required household disposal fees to the District for Green waste and the franchise (Davis County user fees) and tipping fees to the District for City facilities waste.

Section 4. Fees. Section 28 of the Agreement regarding Fees is amended to read in its entirety as follows:

Section 28. Fees. The City shall pay Contractor for services provided under this Agreement in accordance with the Fee Schedule attached hereto as **Exhibit A,** and incorporated herein by this reference. Except as otherwise specifically provided herein, the parties expressly agree that the fees set forth in **Exhibit A** are intended to remain in place for the term or terms of the Agreement as more particularly described in Section 2. In the event the City determines to dispose of solid waste at another site, the fees set forth in **Exhibit A** shall be adjusted to reflect the actual costs of disposal, including any and all costs savings for using an alternative solid waste disposal site. The City shall not be required to pay a fuel surcharge for the collection and disposal of solid waste, green waste, or recyclable materials services provided during the Extension Term. The City shall not be required to pay any price or fee adjustments for increases in Contractor's cost of operations based on Consumer Price index or other indices during the Extension Term. ~~The fees for the collection and disposal of residential solid waste shall include a fuel surcharge or reduction in accordance with the fuel surcharge table set forth in **Exhibit "A."** There shall be no fuel surcharge imposed for the collection and disposal of residential green waste and recyclable materials during the term or terms of this Agreement. The Contractor's fees for collection and disposal services may be adjusted upward or downward to reflect changes in Contractor's cost of operations as indicated in the Consumer Price Index based on the following procedures and as mutually agreeable by the parties. On or before April 1 of each year of the Agreement, the City or the Contractor may request, in writing, a review and possible increase or decrease in solid waste collection fees. The adjusted fees will become effective July 1 of the subject year and remain in effect until further changed by mutual agreement as provided herein. The allowable costs that will be~~

~~considered in adjusting the solid waste collection fees will be those directly related to the operating of the collection services such as: labor costs; equipment operating costs; equipment maintenance costs; insurance costs; and surety costs. Financial information documenting actual costs and any information as requested by the City shall accompany any request for price adjustment by the Contractor. After review of the information submitted, the City Council will decide on a price adjustment to the solid waste collection fees and notify the Contractor of their decision. If the Contractor disagrees with their decision, the Contractor shall have fifteen (15) calendar days to notify the City in writing and request further review. After further consideration, the City Council shall issue a final decision concerning any price adjustment.~~

Section 5. The terms of this Amendment No. 2 are hereby incorporated as part of the Agreement. All other terms and conditions of the Agreement not modified by this Amendment No. 2 shall remain the same in full force and effect and are hereby ratified and affirmed. To the extent the terms of this Amendment No. 2 modify or conflict with any provisions of the Agreement, the terms of this Amendment No. 2 shall control.

Section 6. If any provision or part of this Amendment No. 2 is declared illegal, void or unenforceable for any reason, the other provisions and parts shall not be affected thereby, but shall remain in full force and effect.

Section 7. This Amendment No. 2 shall inure to the benefit of, and be binding upon, the parties hereto and their respective officers, employees, agents, successors in interest and assigns.

Section 8. This Amendment No. 2, and the terms and fees adopted herein, shall become effective on July 1, 2016.

IN WITNESS WHEREOF, the parties hereto have caused this Agreement to be executed the day and year first herein above written.

CENTERVILLE CITY

By:_____
Mayor Paul A. Cutler

ATTEST:

_____
Marsha L. Morrow, City Recorder

ACE DISPOSAL, INC.

By:_____

Its:_____

CONTRACTOR ACKNOWLEDGMENT

STATE OF _____)
:ss.
COUNTY OF _____)

On the _____day of _____, 2016, personally appeared before me _____ who being by me duly sworn, did say that he/she is the _____ of **ACE DISPOSAL, INC.**, and that the foregoing instrument was signed on behalf of said corporation by authority from its Board of Directors and acknowledged to me that said corporation executed the same.

_____
NOTARY PUBLIC

My Commission Expires:

_____

Residing at:

_____

Exhibit A
Amendment No. 2 to Agreement

Fee Schedule

Residential Monthly Solid Waste Collection:

Primary Container	Additional Container(s)
$4.41	$3.02

Residential Monthly Recyclable Materials Collection:

Primary Container	Additional Container(s)
~~$3.90~~ $3.15*	$1.91

* Plus a 50/50 cost and profit sharing for disposal of recyclables. City and Ace will pay 50% each for any tipping fees and contamination charges. Any profits from disposal shall also be shared 50/50%.

Green Waste Collection:

Primary Container	Additional Container(s)
~~$2.91~~ $4.13	$4.13

Spring/Fall Cleanup (Subscription Basis)

Per Load
$20.13

RESOLUTION NO. 2016-09

A RESOLUTION AMENDING THE CENTERVILLE CITY FEE SCHEDULE REGARDING GREEN WASTE COLLECTION SERVICES AND SOLID WASTE CONTAINER COSTS

WHEREAS, the City Council has determined that it is in the best interest of the residents of Centerville City to provide curbside solid waste, green waste and recycling collection services within the City; and

WHEREAS, the City contracts with a contractor to provide curbside solid waste, green waste and recycling collection services to residents of Centerville City; and

WHEREAS, the City Council desires to amend the City Fee Schedule regarding fees for green waste collection services and fees for containers as more particularly set forth herein; and

WHEREAS, the City Council has determined that the amendments to the City Fee Schedule regarding green waste collection services and container fees are reasonable and in the best interest of the public to provide for the protection of the public's health, safety and welfare, to encourage the diversion and/or recovery of green waste and recycling materials from the waste stream, and to cover contractual and administrative costs incurred by the City for providing such services and containers.

NOW THEREFORE, IT IS HEREBY RESOLVED BY THE CITY COUNCIL OF CENTERVILLE, UTAH, AS FOLLOWS:

Section 1. Amendment. The City Council amends Section V.C. of the Centerville City Fee Schedule regarding Garbage Collection Fees as more particularly set forth in **Exhibit A,** attached hereto and incorporated herein by this reference.

Section 2. Severability. If any section, clause or portion of this Resolution is declared invalid by a court of competent jurisdiction, the remainder shall not be affected thereby and shall remain in full force and effect.

Section 3. Effective Date. This Resolution shall become effective immediately, including the initial fees for containers. The monthly fees for green waste collection services shall be effective starting on June 26, 2016.

PASSED AND ADOPTED BY THE CITY COUNCIL OF CENTERVILLE CITY, STATE OF UTAH, ON THIS 19th DAY OF APRIL, 2016.

CENTERVILLE CITY

By: _____
Mayor Paul A. Cutler

ATTEST:

_____
City Recorder, Marsha L. Morrow

CERTIFICATE OF PASSAGE AND EFFECTIVE DATE

According to the provisions of the U.C.A. § 10-3-719, as amended, resolutions may become effective without publication or posting and may take effect on passage or at a later date as the governing body may determine; provided, resolutions may not become effective more than three months from the date of passage. I, the municipal recorder of Centerville City, hereby certify that foregoing resolution was duly passed by the City Council and became effective upon passage or a later date as the governing body directed as more particularly set forth below.

_____ DATE: _____
MARSHA L. MORROW, City Recorder

EFFECTIVE DATE: ____ day of _____, 20_____.

EXHIBIT A
To Resolution No. 2016-09

SOLID WASTE, GREEN WASTE AND RECYCLING COLLECTION FEES

V. Utilities.

* * *

C. **GARBAGE**

Garbage Service Monthly Fee Schedule

Solid Waste, Green Waste, and Recycling Services
Monthly Fee Schedule

Schedule A

	Number of Containers	**Total Monthly Fee**
1.	Solid Waste Collection Service Fee	
	1	$12.15
	Each Additional	$ 9.45
2.	Recycling Collection Service Fee	
	1	$ 3.95
	Each Additional	$ 2.05
3.	Green Waste Collection Service	
	1	~~$6.16~~ $ 7.40
	Each Additional	~~$6.16~~ $ 7.40

4. Solid Waste Container Cost. All new residents applying for solid waste collection services will be required to pay to the City in advance the then current rate and actual City cost for ~~$70.00 for~~ a primary residential container. This container cost is considered a lease and shall be nonrefundable and nontransferable.

5. Additional Solid Waste Container Cost. Residents applying for an additional solid waste containers will be required to pay to the City in advance the then current rate and actual City cost for the additional residential container. ~~the initial $70.00 per container fee in advance.~~ This additional container cost is considered a lease and shall be nonrefundable and nontransferable except as otherwise specifically provided in Section 9. Residents may suspend service for additional containers after a minimum of two (2) calendar months. Residents that ~~may~~ request to reinstate service for an additional containers within twenty-four months

from the date of suspension of service ~~and~~ will not be required to pay the additional container lease cost again, but will be required to pay a $10.00 reinstatement fee.

~~All solid waste containers rented from the City shall be rented on the same schedule that is on Schedule A.~~

6. Recycling Container Cost. Recyclable materials containers shall be supplied by the City's contractor at no cost to the residents.

7. Green Waste Container Cost. All new residents applying for collection services will be required to pay to the City in advance the then current rate and actual City cost for a green waste container. This container cost is considered a lease and shall be nonrefundable and nontransferable except as otherwise specifically provided in Section 9.

8. Additional Green Waste Container. Residents applying for an additional green waste container will be required to pay to the City in advance the then current rate and actual City cost for the additional green waste container. This additional container cost is considered a lease and shall be nonrefundable and nontransferable except as otherwise specifically provided in Section 9. Residents may suspend service for additional green waste containers after a minimum of two (2) calendar months. ~~Green Waste containers shall be provided by the City. Residents may suspend service for additional containers after a minimum of six (6) calendar months.~~ Residents that request to ~~may~~ reinstate service for an additional green waste containers within twenty-four months from the date of suspension of service will not be required to pay the additional container lease cost again, but ~~and~~ will be required to pay a $10.00 reinstatement fee.

9. Billing Status of Residence. Primary solid waste containers and recycling containers shall remain with the billing location and cannot be transferred to new location or billing address. Additional solid waste containers and primary and additional green waste containers may be transferred to a new location and billing address in the City with prior approval of the City Finance Department and authorized transfer of billing status. ~~The billing status of each residence will not change as the occupancy thereof changes, i.e., the solid waste or recyclable materials container with its billing status will remain with the residence as originally established. Adjustments between occupants of residences covering prepayment of container rental shall be the responsibility of said occupants.~~

9. Ownership of Cans. Nothing herein contained, including payment of the lease ~~rental~~ sums herein specified, shall affect title to ~~said~~ the containers, which ownership shall at all times remain with the City and/or the City's contractor, as applicable.

CENTERVILLE
CITY COUNCIL
Staff Backup Report
4/19/2016

Item No. 2.

Short Title: Zone Map Amendment (Rezone) - 77 West Lund Lane from A-L (Agricultural-Low) to R-L (Residential-Low)

Initiated By: Phil Holland, Wright Development Group, Applicant

Scheduled Time: 7:10

SUBJECT

****Tabled from April 5, 2016**** Consider Zone Map Amendment (rezone) for approximately 4.85 acres of property located at approximately 77 West Lund Lane from Agricultural-Low (A-L) to Residential-Low (R-L) - Ordinance No. 2016-08

RECOMMENDATION

Adopt Ordinance No. 2016-08 amending the Centerville City Zoning Map by changing the zoning of approximately 4.85 acres of real property located at 77 West Lund Lane from Agricultural-Low (A-L) to Residential-Low (R-L) based on the findings and recommendation of the Planning Commission.

BACKGROUND

On March 23, 2016, the Planning Commission reviewed and recommended for approval the proposed rezone of approximately 4.85 acres of property located at 77 West Lund Lane from Agricultural-Low (A-L) to Residential-Low (R-L). The Staff Transmittal Report for this application is attached. On April 5, 2016, the City Council held a public hearing on the proposed rezone and after discussion of the matter, tabled action on the rezone to the next meeting on April 19, 2016. This matter is now before the City Council for further discussion and action.

As discussed at the last meeting, a copy of Section 12-21-080 of the City Zoning Code is attached regarding Zoning Map and Text Amendments (including the approval standards for rezone decisions as set forth in Subsection (e)) and Section 12-21-060 regarding General Decision-Making Standards (including legislative proceedings set forth in Subsection (a)). Also attached is a copy of the City Attorney prepared handout regarding rezones and the Section 12-480-5 of the Centerville General Plan regarding Neighborhood 4, Northwest. More information regarding approval standards for rezone decisions and provisions of the General Plan is detailed in the Staff Report to the Planning Commission dated March 23, 2016, as attached.

ATTACHMENTS:

Description

- Transmittal Report for 4-5-2016 CC Meeting-Lund Lane Rezone
- Zoning Map - Surrounding Area
- Ordinance No. 2016-08-Manor Rezone
- Zoning Code Excerpts
- Blue Sheet Handout-Rezones
- General Plan-Section 12-480-5

- 03-23-2016 PC Staff Report The Manor at Lund Lane
- Conceptual Subdivision Plan for The Manor at Lund Lane
- 3-23-2016 PC minutes re Lund Lane Rezone

CENTERVILLE CITY
COMMUNITY DEVELOPMENT DEPARTMENT

655 North 1250 West, Centerville, Utah 84014
(801) 292-8232

STAFF TRANMITTAL REPORT

PROPERTY OWNER:	**ROBERT AND SHARLENE HAWKES** **77 WEST LUND LANE** **CENTERVILLE, UT 84014**
APPLICANT:	**PHIL HOLLAND** **WRIGHT DEVELOPMENT GROUP** **1178 WEST LEGACY CROSSING #100** **CENTERVILLE, UT 84014**
EMAIL ADDRESS:	**PHIL@WRIGHTDEVELOPMENTGROUP.NET**
PROPERTY:	**77 WEST LUND LANE** ***"THE MANOR AT LUND LANE"***
ACREAGE:	**4.85**
TOTAL LOTS:	**12 LOTS**
CURRENT ZONING:	**AGRICULTURAL-LOW (A-L)**
APPLICATION:	**ZONE MAP AMENDMENT, REZONE FROM AGRICULTURAL-LOW (A-L) TO RESIDENTIAL-LOW (R-L)**
RECOMMENDATION:	**PLANNING COMMISSION RECOMMENDS THE REZONE REQUEST**

BACKGROUND

The Hawkes Family, who own the property located at 77 West Lund Lane, desire to develop their land into a subdivision and have chosen Wright Development to pursue this plan. Phil Holland with Wright Development is requesting a rezone of the property from Agricultural-Low (A-L) to Residential-Low (R-L) and divide the parcel into 12 individual lots. With the total size being 4.85 acres, the average density for the project would be 2.47 units per acre. This would be an allowable density, since an R-L Zone allows up to four (4) units per acre.

PLANNING COMMISSION RECOMMENDATION

On March 23, 2015, the Planning Commission held a public hearing, discussed the matter, and then forwarded to the City a **recommendation of *APPROVAL*** of the proposed rezone, as follows.

"Rezone Parcel the property located at 77 West Lund Lane from Agricultural-Low (A-L) to Residential-Low (R-L)"

Suggested Reasons for the Action (Findings):

a. The proposed amendment meets the requirements found in Section 12-21-080(4)(e).
b. The proposed Zone Map Amendment meets the goals and objectives of the General Plan concerning Neighborhood 4 [Section 12-480-5].
c. Adequate facilities are located within the subject property along Lund Lane [Section 12-21-080(e)(5)].
d. Any further conceptual plat acceptance by the Planning Commission is subject to approval of the rezone by the City Council.

Planning Commission Vote (6-1):

Commissioner	Yes	No	Not Present
Hirschi (Chair)	X		
Hirst	X		
Johnson	X		
Kjar	X		
Daley	X		
Hayman	X		
Wright		X	

LIST OF PREVIOUS PLANNING COMMISSION MEETINGS

✓ *March 23, 2016 Regular Meeting of the Planning Commission*

Centerville City Zoning Map

Hawkes Rezone – Manor at Lund Lane – Surrounding Area

Subject Property

ORDINANCE NO. 2016-08

AN ORDINANCE AMENDING THE CENTERVILLE CITY ZONING MAP BY CHANGING THE ZONING OF APPROXIMATELY 4.85 ACRES OF CERTAIN REAL PROPERTY LOCATED AT 77 WEST LUND LANE FROM AGRICULTURAL-LOW (A-L) TO RESIDENTIAL-LOW (R-L)

WHEREAS, the City is authorized to enact a zoning map consistent with the purposes set forth in the Utah Land Use Development and Management Act, as more particularly provided in *Utah Code Ann.* §§ 10-9a-101, *et seq.*, as amended, and the City is further authorized to make amendments to such zoning map in accordance with procedures set forth in *Utah Code Ann.* § 10-9a-503, as amended; and

WHEREAS, in accordance with applicable provisions of Utah law and the goals of the Centerville City General Plan for the subject property as set forth in Section 12-480-5, Neighborhood 4, Northwest Centerville, the City Council desires to amend the Centerville City Zoning Map to rezone the subject property from Agricultural-Low (A-L) to Residential-Low (R-L) as more particularly provided herein; and

WHEREAS, the proposed amendments to the Centerville City Zoning Map as set forth herein have been reviewed by the Planning Commission and the City Council and all appropriate public noticing and hearings have been provided and held in accordance with Utah law to obtain public input regarding the proposed revisions to the City Zoning Map.

NOW, THEREFORE, BE IT ORDAINED BY THE CITY COUNCIL OF CENTERVILLE CITY, STATE OF UTAH, AS FOLLOWS:

Section 1. **Zone Map Amendment.** The real property located at approximately 77 West Lund Lane in Centerville City consisting of approximately 4.85 acres, as more particularly described in **Exhibit A**, attached hereto and incorporated herein by this reference, is hereby rezoned from Agricultural-Low (A-L) to Residential-Low (R-L) and the Centerville City Zoning Map is correspondingly amended as described herein.

Section 2. **Findings**. The rezone of the subject property to Residential-Low (R-L) and corresponding amendment to the Centerville City Zoning Map is based on the following findings:

1. The City Council finds that the proposed zoning change meets the requirements found in Section 12-21-080(e) of the Zoning Ordinance.
2. The City Council finds that the proposed zoning change is consistent with the goals and objectives of the General Plan concerning Neighborhood 4 - Section 12-480-5.
3. The City Council finds the proposed zoning change is harmonious with the overall character of existing development in the vicinity.
4. The City Council finds no adverse effects will occur to the immediate area with the approval of the rezone and that there are adequate facilities and services to serve the property along Lund Lane.

Section 3. **Severability**. If any section, part or provision of this Ordinance is held invalid or unenforceable by a court of competent jurisdiction, such invalidity or unenforceability shall not affect any other portion of this Ordinance, and all sections, parts and provisions of this Ordinance shall be severable.

Section 4. **Effective Date.** This Ordinance shall become effective upon publication or posting, or thirty (30) days after passage, whichever occurs first.

PASSED AND ADOPTED BY THE CITY COUNCIL OF CENTERVILLE CITY, STATE OF UTAH, THIS 5th DAY OF APRIL, 2016.

ATTEST: **CENTERVILLE CITY**

_____ By: _____

Marsha L. Morrow, City Recorder Mayor Paul A Cutler

Voting by the City Council:

	"AYE"	"NAY"
Councilmember Fillmore	_____	_____
Councilmember Ince	_____	_____
Councilmember Ivie	_____	_____
Councilmember McEwan	_____	_____
Councilmember Mecham	_____	_____

CERTIFICATE OF PASSAGE AND PUBLICATION OR POSTING

According to the provisions of the U.C.A. § 10-3-713, as amended, I, the municipal recorder of Centerville City, hereby certify that foregoing ordinance was duly passed by the City Council and published, or posted at: (1) 250 North Main; (2) 655 North 1250 West; and (3) RB's Gas Station, on the foregoing referenced dates.

_____ DATE: _____

MARSHA L. MORROW, City Recorder

RECORDED this ____ day of _____, 2016.

PUBLISHED OR POSTED this ____ of _____, 2016.

EXHIBIT A

Property Description

77 West Lund Lane, Centerville, Utah 84014

Parcel No. 07-070-0070

BEG ON THE W R/W LINE OF HWY 106 AT A PT N 0^15'20" E 184.07 FT ALG A 1/4 SEC LINE & S 89^13'20" W 248.60 FT FR THE CENTER OF SEC 31-T3N-R1E, SLM; TH S 89^13'20" W 1152.16 FT TO AN EXIST FENCE; TH ALG SD FENCE N 13^00' W 198.26 FT TO THE S R/W LINE OF LUND LANE; TH ALG SD R/W S 89^33'40" E 939.80 FT; TH S 0^26'20" W 157.61 FT; TH S 89^38'25" E 138.10 FT; TH N 0^26'20" E 157.62 FT; TH S 89^33'40" E 103.26 FT TO THE W R/W LINE OF HWY 106; TH SE'LY 81.27 FT ALG THE ARC OF A 5762.65 FT RAD CURVE TO THE LEFT (LC= S 4^57'45" E 81.27 FT) ALG SD R/W LINE; TH S 5^22' E 41.80 FT ALG SD R/W LINE; TH SE'LY 46.14 FT ALG THE ARC OF A 3852.80 FT RAD CURVE TO THE LEFT (LC= S 5^42'35" E 46.14 FT) ALG SD R/W LINE TO THE POB. CONT. 4.53 ACRES.

and

Parcel No. 07-070-0071

BEG AT A PT ON THE S LINE OF A STR SD PT BEING N 0^15'20" E 347.61 FT ALG THE 1/4 SEC LINE & N 89^33'40" W 364.84 FT FR THE CENTER OF SEC 31-T3N-R1E, SLM; & RUN TH S 0^26'20" W 157.62 FT; TH N 89^38'25" W 138.10 FT; TH N 0^26'20" E 157.61 FT TO SD S STR LINE; TH S 89^33'40" E 138.10 FT TO THE POB. CONT. 0.50 ACRES.

(f) *Appeal.* Any person adversely affected by a final decision of the City Council to amend the General Plan may appeal that decision to the district court as provided in *Utah Code Ann.* § 10-9a-801, as amended.

(g) *Effect of Approval.* Approval of an application to amend the General Plan shall not be deemed an approval of any zone, conditional use permit, site plan, or other permit. Approval of a particular zone or permit shall be obtained in accordance with applicable provisions of this Title.

(h) *Effect of Disapproval.* City Council denial of an application to amend the General Plan shall preclude a person from filing of another application covering substantially the same subject or property, or any portion thereof, for six (6) months from the date of the disapproval. This section shall not limit the City Council, Planning Commission, or authorized City staff from initiating a General Plan amendment at any time.

12-21-080. Zoning Map and Text Amendments.

(a) *Purpose.* The City Council has previously adopted the Centerville City Zoning Map and the Zoning Ordinance as more particularly provided in this Title. This section sets forth procedures for amending the Zoning Map and the provisions of this Title. For purposes of this Section, amendment shall include the addition of new sections, chapters or provisions to the Zoning Ordinance and any comprehensive revisions to or adoption of the same or the Zoning Map.

(b) *Authority.* The City Council may from time to time amend the text of this Title and the zoning map as provided in this section. Amendments may include changes in the number, shape, boundaries, or area of any zone, zone regulations, or any other provision of this Title. The provisions set forth herein shall not apply to temporary zoning regulations which may be enacted without public hearing in accordance with Section 12-21-210 of this Chapter.

(c) *Initiation.* Proposed amendments to the text of this Title and the zoning map may be initiated by the City Council, Planning Commission, or a property owner affected by a proposed amendment as provided in this section. An agent of a property owner shall provide an affidavit of authorization.

(d) *Procedure.* Zoning text and map amendments shall be considered and processed as provided in this subsection.

(1) An application shall be submitted to the Zoning Administrator in a form established by the Administrator along with any fee established by the City's schedule of fees. The application shall include at least the following information:

(A) The name, address and telephone number of the applicant and the applicant's agent, if any;

(B) The name and address of every person or company the applicant represents;

The requested amendment and reasons supporting the request; and

(D) If the proposed amendment requires a change in the zoning map, the application shall include:

(i) An accurate property map showing present and proposed zoning classifications;

(ii) All abutting properties showing present zoning classifications; and

(iii) An accurate legal description and an approximate common address of the area proposed to be rezoned.

(E) If the proposed amendment requires a change in the text of this Title, the application shall include chapter and section references and a draft of the proposed text.

(2) After an application is determined to be complete, the Zoning Administrator shall prepare a staff report evaluating the application.

(3) The Planning Commission shall schedule and hold a public hearing on the proposed amendment. Public notice of the public hearing and the public meeting shall be provided in accordance with the provisions of Section 12-21-050. The public hearing before the Planning Commission shall be deemed the first public hearing on the application subject to noticing requirements as set forth in Section 12-21-050(c)(2). Prior to the public hearing regarding any zoning map amendment, the Planning Commission shall consider each written objection filed in accordance with Utah Code Ann. § 10-9a-

502, as amended. After the public hearing, the Planning Commission shall review the application and thereafter submit its recommendation for approval, approval with modifications, or denial thereof to the City Council. The Planning Commission shall forward to the City Council all objections to a zoning map amendment filed in accordance with Utah Code Ann. § 10-9a-502, as amended.

(4) Following receipt of a recommendation from the Planning Commission, the City Council shall schedule and hold a public hearing on the application. Public notice of the public hearing and the public meeting shall be provided in accordance with the provisions of Section 12-21-050. The public hearing before the City Council shall be deemed an additional or subsequent public hearing on the application subject to noticing requirements as set forth in Section 12-21-050(c)(3). Following a public hearing and after due consideration the City Council may approve, approve with modifications, or deny the proposed amendment.

(e) *Approval Standards.* A decision to amend the text of this Title or the zoning map is a matter within the legislative discretion of the City Council as described in Section 12-21-060(a) of this Chapter. In making an amendment, the following factors should be considered:

(1) Whether the proposed text or map amendment is consistent with goals, objectives and policies of the City's General Plan;

(2) Whether the proposed map amendment is harmonious with the overall character of existing development in the vicinity of the subject property;

(3) The extent to which the proposed map amendment may adversely affect adjacent property; and

(4) For proposed map amendments, the adequacy of facilities and services intended to serve the subject property, including, but not limited to, roadways, parks and recreation facilities, police and fire protection, schools, stormwater drainage systems, water supplies, and waste water and refuse collection.

(f) *Appeal.* Any person adversely affected by a final decision of the City Council to amend the text of this Title or the zoning map may appeal that decision to the district court as provided in *Utah Code Ann.* § 10-9a-801, as amended.

(g) *Effect of Approval.* Approval of an application to amend the provisions of this Title or the zoning map shall not be deemed an approval of any conditional use permit, site plan or other permit. Approval of such permits shall be obtained in accordance with applicable provisions of this Title and other applicable provisions of the Centerville City Code.

(h) *Effect of Disapproval.* City Council denial of an application to amend the provisions of this Title or the zoning map shall preclude the filing of another application covering substantially the same subject or property, or any portion thereof, for six (6) months from the date of the disapproval, except as follows:

(1) Another application may be sooner considered if:

(A) The Planning Commission determines a substantial change in circumstances has occurred to merit consideration of the application; or

(B) The application is for a change to a different zone.

(2) The City Council or Planning Commission may propose any text or zoning map amendment at any time.

12-21-090. Permitted Use Review.

(a) *Purpose.* This section sets forth procedures for reviewing permitted uses in all zones to determine compliance with applicable requirements of this Title.

(b) *Authority.* The Zoning Administrator is authorized to review and approve applications for permitted uses in all zones as set forth in this section.

(c) *Initiation.* A property owner or a lessee may request a permitted use review as provided in this section. An agent or lessee of a property owner shall provide an affidavit of authorization.

(d) *Procedure.* Permitted use applications shall be considered and processed as provided in this subsection.

(1) A complete application shall be submitted to the Zoning Administrator in a form established by the Administrator along with any fee established by

date of the hearing or meeting for which notice was given, the notice shall be considered adequate and proper.

(h) *Examination of Application.* Upon reasonable request during normal business hours, any person may examine an application and materials submitted in support of or in opposition to an application in accordance with the Government Records Access Management Act, *Utah Code Ann.*, §§ 63G-2-101, *et seq.*, as amended. Copies of such materials shall be made available at reasonable cost in accordance with the City's fee schedule.

(i) *Public Hearing and Meeting Procedures.* An application shall be considered pursuant to policies and procedures established by the decision-making body or official for the conduct of its meetings.

(j) *Withdrawal of Application.* An applicant may withdraw an application at any time prior to action on the application by the decision-making body or official. Application fees shall not be refundable if prior to withdrawal:

(1) A staff review of the application has been undertaken; or

(2) Notice for a public hearing or meeting on the application has been mailed, posted or published.

(k) *Record of Public Hearing or Meeting.*

(1) Except as provided by law, written minutes and a recording shall be kept of all open meetings. Written minutes of an open meeting shall include:

(i) The date, time, and place of the meeting;

(ii) The names of members present and absent;

(iii) The substance of all matters proposed, discussed, or decided, and a record, by individual member, of votes taken;

(iv) The names of each person who provides testimony or comments to the public body and the substance in brief of their testimony or comments; and

(v) Any other information that is a record of the proceedings of the meeting that any member requests be entered in the minutes or recording.

(2) The minutes, recordings, all applications, exhibits, papers and reports submitted in any proceeding before the decision-making body or official, and the decision of the decision-making body or official, shall constitute the record thereof. The record shall be made available for public examination as provided in Section 12-21-050(h) of this section.

(l) *Final Action Notification.* Notice of any final action or decision on a pending application by the decision-making body or official shall be provided to an applicant within a reasonable time. Such notice shall be provided by mail, email or other electronic means to the designated contact and mailing address or email address provided by the applicant in accordance with Section 12-21-040.

12-21-060. General Decision-Making Standards.

The decision-making standards set forth in this section are based on the fundamental distinction between legislative and administrative proceedings: legislative proceedings establish public law and policy which is applicable generally, while administrative proceedings apply such law and policy to factually distinct, individual circumstances.

(a) *Legislative Proceedings.*

(1) The following types of applications are hereby declared to be legislative proceedings:

(A) General Plan adoption or amendment;

(B) Zoning map adoption or amendment;

(C) Land use ordinance text adoption or amendment; and

(D) Temporary regulations.

(2) Decisions regarding a legislative application shall be based on the "reasonably debatable" standard, as follows:

(A) The decision-making authority shall determine what action, in its judgment, will reasonably promote the public interest, conserve the values of other properties, avoid incompatible development, encourage appropriate use and development, and promote the general welfare.

(B) In making such determination, the decision-making authority may consider the following:

(i) Testimony presented at a public hearing or meeting; and

(ii) Personal knowledge of various conditions and activities bearing on the issue at hand, including, but not limited to, the location of businesses, schools, roads and traffic conditions; growth in population and housing; the capacity of utilities; the zoning of surrounding property; and the effect that a particular proposal may have on such conditions and activities, the values of other properties, and upon the general orderly development of the City.

(C) The decision-making body should state on the record the basis for its decision.

(b) *Administrative Proceedings.*

(1) The following types of applications are hereby declared to be administrative proceedings:

(A) Permitted use review;

(B) Conditional use permit;

(C) Site plan review;

(D) Special exception;

(E) Variance;

(F) Building permit;

(G) Nonconformity;

(H) Sign permit;

(I) Temporary use permit;

(J) Routine and uncontested matter;

(K) Administrative interpretation; and

(L) Appeal of administrative decision.

(2) Decisions regarding an administrative application shall be based on the "substantial evidence" standard including at least the following:

(A) A statement of the standards for approval applicable to the application;

(B) A summary of evidence presented to the decision-making body or official;

(C) A statement of findings of fact or other factors considered, including the basis upon which such facts were determined and specific references to applicable standards set forth in this Title or other provisions of the Centerville City Code; and

(D) A statement of approval, approval with conditions, or disapproval, as the case may be.

12-21-070. General Plan Amendment.

(a) *Purpose.* The City Council has previously adopted the Centerville City General Plan. This section sets forth procedures for amending the Centerville City General Plan. For purposes of this Section, amendment shall include the addition of new elements to the General Plan and any comprehensive revisions to or adoption of the same.

(b) *Authority.* The City Council may from time to time amend the General Plan as provided in this section. Such amendments may include any matter within the scope of the General Plan as provided in Section 12-11-030 of this Title.

(c) *Initiation.* Proposed amendments to the General Plan may be initiated by any person, the City Council, Planning Commission, or authorized City staff as provided in this section.

(d) *Procedure.* General Plan amendments shall be considered and processed as provided in this subsection.

(1) An application shall be submitted to the Zoning Administrator in a form established by the Administrator along with any fee established by the City's schedule of fees. The City Council, Planning Commission, or authorized City staff may initiate a General Plan amendment at any time without submittal of an application or payment of any fee.

(2) A person proposing General Plan amendments shall do the survey and analysis work necessary to justify the proposed amendment. To ensure the Planning Commission and City Council have sufficient information to evaluate a proposed

CENTERVILLE CITY ATTORNEY'S OFFICE

250 North Main Street
Centerville, Utah 84014
801.335.8842

ZONING MAP AMENDMENTS (REZONES)

CITY COUNCIL DECISION-MAKING PROCEDURES AND FACTORS

1. Authority.

The City has adopted a Zoning Map and has zoned property within the City into various zoning districts. When reviewing an application for zoning map amendment, also known as a "rezone," the City Council is governed by applicable provisions of State law and City Ordinances. Under *Utah Code Ann.* § 10-9a-503, the City Council is authorized to amend the number, shape, boundaries, or area of any zoning district.

2. Procedures – Public Hearing Required.

Zone map amendments must follow the procedures specified in *Utah Code Ann.* § 10-9a-502 and *City Ordinance* § 12-21-080 which require review and recommendation from the Planning Commission prior to consideration of any zoning map amendment by the Council. The Planning Commission is required by statute to provide notice and hold a public hearing on all proposed zoning map amendments and to forward its recommendation regarding the same to the Council. Although not required by statute, the City Council is required by ordinance to provide notice and hold a public hearing on proposed zoning map amendments. After receiving a recommendation from the Planning Commission and holding a public hearing on the matter, the Council may thereafter approve, approve with modifications, or deny the proposed zoning map amendment.

3. Decision-Making Factors.

In making a decision regarding a zoning map amendment, the Council should consider the following factors set forth in Section 12-21-080:

a. Whether the proposed amendment is consistent with the goals, objectives and policies of the City's General Plan;

b. Whether the proposed amendment is harmonious with the overall character of existing development in the vicinity of the subject property;

c. The extent to which the proposed amendment may adversely affect adjacent property; and

d. The adequacy of facilities and services intended to serve the subject property, including, but not limited to, roadways, parks and recreation facilities, police and fire protection, schools, stormwater drainage systems, water supplies, and waste water and refuse collection.

4. Legislative Decision – Reasonably Debatable Standard.

The Council's review of a zoning map amendment is a legislative decision, meaning such decision establishes public law and policy as opposed to an administrative decision that merely implements such policies or applies them to factually distinct and individual circumstances. As a legislative decision, the Council's decision is subject to the highly deferential "reasonably debatable" standard. Under the reasonably debatable standard, it must be reasonably debatable that the Council's decision promotes the public interest and general welfare. A reviewing court will ask whether the Council's decision to grant or deny a rezone is in the interest of the general welfare. The courts have also recognized under the reasonably debatable standard that public hearings and citizen comments are a legitimate source of information for the Council to consider in making legislative decisions.

5. Appeal.

Any person adversely affected by a final decision of the City Council regarding a zoning map amendment may appeal that decision to the District Court by filing a petition for review pursuant to *Utah Code Ann.* § 10-9a-801, as amended. Such petition for review must be filed within 30 days after the Council's decision is final. Alternatively, a person adversely affected by a final decision of the Council regarding a rezone may file a complaint against the City which may include a variety of claims, including constitutional claims of due process or equal protection. A property owner may also file a request for arbitration of a constitutional taking issue with the Property Rights Ombudsman under *Utah Code Ann.* § 13-43-204. On a petition for review to the District Court under Section 10-9a-801, the court shall:

a. Presume that a decision made under the land use statutes is valid;

b. Determine only whether or not the decision is arbitrary, capricious, or illegal;

c. In reviewing a decision involving the exercise of legislative discretion, consider such decision valid if it is reasonably debatable that the decision promotes the purposes of the land use statutes and is not otherwise illegal; and

d. In determining whether a decision is illegal, consider whether the decision violates a law, statute, or ordinance in effect at the time the decision was made.

1. Residential Policies

Northeast Centerville has probably the most homogeneous land uses of all of Centerville's neighborhoods, with primarily low density single-family residential development.

a. To maintain compatibility with the style of development presently existing in this area, all future residential development in northeast Centerville should be low density single family.

b. Northeast Centerville is located almost entirely on the foothills of the Wasatch Mountains. Low density residential development will have the least impact on these sensitive hillside areas. Care must be taken in all development to consider and mitigate the impact upon the hillside environment.

2. Commercial Policies

No commercial uses currently exist in northeast Centerville, and none are anticipated.

a. No commercial development shall be located in any area of northeast Centerville. In particular, no commercial development shall be permitted north of Parrish Lane on Main Street so that residential character of this area may be maintained.

3. Community Facilities

a. Parks

While the greatest concentration of school-aged children lives in northeast Centerville, not one City park is located here. The current need for a park in this neighborhood is great, and will increase as new development occurs. Centerville City shall pursue the acquisition and development of property for a City park in northeast Centerville as its top parks priority. The Rockwood gravel pit or the Ford property on upper Ricks Creek would be good locations for such a park.

b. Water

City water service to this neighborhood needs to be upgraded in the near future. As new development occurs, this situation will be even more critical. Centervlle City should pursue the development of new water sources and storage in this area to improve water availability and pressure. To preserve scarce culinary water, all new developments should be required to supply secondary water for maintenance of landscaping and outdoor use. This will necessitate the acquisition and development of ground water sources. Until additional water supplies are available, future residential development in this neighborhood must be carefully considered for impact on the City water system.

SECTION 12-480-5. NEIGHBORHOOD 4, NORTHWEST. [9]

Overview

The Northwest Neighborhood is located between Lund Lane, Main Street, Parrish Lane, and I-15. Most of the Northwest Neighborhood has already been developed, and consists of a variety of uses, including: single-family residential, multi-family residential of various densities and types,

[9] Amended by Ord. No. 2003-11, April 1, 2003

commercial, and professional office. The only substantial undeveloped areas are near Lund Lane, on the northern boundary of the City, and the Pineae Nurseries, near Parrish Lane.

Issue: Future land-uses and transitions between different land uses.

Perhaps the two most significant issues in the Northwest Neighborhood are future land-use patterns and transitions (buffers) between different land uses. The existing land-use patterns indicate a mix of commercial, residential of varying types and densities, and professional office in the area between Parrish Lane and Chase Lane. From Chase Lane to Jennings Lane, the uses change to primarily residential of medium to low-density. North of Jennings Lane is almost exclusively low-density residential, with the exception of Greenfields, an older, medium-density residential development on Frontage Road.

- **Goal:** Establish appropriate land-use patterns and land-use transitions.
    - **Policy:** Only compatible land-uses shall be allowed adjacent to each other, as outlined in the *Land-use Hierarchy Standards* section of this ordinance.
    - **Policy:** Land-use types and densities shall be set forth in the *General Plan Land-use Map*, when adopted.
    - **Policy:** All future developments must have appropriate landscaping/design transitions, as outlined in the *Transition Design Standards* section of this ordinance. (To be created; essentially a set of design guidelines/standards to facilitate transitions between different uses, intensities of operation, and residential densities.)

Issue: Semi-rural Residential areas.

A couple of areas north of Jennings Lane have developed over time as semi-rural residential, with characteristics such as ½ to 1 acre lots, and the keeping of some domestic farm animals. These areas don't qualify as true rural residential, which typically requires a minimum of 5 acres per dwelling. Historical planning practices show that 1 acre zoning is not advisable because it is too small for true agricultural, too big for purely residential purposes, and too small to subdivide when the current owners no longer want to maintain the property and/or move.

- **Goal:** Preserve existing areas of semi-rural residential for current property owners.
    - **Policy:** Amend zone text to create a zone or set of standards that regulates the keeping of domesticated farm animals in residential areas.
    - **Policy:** Amend zone text to create overlay or other designation establishing a boundary for areas to be preserved as semi-rural residential.
- **Goal:** Preserve viability of area for potential future development.
    - **Policy:** Require all new lots to have frontage equivalent to twice that required in the R-1-10 Zone.
    - **Policy:** Anticipate future ordinances allowing accessory dwelling units and/or small PUDs in these areas.

Issue: Frontage Road, 400 West, and Main Street.

Frontage Road has been designed and built as a collector road for residential areas in the south Farmington/north Centerville area, but occasionally functions as an arterial when accidents occur on I-15. 400 West is a residential collector for the interior of the Northwest Neighborhood. Main Street is a minor arterial that provides a connection to both Bountiful and Farmington.

- **Goal:** Preserve the viability of Frontage Road.
  - **Policy:** No future development shall front or have direct access onto the Frontage Road.
  - **Policy:** All roads (both public and private), connecting to Frontage Road shall meet the minimum city standard for a public residential street, including parkstrips and sidewalks.
  - **Policy:** All future development along Frontage Road shall be buffered according to City landscaping standards the criteria set forth in the *Transition Design Standards* section of this ordinance.
- **Goal:** Preserve viability of area for potential future development.
  - **Policy:** Require all new lots to have frontage equivalent to twice that required in the R-1-10 Zone.
  - **Policy:** Anticipate future ordinances allowing accessory dwelling units and/or small PUDs in these areas.

Issue: Commercial development

In the past, commercial development in the Northwest Neighborhood has been limited to areas immediately adjacent to Parrish Lane.

- **Goal:** Establish an appropriate boundary for commercial uses.
  - **Policy:** High to very high-intensity commercial uses must be located within 500 feet of Parrish Lane.
  - **Policy:** Medium intensity commercial uses, such as small professional offices, must be located within 1000 feet of Parrish Lane.
- **Goal:** Preserve and enhance commercial activity along Parrish Lane.
  - **Policy:** Establish a "gateway" feature into the city near the I-15 interchange.
  - **Policy:** Actively work to reduce direct access onto Parrish Lane and require all new development to occur in commercial centers with shared access and signalized intersections.
  - **Policy:** Actively work to improve the appearance and function of existing strip commercial development and discourage new strip commercial projects reduce strip commercial development and disallow any new strip commercial projects.
  - **Policy:** Actively encourage a reduction in the number of freestanding signs along Parrish Lane. Encourage businesses to co-locate and/or use monument signs.

- **Policy:** Actively encourage all businesses to bring their landscaping into conformance with current landscaping standards.

Residential Densities/Development [10]

Residential densities shall be based primarily on their proximity to public services. Higher residential densities should be located in areas adjacent to basic, high-intensity facilities/services. Densities should naturally decrease as the distance increases away from these facilities/services. Multi-family projects, PUDs, developments with private roads, and other similar types of projects are permitted only on parcels 3 acres or larger. The maximum density allowed on a residential property is as follows:

- The base density for all of Centerville will be a maximum of 4 units/acre.
  - Areas within ½ mile radius of a gas station with mini-mart may be allowed up to an additional 4 units/acre; and
  - Areas within ¼ mile radius of a full-service grocery store may be allowed up to an additional 4 units/acre; and
  - Areas within ¼ mile radius of a light rail or commuter rail station may be allowed up to an additional 4 units/acre.

The maximum allowed density in any area shall not exceed 12 units/acre.

Land Use Hierarchy Standards

Only uses in the same category or in an adjacent category may be located next to each other. At least 100 feet of separation must occur before a use in a subsequent category may be employed. For example, a Very High Intensity use can not be located next to a Medium Intensity use unless there is a High Intensity use between them creating at least 100 feet of separation.

Very High Intensity

- Commercial uses with over 50,000 sq ft total floor area
- Any commercial site greater than 3 acres
- Any use involving repair or maintenance of a vehicle
- Any commercial use with a drive through
- Any use frequently open for operation after midnight or before 7 a.m.
- Any heavy industrial use; public or private
- Office/warehouse uses with outdoor storage
- Commercial uses with outdoor sales and/or storage
- Homeless shelters, substance abuse facilities

High Intensity

- Commercial uses with 10,000 to 50,000 sq ft total floor area

[10] Amended by Ord. No. 2012-23, August 7, 2012

- Any commercial use with a 1 to 3 acre site
- All restaurants without a drive through
- Gasoline station without repair facility and/or carwash
- Any light industrial use
- Office/warehouse without outdoor storage
- Professional office – greater than 4,000 total sq ft
- Hospitals, clinics, treatment centers
- Residential uses greater than 8 units/acre
- Mixed-use developments with greater than 10,000 sq ft floor area/acre
- Public and private recreational facilities/gyms

Medium Intensity

- Commercial uses on sites smaller than 1 acre
- Professional office – less than 4,000 total sq ft
- Mixed-use developments with less than 10,000 sq ft floor area/acre
- Temples, synagogues, or similar structures greater than 10,000 sq ft
- Residential uses between 4 and 8 units/acre

Low Intensity

- Residential uses less than 4 units/acre

Uses appropriate at all levels of intensity

- Public utility structures of less than 900 sq ft.
- Parks
- Churches/religious facilities with less than 10,000 sq ft total floor area
- Structures approved for historical preservation
- Existing, non-conforming uses

CENTERVILLE CITY
COMMUNITY DEVELOPMENT DEPARTMENT

655 North 1250 West, Centerville, Utah 84014
(801) 292-8232

STAFF REPORT
AGENDA: ITEM 1

PROPERTY OWNER:	**ROBERT AND SHARLENE HAWKES** **77 WEST LUND LANE** **CENTERVILLE, UT 84014**
APPLICANT:	**PHIL HOLLAND** **WRIGHT DEVELOPMENT GROUP** **1178 WEST LEGACY CROSSING #100** **CENTERVILLE, UT 84014**
EMAIL ADDRESS:	**PHIL@WRIGHTDEVELOPMENTGROUP.NET**
PROPERTY:	**77 WEST LUND LANE** **THE MANOR AT LUND LANE**
ACREAGE:	**4.85**
TOTAL LOTS:	**12**
CURRENT ZONING:	**AGRICULTURAL-LOW (A-L)**
APPLICATIONS:	**ZONE MAP AMENDMENT, REZONE FROM AGRICULTURAL-LOW (A-L) TO RESIDENTIAL-LOW (R-L)** **CONCEPTUAL SUBDIVISION**
RECOMMENDATION:	**RECOMMEND THE REZONE TO THE CITY COUNCIL AND ACCEPT THE CONCEPTUAL SUBDIVISION**

BACKGROUND

The Hawkes Family, who own the property located at 77 West Lund Lane, desire to develop their land into a subdivision and have chosen Wright Development to pursue this plan. Phil Holland with Wright Development is requesting a rezone of the property from Agricultural-Low (A-L) to Residential-Low (R-L) and divide the parcel into 12 individual lots. With the total size being 4.85 acres, the average density for the project would be 2.47 units per acre. This would be an allowable density, since an R-L Zone allows up to 4 units per acre. This report will first look at the request for a rezone and then address the idea of a conceptual

subdivision. The conceptual plat acceptance will be based on the approval by the City Council for the rezone.

PROPOSED ZONE MAP AMENDMENT

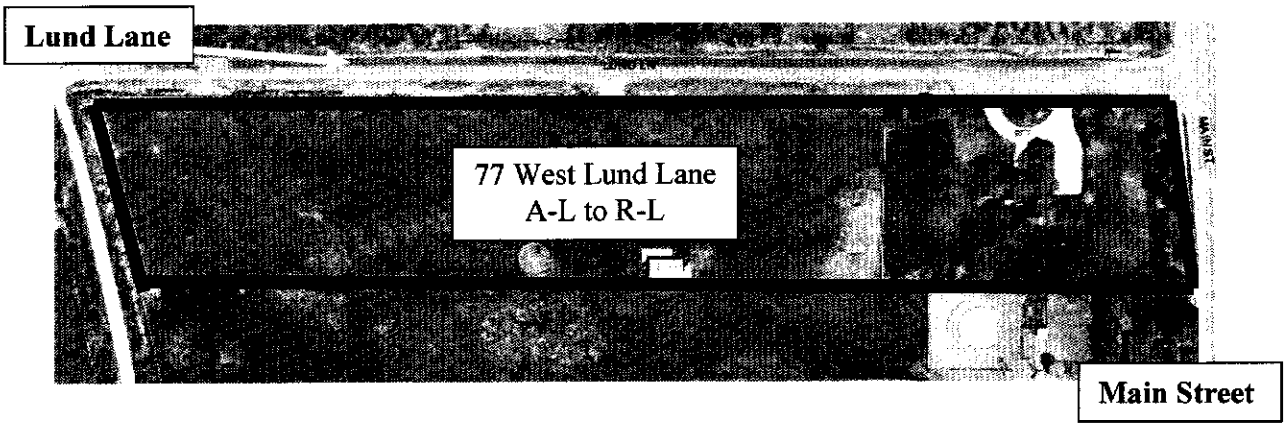

REVIEW AND ANALYSIS OF THE REQUEST

Factors to be considered, Section 12-21-080(e)

1. **Is the proposed amendment consistent with the goals, objectives and policies of the City's General Plan?**

   - **Staff Response:** This parcel of land is located within Neighborhood 4, Northwest Centerville (GP Section 12-480-5). One of the main goals for this neighborhood is that only compatible land uses be developed adjacent to each other. Another goal found within this section is preserving the viability of the area for potential future development. Finally, it discourages lots of one acre, describing them as being too large to maintain, yet to small for property owners to divide in the future.

     This section of the General Plan appears vague when narrowing down an exact plan for the area along Lund Lane. Yet, staff believes the proposed amendment is consistent with the goals and objectives that have been described in the General Plan.

2. **Is the proposed amendment harmonious with the overall character of existing development in the vicinity of the subject property?**

   - **Staff Response:** Based on the abundance of area zoned R-L, low-density single-family development appears to be the preferred type of housing within the City. The property on Lund Lane is found within a semi-rural residential area with single-family homes to the east and west. Further to the west is the

Woods Park Subdivision, which is zoned R-L/PD and to the east of Main Street is also zoned R-L. Staff believes the proposed amendment will be in harmony with the overall character of the existing development in the vicinity.

3. **What is the extent to which the proposed amendment may adversely affect adjacent property?**

   - ***Staff's Response***: Some may see this subdivision as an impact to the rural atmosphere of Centerville. Yet, if the rezone meets the criteria found in Section 12-21-080(e), and negative impacts can be mitigated, a property owner has the right to develop his property as he sees fit. Staff has met with the developer and does not see any adverse effects to the rezone. However, a few issues will need to be addressed as part of the subdivision process; such as a soils report and proper drainage.

4. **What is the adequacy of facilities and services intended to serve the subject property?**

   - ***Staff Response***: The proposed development already has an existing home with all the necessary utilities stubbed from Lund Lane. The other proposed 11 lots will need to have adequate service and be stubbed from Lund Lane. Other public improvements will need to be completed on the south side of Lund Lane and meet all applicable City Standards.

PLANNING STAFF RECOMMENDATIONS

PROPOSED ACTION: I hereby make a motion for the Planning Commission to accept the Zone Map Amendment for the property located at 77 West Lund Lane from Agricultural-Low (A-L) to Residential-Low (R-L), and to recommend approval to the City Council.

SUGGESTED REASONS FOR THE ACTION:

1. The proposed amendment meets the requirements found in Section 12-21-080(4)(e).
2. The proposed Zone Map Amendment meets the goals and objectives of the General Plan concerning Neighborhood 4 [Section 12-480-5].
3. Adequate facilities are located within the subject property along Lund Lane [Section 12-21-080(e)(5)].
4. Any further conceptual plat acceptance by the Planning Commission is subject to approval of the rezone by the City Council.

CONCEPTUAL SUBDIVISION REVIEW - CHAPTER 15-2

Process
The conceptual subdivision review gives the applicant an opportunity to receive guidance from the City in relation to subdivision regulations and the layout. It also allows the public an opportunity to express their concern regarding the proposed subdivision.

General Plan
As stated previously in the Zone Map Amendment review, the property is found within Neighborhood 4, Northwest Centerville (GP Section 12-480-5). The goals and objectives for this area were indistinct for the location of Main Street and Lund Lane. It did state that development should be compatible with one another and should be adjacent to each other. It also encouraged preserving the viability of land for potential future development. The most specific statement for the area is the discouragement of one-acre lots, stating they are too large to maintain, yet to small for property owners to divide in the future. With Wright Development pursing a rezone from A-L to R-L and desiring to divide the property into a single-family development, staff believes they have met the intent of the General Plan.

Zoning Ordinance
The property is currently zoned A-L (Agricultural-Low), yet Wright Development has requested a rezone to R-L (Residential-Low). Therefore, staff will review the zoning criteria for the requested rezone.

According to Section 12-30-020(b)(1) of the Zoning Ordinance, the R-L Zone has been established to permit the development of detached single-family homes on individual lots at 4 units per acre. The applicant is requesting the 4.85 acre parcel be divided into 12 lots, which average out to be about 2.47 units per acre. The lots have differing sizes ranging from the largest being 23,829 square feet to the smallest at 15,733 square feet. On the largest of the lots (Lot 11), is found the existing home which will remain intact and sold to a prospective buyer.

All of the lots exceed the minimum frontage at an average of 98.43 feet, with the largest being 138.10 feet and 9 of the lots measuring 90 feet. Although each lot has plenty of buildable area, the preliminary plans will need to show required setbacks and a buildable pad for each lot. Each new home will need to meet the required Development Standards found in Table 12-32-1 of the Zoning Ordinance concerning development within the R-L Zone.

Staff is confident the proposed subdivision will meet the requirements found within the Zoning Ordinance that pertain to development of a single-family dwelling.

GENERAL REQUIREMENTS FOR ALL SUBDIVISIONS - CHAPTER 15-5

Layout Section 15-5-101 and Lots Section 15-5-102
"Subdivision means any land that is divided, re-subdivided or proposed to be divided into two or more lots..."[Section 15-1-104(48)]. The Manor at Lund Lane will have 12 lots with driveway access from Lund Lane. Each lot has been designed in a rectangular shape, and as

stated previously, meet and exceed the requirements for a lot within the R-L Zone. One issue of concern in regard to the layout was that of the length of the block. Section 15-5-101(5) of the Subdivision Ordinance states the following:

"In blocks over 800 feet in length, a dedicated public walkway through the block, at approximately the center of the block, ***may be required***. Such walkways shall not be less than 10 feet in width unless otherwise approved by the City."

City staff or the Planning Commission may require a public walkway if a need is evident. However, staff does not believe this is necessary since Main Street has a dedicated sidewalk and there is no knowledge of future development to the south, and eventually the road to the west of the project will be completed with an additional sidewalk.

Street, Drainage, and Utility Improvements Section 15-5-103, 105, 106

Lund Lane does not currently meet the Street Improvement Standards for Centerville. The street along the new subdivision will need to be improved to include new curb and gutter, along with new pavement as necessary to meet the required width. A 4-foot park-strip and 4-foot sidewalk will also need to be installed along the entire length of the street frontage. This information will need to be indicated on the preliminary plans. In addition, all driveway access should be from Lund Lane, with Lot 1 not having access off the future road to the West, and Lot 12 not having access from Main Street.

The Public Works Director has requested as part of the approval process, a soils report be prepared and submitted to City Staff for review. He believes the property has had a large amount of fill in some sections and would like to ensure that proper stability can be found. Along with this report, drainage should be reviewed to ensure that all necessary drainage does not flow to other properties. The soils and drainage will need to be addressed with the preliminary plans and reviewed by City staff.

Utility improvements will be required for all lots except for Lot 11, which already exists. These utility improvements will need to be addressed on the preliminary plat and reviewed by City Staff. All utility provider sheets will need to be submitted indicating they can serve each lot. The preliminary plans will also need to depict three public utility easements with the front measuring 10 feet and all others at 7 feet. Finally, the applicant will need to depict all fire protection, including the existing and proposed fire hydrants (if required by the Fire Marshal).

CONCLUSION

The applicant has provided adequate information to depict how the property is to be developed. As a reminder, the Conceptual Subdivision Acceptance is subject to the approval of the rezone by the City Council.

PLANNING STAFF RECOMMENDATION

Suggested Motion for the Conceptual Subdivision Plat for The Manor at Lund Lane Subdivision located at 77 West Lund Lane: I hereby make a motion for the Planning

Commission to accept the Conceptual Subdivision Plat for The Manor at Lund Lane Subdivision, located at 77 West Lund Lane, subject to the following:

1. Conceptual subdivision acceptance is subject to the rezone approval by the City Council.
2. The applicant shall submit an application for a preliminary plat and meet all the standards found in Chapter 15-3 of the Subdivision Ordinance.
3. The preliminary plat shall indicate the following information:
    a. Correct setbacks standards found on Table 12-32-1 of the Zoning Ordinance
    b. Buildable pad on each lot.
    c. A 4-foot sidewalk, 4-foot park-strip, curb and gutter and extension of asphalt as needed. All public improvements shall meet City specifications and be bonded for by the developer.
    d. Three public utility easements on each lot with the front easements measuring 10 feet and all other sides measuring 7 feet.
    e. Adequate fire protection including all existing fire hydrants and any new fire hydrants as required by the Fire Marshal.
4. All driveways for each lot shall be located off Lund Lane.
5. A soils report and drainage information shall be submitted to City staff for review.
6. Utility provider sheets shall be submitted indicating all utility providers can service each lot.
7. The midblock access as stated in Section 15-5-101(5) of the subdivision should not be required for this development

Suggested Reasons for the Action (Findings):

1. The conceptual plat acceptance is subject to the rezone approval by the City Council from A-L to R-L [Section 12-21-080(d)(4)].
2. The conceptual subdivision is in harmony with the General Plan [Section 12-480-5].
3. The new subdivision meets the objectives for development within a Residential-Low Zone [Section 12-30-020(b)(1)].
4. It appears all applicable development standards for development within an R-L Zone have be satisfied [Table 12-32-1].
5. It appears all general requirements for all subdivisions have been satisfied [Chapter 15-5].
6. All applicable standards found in the Subdivision Ordinance pertaining to a conceptual subdivision application have been satisfied [Chapter 15-2].
7. Staff does not believe the midblock pedestrian access as stated in Section 15-5-101(5), is necessary since Main Street has a dedicated sidewalk, there is no knowledge of future development to the south, and eventually the road to the west of the project will be completed with an additional sidewalk.

THE MANOR

AT LUND LANE

CENTERVILLE, UTAH

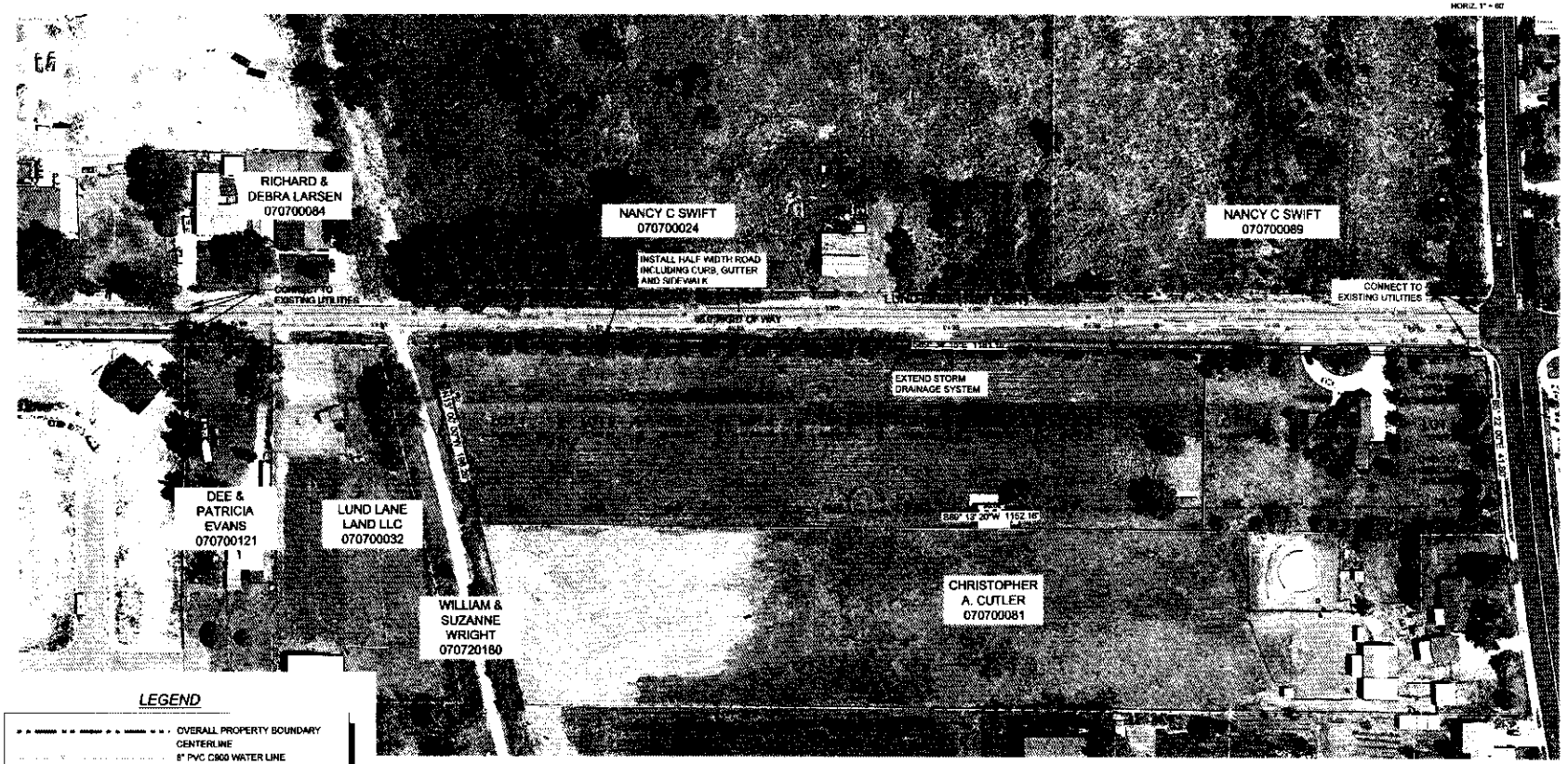

LEGEND

- OVERALL PROPERTY BOUNDARY
- CENTERLINE
- 8" PVC C900 WATER LINE
- EXISTING 8" WATER LINE
- 8" PVC SDR 35 SEWER LINE
- EXISTING 8" SEWER LINE
- 8" PVC SDR 35 LAND DRAIN LINE
- EXISTING 8" LAND DRAIN LINE
- 15" RCP CLASS III STORM DRAIN LINE
- EXISTING 18" STORM DRAIN LINE
- 8" PVC C900 SECONDARY WATER LINE
- EXISTING 8" SECONDARY WATER LINE
- 4' or 5' Ø MANHOLE
- CITY STANDARD FIRE HYDRANT
- 8" WATER/SECONDARY WATER VALVE
- INLET BASIN

BOUNDARY DESCRIPTION (PARCEL # 07-07-0070 & 07-07-0071)
BEGINNING ON THE WEST RIGHT OF WAY LINE OF HIGHWAY 106 AT A POINT NORTH 0°15'20" EAST 184.07 FEET ALONG A 1/4 SECTION LINE AND SOUTH 89°13'20" WEST 248.60 FEET FROM THE CENTER OF SECTION 31, TOWNSHIP 3 NORTH, RANGE 1 EAST, SALT LAKE MERIDIAN; THENCE SOUTH 89°13'20" WEST 1152.16 FEET TO AN EXISTING FENCE; THENCE ALONG SAID FENCE NORTH 13°00' WEST 198.26 FEET TO THE SOUTH RIGHT OF WAY LINE OF LUND LANE; THENCE ALONG SAID RIGHT OF WAY SOUTH 89°33'40" EAST 1161.16 FEET TO THE WEST RIGHT OF WAY LINE OF HIGHWAY 106; THENCE SOUTHERLY 81.27 FEET ALONG THE ARC OF A 5762.65 FEET RADIUS CURVE TO THE LEFT (LONGCHORD= SOUTH 4°57'45" EAST 81.27 FEET) ALONG SAID RIGHT OF WAY LINE; THENCE SOUTH 5°22' EAST 41.60 FEET ALONG SAID RIGHT OF WAY LINE; THENCE SOUTHERLY 46.14 FEET ALONG THE ARC OF A 3852.80 FEET RADIUS CURVE TO THE LEFT (LONGCHORD= SOUTH 5°42'35" EAST 46.14 FEET) ALONG SAID RIGHT OF WAY LINE TO THE POINT OF BEGINNING.

CONTAINS 4.85 ACRES, MORE OR LESS

FEMA FLOOD INFORMATION
THE SUBJECT PROPERTY IS LOCATED WITH A FEMA FLOOD PLAIN ZONE X.

ZONING DATA
CURRENT ZONING = A-L
PROPOSED ZONING = R-L

PREPARED FOR:

Phil Holland
Wright Development Group
1176 N. Legacy Crossing Blvd., Ste. 100
Centerville, Utah 84014
Office (801) 773-7559
Cell (801) 663-1565
Fax (801) 773-7558
phil@wrightdevelopmentgroup.net

REVISION
DATE
NO.

DRAWING IS NOT TO SCALE
IF BAR DOES NOT MEASURE 1 INCH
0 1/2 1

CONCEPT PLAN
THE MANOR AT LUND LANE
CENTERVILLE CITY, DAVIS COUNTY, UTAH

DESIGN: SW
DRAWN: SW
CHECKED: SW
DATE: [illegible]

SHEET:
C1

PLANNING COMMISSION MINUTES OF MEETING
Wednesday, March 23, 2016
7:00 p.m.

A quorum being present at Centerville City Hall, 250 North Main Street, Centerville, Utah. The meeting of the Centerville City Planning Commission was called to order at 7:00 p.m.

MEMBERS PRESENT

Kevin Daly
Cheylynn Hayman
David Hirschi, Chair
Gina Hirst
Scott Kjar
Logan Johnson
Becki Wright

STAFF PRESENT

Corvin Snyder, Community Development Director
Lisa Romney, City Attorney
Brandon Toponce, Assistant Planner
Kathy Streadbeck, Recording Secretary

VISITORS

Interested Citizens

PLEDGE OF ALLEGIANCE

OPENING COMMENT/LEGISLATIVE PRAYER Chair Hayman

MINUTES REVIEW AND APPROVAL

The minutes of the Planning Commission meeting held March 9, 2016 were reviewed and amended. Commissioner Johnson made a **motion** to approve the minutes as amended. The motion was seconded by Commissioner Wright and passed by unanimous vote (7-0).

PUBLIC HEARING | THE MANOR AT LUND LANE | 77 WEST LUND LANE - Consider the proposed applications: Request #1: Zone Map Amendment from A-L (Agricultural-Low) to R-L (Residential-Low), 4.85 acres; and Request #2: (Pending Actual Rezone Approval) Conceptual Subdivision Plan, 12-Lots. Phil Holland, Wright Development Group, Applicant.

Commissioner Johnson recused himself from this matter.

Brandon Toponce, Assistant Planner, reported the applicant desires to rezone (zone map amendment) their property from Agricultural-Low (A-L) to Residential-Low (R-L) and then subdivide the property into twelve (12) lots, which calculates to approximately 2.47 units per acre. The R-L zone permits four (4) units per acre. Mr. Toponce reviewed the criteria for a rezone approval explaining the proposed use is consistent with the General Plan, is harmonious with surrounding uses, does not appear to pose an adverse effect on its surroundings, and has adequate services available for each lot. Overall, staff recommends approval of the rezone.

Mr. Toponce reviewed the conceptual site plan for the proposed development of twelve (12) lots. He explained each lot is a bit different in size but all lots are larger than required for the R-L Zone. He said the 12-lot subdivision includes the existing home as one of the lots, so only 11 properties will be available for build. He reviewed the proposed setbacks, street frontage, lot widths, and required public utility easements. He explained the preliminary plans will be required to show all setbacks, buildable pads, sidewalk, curb and cutter, street improvements, utilities, and fire protection. All properties and driveways will front on Lund Lane. Mr. Toponce reviewed the Subdivision Ordinance with regard to the proposed plan. He explained the Ordinance states the City may require a mid-block walkway for blocks over 800 feet in length. The proposed lots exceed this 800-foot length but staff believes a walkway is unnecessary for this subdivision since Main Street has an existing dedicated sidewalk, the road to the west will have a completed sidewalk, and there is no knowledge of future development to the south. Staff has requested a soil report due to concerns of fill dirt on the property. In addition, the applicant will be required to work with City staff on an appropriate drainage plan. Overall, staff is comfortable with the proposed subdivision concept and recommends approval.

Commissioner Wright asked how the existing home is calculated into the proposed density. She asked if the proposed 4-foot park strip is standard or if the Commission could require a greater width for appropriate street trees and public space. She said the Commission has discussed (previous past meetings) proactive planning and urban trails. She said this may be an opportunity to require a greater public space since the mid-block walkway is not being required.

Cory Snyder, Community Development Director, said the density calculation includes all lots, even the existing home. He said the only allowable use in the R-L Zone is single-family. Mr. Snyder explained Lund Lane is owned by both Centerville City and Farmington City. The municipal boundary runs down the middle of Lund Lane. He said Centerville's public utility easement runs along the south side of Lund Lane. Any street improvements will be required to the south side of Lund Lane only. He also explained the City is only allowed to ask for the standard 4-foot park strip as required per City Ordinance. He said the Commission could ask the applicant their opinion on a greater public space, but cannot require it.

Chair Hirschi said Lund Lane always seems to be in disrepair and improvements have always been a challenge because of the duel ownership. He encouraged staff to use this opportunity to work with Farmington City and make the necessary road improvements to better

this area and community. Commissioner Wright said the staff report mentioned a complete street plan per the City Engineer. She said the applicant should make the necessary improvements as if a full road repair were to be completed.

Phil Holland, applicant, said the R-L Zone is the biggest zone in Centerville. He said the R-L Zone allows up to 4-units per acre but they have chosen to go with larger lots (2.43 units per acre) because of the surrounding area which includes A-L Zones. He believes the larger lots will help maintain the feel of the community in this area. He said all standards and ordinances as discussed and required will be completed for the project. He plans to follow the ordinances as outlined. He agreed the mid-block walkway does not make sense because it would end in the middle of the block at the property line, essentially making a sidewalk to nowhere.

Lisa Romney, City Attorney, explained there are two (2) applications for this applicant. The first application is for the rezone from A-L to R-L. This is a legislative process and the City Council will provide the final approval for the proposed rezone. The second application is for the conceptual site plan, i.e., the proposed layout for 12 lots. She explained the rezone would permit 4-units per acre which is allowed regardless of the accepted conceptual site plan.

Chair Hirschi opened the public hearing for both the zone map amendment (rezone) and the conceptual site plan.

Chris Cutler said he owns the A-L property to the south of this site. He said he would prefer this property remain A-L as well. He said the applicant could slightly increase the lot sizes to ½-acre allowing the A-L Zone to remain. He said most of this area is agricultural and should be allowed to remain as such. He also agreed the mid-block walkway would lead to nowhere and is unnecessary because it would dead end at his horse pasture.

Lisa Robinson said she too lives in the vicinity and her property is also zoned A-L. She too would prefer a ½-acre lot subdivision that is kept agricultural. She said larger lots will help maintain the diversity of the community. She also said Centerville residents have been very clear they prefer lower density in Centerville.

Brent Robinson also requested the property remain A-L. He said he has no aversion to development but believes it could be nicely developed with ½-acre lots. He said the majority of Centerville is already R-L and this area should be kept as A-L. He expressed concern that the R-L zone will tempt the developer to amend his plan and increase it to the permitted 4-units per acre. He said keeping the A-L Zone will ensure the community gets a larger ½-acre lot development.

Mila Cutler said she would like the A-L zone to stay. She expressed concern with child safety. She said this development will bring more children to the area and will put them at risk as they will be next to her horse property which can be dangerous.

Josh Christensen said he recently purchased a home in the area because of the large lots and open feel. He would prefer it stay that way.

John Higley said he is happy to see a larger lot development concept rather than a high density, small lot development like the one to the west recently built on the Frontage Road. He said Centerville will continue to grow and develop and this is a good option for this area that will help encourage compatible future development.

Seeing no one else wishing to comment, Chair Hirschi closed the public hearing.

Mr. Snyder explained the higher density project to the west was a development of mutual benefit. He explained the City and this neighborhood got a much needed, significant water drainage system upgrade and in return the development got a slightly higher density allotment.

Mr. Holland thanked the public for their comments. He reviewed the zoning map for this area showing the majority of the area is zoned R-L with a limited A-L zone remaining. He said the only reason these properties have not rezoned to R-L is because they have been owned by the same families for years. He projected the entire area will develop at some point in the future and said his larger lot concept will be beneficial when that happens because it will allow the City to require development similar to those existing. He said he has no intention of maximizing the density for this development. He said this is the best plan for the market.

Commissioner Daly asked if the applicant would still be required to install street improvements if the rezone was not approved. Commissioner Wright questioned how many lots would be possible if the developer chose to increase the development to the permitted 4-units per acre.

Mr. Snyder said any development, whether in the A-L Zone or the R-L Zone, would be required to make all necessary street improvements. However, he is unsure if a development would be cost effective if the density was too low. He also said he is unsure how many lots would be possible at 4-units an acre as there are many factors involved. The Commission speculated that a potential of 15 lots may be possible.

Chair Hirschi made a **motion** for the Planning Commission to accept the Zone Map Amendment for the property located at 77 West Lund Lane from Agricultural-Low (A-L) to Residential-Low (R-L), and to recommend approval to the City Council.

Reasons for the Action:

1. The proposed amendment meets the requirements found in Section 12-21-080(4)(e).
2. The proposed Zone Map Amendment meets the goals and objectives of the General Plan concerning Neighborhood 4 [Section 12-480-5].

3. Adequate facilities are located within the subject property along Lund Lane [Section 12-21-080(e)(5)].
4. Any further conceptual plat acceptance by the Planning Commission is subject to approval of the rezone by the City Council.

The motion was seconded by Commissioner Kjar.

Chair Hirschi said although this carves out a small portion of the A–L zone there is also several R-L zones in the vicinity including residential uses across the street in Farmington. He said the proposed development is the least impacting option for this area.

Commissioner Kjar said the residential lots across the street in Farmington are substantially smaller than the lots proposed for this development. He said the proposed lot sizes are very nice and will make for an upscale development that will greatly enhance the area.

Commissioner Wright disagreed. She said the lots are so close to the ½-acre mark she believes the A-L Zone could remain and the developer would only loose one lot. She is not comfortable allowing 4-units per acre for this area.

Commissioner Hayman expressed concern that rezoning this property will box in the A-L Zone creating an island. She agreed the layout is nice but is worried this will create a domino effect for future smaller lot development.

Mr. Snyder reminded the Commission that a finding related to the four (4) approval criteria would need to be called out if the rezone is not recommended. He said the General Plan encourages R-L development for this area.

Commissioner Wright said she does not believe the proposed development is harmonious with surrounding uses. She said keeping this property A-L is consistent with the character for this area and will still allow the applicant to develop.

Mr. Snyder said, as a planner, he does not see a reasonable way to deny the rezone. He said the plan for the future is to move toward development. He said the purpose of the A-L Zone is to allow animals and a ½-acre lot cannot adequately accommodate horses or other farm animals. He said the General Plan defines both A-L and R-L as low density. Centerville's General Plan policy is to move to low density 4-units per acre lots. The proposed plan follows that policy.

Chair Hirschi said the proposed concept will set an acceptable precedent for future development in this area. This will allow future Commissions to require the same large lot, high standard. He agreed A-L does not serve the purpose of the General Plan policy for the future.

Chair Hirschi called for **vote** on the motion. The motion passed with a roll-call vote (5-1). Commissioner Wright opposed.

Commissioner Wright said she does like the proposed layout and believes it will bring some diversity to the area but also believes compatible development is possible while maintaining the A-L Zone. Commissioner Hayman thanked the developer for maximizing the lot sizes and said she would be disappointed if this changes to maximize density. Commissioner Hirst said she likes the proposed development and lot sizes and she too would be disappointed if the density was increased from this original concept.

Commissioner Kjar made a **motion** for the Planning Commission to accept the Conceptual Subdivision Plat for The Manor at Lund Lane Subdivision, located at 77 West Lund Lane, subject to the following directives:

1. Conceptual subdivision acceptance is subject to the rezone approval by the City Council.
2. The applicant shall submit an application for a preliminary plat and meet all the standards found in Chapter 15-3 of the Subdivision Ordinance.
3. The preliminary plat shall indicate the following information:
   a. Correct setbacks standards found on Table 12-32-1 of the Zoning Ordinance
   b. Buildable pad on each lot.
   c. A 4-foot sidewalk, 4-foot park-strip, curb and gutter and extension of asphalt as needed. All public improvements shall meet City specifications and be bonded for by the developer.
   d. Three public utility easements on each lot with the front easements measuring 10 feet and all other sides measuring 7 feet.
   e. Adequate fire protection including all existing fire hydrants and any new fire hydrants as required by the Fire Marshal.
4. All driveways for each lot shall be located off Lund Lane.
5. A soils report and drainage information shall be submitted to City staff for review.
6. Utility provider sheets shall be submitted indicating all utility providers can service each lot.
7. The midblock access as stated in Section 15-5-101(5) of the subdivision should not be required for this development.

Reasons for Action (findings):

1. The conceptual plat acceptance is subject to the rezone approval by the City Council from A-L to R-L [Section 12-21-080(d)(4)].
2. The conceptual subdivision is in harmony with the General Plan [Section 12-480-5].
3. The new subdivision meets the objectives for development within a Residential-Low Zone [Section 12-30-020(b)(1)].

4. It appears all applicable development standards for development within an R-L Zone have be satisfied [Table 12-32-1].
5. It appears all general requirements for all subdivisions have been satisfied [Chapter 15-5].
6. All applicable standards found in the Subdivision Ordinance pertaining to a conceptual subdivision application have been satisfied [Chapter 15-2].
7. Staff does not believe the midblock pedestrian access as stated in Section 15-5-101(5), is necessary since Main Street has a dedicated sidewalk, there is no knowledge of future development to the south, and eventually the road to the west of the project will be completed with an additional sidewalk.

The motion was seconded by Commissioner Wright and passed by unanimous roll-call vote (6-0).

PUBLIC HEARING | BARTILE ROOFS | 725 NORTH 1000 WEST - Consider the proposed Amended Site Plan for Bartile Roofs on property located at 725 North 1000 West, for the purpose of constructing new storage sheds. Lewis Evans, Bartile Roofs Inc., Applicant.

Commissioner Johnson rejoined the meeting.

Cory Snyder, Community Development Director, reported the applicant desires to construct three (3) large storage buildings on his property and possibly reconfigure some of the parking on site. The purpose of the site plan amendment is to house most of the current outdoor product storage. The site does not currently comply with the architectural, landscaping, and parking provisions of the current ordinances and is required to come into compliance unless the expansion is less than 30% of the floor area. The applicant desires to limit the new construction to just below the 30% threshold. The applicant previously built some storage sheds in the northeast corner of the property without proper approvals. Those sheds will need to be brought into compliance as well. The proposed new buildings and the unsanctioned sheds will be required to meet current architectural and building standards. The applicant will address drainage and public utility easements as required. The applicant will be required to install parking lot landscaping dependent of the parking lot reconfiguration. Overall, staff believes the proposed changes to the site will enhance the site by upgrading the condition and appearance as encouraged by the General Plan.

Commissioner Daly said the applicant may choose to remain under the 30% threshold for these improvements but questioned if the applicant could choose to do another upgrade in the future, again staying under the 30% threshold, and again be exempt from coming into compliance. Mr. Snyder said that any additional improvements after this point would require full compliance. He said the record will show that the applicant is over the 30% with any additional upgrades.

Marsha Morrow

From: rhawkes@comcast.net
Sent: Thursday, April 14, 2016 6:26 PM
To: Mayor; City Council
Subject: Comment from Centerville Online Contact Form

Robert Hawkes filled out the Centerville Contact form. The following is the submitted information and comment(s):

Contact: Elected

First and Last Name: Robert Hawkes

Address: 77 West Lund Lane

Phone: 801 897 0733

Email: rhawkes@comcast.net

Comments:

Dear City Council:

RE: 77 West Lund Lane Rezone

I wanted to communicate with entire city council and share some thoughts before you make a final decision regarding the rezone. I want to let you know that the rezone process that you have is very divisive to the community. I was quite surprised that when I followed your own masterplan and received approval of the planning and zoning commission I found myself being confronted by my friends and neighbors in the Centerville Council meeting. Despite my best effort in following what I thought was your masterplan and creating large lots, my neighbors, home teaching families and bishop's wife accused me of ruining the culture of the community! Your process is not bringing the community together and if you don't change it it, it will create the same conflict over and over again. I heard all sorts of emotional reactions to the rezone. The common theme was that they were all against this rezone and any other future rezones in north Centerville. Are you prepared to enact a permanent moratorium on all rezoning in north Centerville? If not will your decision be capricious and discriminatory?

Mable Devore is 100 years old and when she passes her acreage is going to be developed. Logically, I would think that if you denied my rezone, it would be part of a larger, universal decision to deny all other future rezones in north Centerville. What applies to me should be a final and permanent decision that applies to all other land owners. If you are afraid of a bait and switch, then figure out a system where you approve the development plans, not just approve a rezone. My rezone will only allow one more house in the entire 5 acre development. Eleven homes instead of ten. All of the bids and plans that I received on the property were exactly the same. The property is too narrow to put a road down the middle.

Here are some facts to consider. Centerville's old dairies are long gone. The very families that oppose the rezone, cut their fruit orchards down years ago. The county does not consider the property agriculture. I have never been able to qualify for "green belt" taxes with the county, it takes over 5 acres. Residents with 1/2 acre lots do not have large animals. North Centerville stopped being agriculture years ago. This is a very narrow neck of land between the old and new highway. This property is ideal for residential property as per masterplan.

We all love to have open space next to us that we don't pay for or take care of but we still get to enjoy. I hope that you will consider the logic of what I'm saying and not just the emotional cries of some neighbors.

Please feel free to contact me with any questions via email or phone. Thanks for you time and thoughtful service to our community. (801) 897-0733

Robert Hawkes, owner of 77 West Lund Lane, Centerville

Submitted On: 2016-04-15 00:25:57

IP Address: 174.52.207.102

Marsha Morrow

From: Paul Cutler <paulcutler@gmail.com>
Sent: Tuesday, April 19, 2016 10:45 AM
To: Cory Snyder; Lisa Romney; Steve Thacker
Subject: Fwd: Comment from Centerville Online Contact Form

More comment

Paul Cutler
801-390-3444
paulcutler@gmail.com

Begin forwarded message:

Resent-From: <citycouncil@centervilleut.com>
From: <mila.cutler@gmail.com>
Date: April 18, 2016 at 6:06:33 PM MDT
To: <citycouncil@centervilleut.com>
Subject: Comment from Centerville Online Contact Form
Reply-To: <mila.cutler@gmail.com>

Hermila A Cutler filled out the Centerville Contact form. The following is the submitted information and comment(s):

Contact:	CityCouncil
First and Last Name:	Hermila A Cutler
Address:	115 W 2150 N
Phone:	801-503-6515
Email:	mila.cutler@gmail.com
Comments:	I wanted to express to you some of my concerns with the rezone for the Manor at Lund Lane subdivision. As I stated in my comments before the council, I believe that the public hearings in the past were just to comply with the law. I am hoping that you will be open to what I have to say. I believe that when the PUD on the the corner of the Frontage Road and Lund Lane was allowed to go through it was a "Spot Zone". This was contrary to what the GP for Centerville staes. In section 12-480 it talks about sem-rural residential areas. The goal states: "Preserve existing areas of semi-rural residential for current property owners." The spot zone and the new proposed subdivision is contrary to this goal.

Section 12-420 #6 states that "Residential development must take into account the existence and impact of high water tables within the City. The Woods subdivision put in the big drain that only helps them. Because of the fill that went in to build up the subdivision Bill and Suzanne Wright's home floods continually. We talked about the high water tables when that subdivision was going in. I believe that this new subdivision will also affect the water table and making it more difficult on the neighbors.

Mr. Snyder has stated that the area north of the proposed subdivision is zoned R-L. The developer also made that point. No one however stated that the development north of the proposed subdivision is in Farmington. I believe that Centerville City and Farmington are two different entities and we should in no way be influenced by what Farmington has done.

It is interesting to me to note what the citizens on 1850 North have done to stop a large number of homes from being built behind their lots. Although it is the opposite of what I am trying to do the principal is the same. They chose to enlarge their existing lots to prevent a subdivision from effecting their way of life.

I realize that most of Centerville is now R-L. I believe that zoning should not be used to establish zoning districts prematurely in response to long-range planning projections. Some areas offer future potential,yes, but may be years away from supportable infrastructure.

The general plan is not a zoning ordinance and the zoning ordinance is not the general plan.

The loss of agricultural land is more than just a loss of undeveloped acreage.

These agricultural lands offer a variety of public benefits:

- Open Space
- Scenic vistas
- Wildlife habitat
- Food and crop production
- Protection of environmentally sensitive areas (such as ground water recharge areas)

I want to thank you for your service and for reading this long letter. I have many more concerns, these are just a few.

Submitted On: 2016-04-19 00:06:32

Marsha Morrow

From: Paul Cutler <paulcutler@gmail.com>
Sent: Tuesday, April 19, 2016 10:47 AM
To: Steve Thacker; Cory Snyder; Lisa Romney
Subject: Fwd: Comment from Centerville Online Contact Form

In case I didn't forward this form

Paul Cutler
801-390-3444
paulcutler@gmail.com

Begin forwarded message:

Resent-From: <citycouncil@centervilleut.com>
From: <cacutler2@gmail.com>
Date: April 13, 2016 at 5:47:43 AM MDT
To: <citycouncil@centervilleut.com>
Subject: Comment from Centerville Online Contact Form
Reply-To: <cacutler2@gmail.com>

Chris Cutler filled out the Centerville Contact form. The following is the submitted information and comment(s):

Contact:	CityCouncil
First and Last Name:	Chris Cutler
Address:	115 W 2150 N
Phone:	801-505-1608
Email:	cacutler2@gmail.com
Comments:	This is a short email to reiterate my view and state that I am opposed to the approval of the rezone of the property on Lund Lane from A-L to R-L. We would like to retain the agricultural "flavor" on the north end of town and keep the lots a little larger. My wife and I would probably be the ones to benefit financially the most if the rezone were approved (in terms of future development) but we feel strongly that it would be better to leave it as is. This doesn't appear to be a large burden on anyone and is in keeping with general plan. Thank you for your consideration. And thank you for your service on the City Council. I know that it is mostly a thankless job so I appreciate the hours spent on behalf of everyone in

Centerville.

Best regards,

Chris Cutler
115 W. 2150 N.
Tel. 801-505-1608

Submitted On: 2016-04-13 11:47:43

IP Address: 166.70.212.244

CENTERVILLE
CITY COUNCIL
Staff Backup Report
4/19/2016

Item No. 3.

Short Title: Award bid for street reconstruction and overlays to Advanced Paving in the amount of $410,977.53

Initiated By: City Engineer and Public Works Director

Scheduled Time: 7:25

SUBJECT

RECOMMENDATION

Award contract to Advanced Paving for the Street Rebuild and Overlay Project 2016 in the amount of $410,977.53.

BACKGROUND

The scope of work for this contract includes:

- reconstruction of 1825 North from Main Street to 150 East, including the 100 East culdesac
- 2-inch overlay on 1900 North from 100 East to 300 East
- 2-inch overlay on Willow Valley Drive (1600 N.) from 575 West to 400 West

The 1825 North reconstruction involves: removal of trees in the parkstrip; removal and replacement of road base to 12-inch depth; replacement of all sidewalks, curb & gutter and asphalt pavement; and installation of storm drain.

ATTACHMENTS:

Description

- City Engineer Recommendation
- Bid Tab
- Letter from Scott Zeidler

Marsha Morrow

From: Kevin Campbell <Kevin.Campbell@esieng.com>
Sent: Friday, April 15, 2016 2:16 PM
To: Steve Thacker
Cc: Randy Randall; Ken Williams; Lisa Romney; Ryan McLeod; Marsha Morrow
Subject: Street Rebuild and Overlay Project 2016 - NOA Recommendation
Attachments: #15-209 Bid Tab_04-15-16.pdf; #15-209 NOA.pdf

Steve,

We received six bids this morning for the above reference project:

1.	Advanced Paving	$ 410,977.53
2.	Staker Parson	$ 448,313.00
3.	Morgan Asphalt	$ 475,851.00
4.	Granite Construction	$ 499,700.00
5.	Consolidated Paving	$ 563,359.77
6.	ACME	$ 698,673.50
	Engineer Estimate	$ 454,514.45

We have checked several references on Advanced Paving and we have also worked with their Operations Manager / Owner, Bart van der Stappen and their Project Manager, Justin Petty on several projects when they were with Kilgore Paving. They will be using Bowen Construction of Centerville for Utility and Concrete work, Maverik Milling for asphalt milling, and Bob's Tree Service for tree and stump removal.

It is recommended that the project be awarded to Advanced Paving and Construction in the amount of $ 410,977.53.

We have spoken with them this afternoon and their construction schedule is such that they would like to start construction within the next few weeks.

Let me know if additional information is needed.

Kevin

Kevin Campbell, P.E.
Centerville City Engineer

Kevin Campbell, P.E.
ESI Engineering, Inc
3500 S. Main St.
SLC, Ut 84115
801.263.1752

BID TABULATION FOR CENTERVILLE CITY

Street Rebuild and Overlay Project 2016 - #15-209				Advanced Paving		Staker Parson		Morgan Asphalt		Granite Construction		Consolidated Paving		ACME		Engineers Estimate	
Item No.	ITEM DESCRIPTION	QUANTITY	UNITS	UNIT PRICE	AMOUNT	UNIT PRICE	AMOUNT	UNIT PRICE	AMOUNT	UNIT PRICE	AMOUNT	UNIT PRICE	AMOUNT	UNIT PRICE	AMOUNT	UNIT PRICE	AMOUNT
1825 North - Main St. to 150 East Street Rebuild																	
1	Mill and haul asphalt to city location (approx. 6" thick) including saw-cut	543	CY	$16.50	$8,959.50	$21.65	$11,755.95	$10.10	$5,484.30	$26.00	$14,118.00	$24.80	$13,466.40	$10.10	$5,484.30	$8.00	$4,344.00
2	Lower valves and manholes prior to milling	4	EA	$200.00	$800.00	$102.00	$408.00	$150.00	$600.00	$375.00	$1,500.00	$362.25	$1,449.00	$550.00	$2,200.00	$300.00	$1,200.00
3	Remove and haul away existing base material (appox. 6" from roadway, 4" from sidewalk, and 4" from curb/gutter)	673	CY	$10.60	$7,133.80	$13.10	$8,816.30	$10.05	$6,763.65	$14.00	$9,422.00	$31.69	$21,327.37	$35.00	$23,555.00	$12.00	$8,076.00
4	Compact sub-grade and place stabilization geo-textile fabric 315 ST or equivalent	3,261	SY	$1.00	$3,261.00	$2.05	$6,685.05	$2.00	$6,522.00	$2.40	$7,826.40	$2.23	$7,272.03	$2.50	$8,152.50	$1.40	$4,565.40
5	New roadbase including gradation and compaction (8" for roadway, 4" for sidewalk, and 4" for curb/gutter)	1,850	TN	$21.70	$40,145.00	$21.45	$39,682.50	$18.45	$34,132.50	$27.00	$49,950.00	$26.12	$48,322.00	$27.35	$50,597.50	$18.00	$33,300.00
6	Remove and replace base material 12" deep to repair soft spots including geo-textile fabric 315 ST or equivalent as per Engineer	1,500	SF	$2.35	$3,525.00	$2.95	$4,425.00	$5.80	$8,700.00	$4.00	$6,000.00	$2.73	$4,095.00	$5.00	$7,500.00	$4.00	$6,000.00
7	New asphalt including compaction (3" thick, AC-20 DM 3/4")	569	TN	$63.50	$36,131.50	$55.60	$31,636.40	$60.50	$34,424.50	$64.00	$36,416.00	$65.88	$37,485.72	$65.00	$36,985.00	$62.00	$35,278.00
8	Remove 24" curb/gutter and replace with 30" curb/gutter including saw-cut as needed	1,757	LF	$22.00	$38,654.00	$17.90	$31,450.30	$29.00	$50,953.00	$29.00	$50,953.00	$22.25	$39,093.25	$28.20	$49,547.40	$28.00	$49,196.00
9	Remove concrete waterway	364	SF	$12.45	$4,531.80	$1.90	$691.60	$2.05	$746.20	$5.00	$1,820.00	$1.59	$578.76	$14.75	$5,369.00	$10.00	$3,640.00
10	Remove and replace concrete wheelchair ramp including saw-cut as needed (2 ramps)	300	SF	$10.00	$3,000.00	$9.05	$2,715.00	$10.10	$3,030.00	$8.00	$2,400.00	$8.82	$2,646.00	$19.75	$5,925.00	$16.00	$4,800.00
11	Remove and replace sidewalk including saw-cut as needed	7,000	SF	$5.50	$38,500.00	$4.05	$28,350.00	$5.66	$39,620.00	$6.00	$42,000.00	$4.93	$34,510.00	$7.50	$52,500.00	$6.00	$42,000.00
12	Remove and replace drive approach including saw-cut as needed	1,250	SF	$7.80	$9,750.00	$5.65	$7,062.50	$8.24	$10,300.00	$8.00	$10,000.00	$7.37	$9,212.50	$11.30	$14,125.00	$7.00	$8,750.00
13	Supply and install 12" SDR 35 storm drain pipe (including separation fabric)	670	LF	$33.20	$22,244.00	$32.75	$21,942.50	$40.95	$27,436.50	$35.00	$23,450.00	$33.64	$22,538.80	$112.50	$75,375.00	$25.00	$16,750.00
14	Supply and install 48" storm drain manhole	1	EA	$2,800.00	$2,800.00	$2,405.00	$2,405.00	$3,632.00	$3,632.00	$3,200.00	$3,200.00	$3,116.50	$3,116.50	$4,875.00	$4,875.00	$1,700.00	$1,700.00
15	Install new single hooded inlet box	5	EA	$2,325.00	$11,625.00	$1,600.00	$8,000.00	$1,710.00	$8,550.00	$3,200.00	$16,000.00	$2,271.25	$11,356.25	$1,750.00	$8,750.00	$2,000.00	$10,000.00
16	Install new double hooded inlet box	2	EA	$3,260.00	$6,520.00	$2,500.00	$5,000.00	$2,972.00	$5,944.00	$3,500.00	$7,000.00	$3,363.75	$6,727.50	$2,950.00	$5,900.00	$2,000.00	$4,000.00
17	Remove existing inlet box and replace with new hooded inlet box	3	EA	$275.00	$825.00	$348.00	$1,044.00	$1,500.00	$4,500.00	$400.00	$1,200.00	$402.50	$1,207.50	$950.00	$2,850.00	$2,500.00	$7,500.00
18	Import 1-1/2" gravel bedding	300	TN	$19.00	$5,700.00	$19.45	$5,835.00	$18.15	$5,445.00	$26.00	$7,800.00	$24.96	$7,488.00	$36.50	$10,950.00	$18.00	$5,400.00
19	Remove and haul away tree (dia 0-12")	13	EA	$345.00	$4,485.00	$218.00	$2,834.00	$573.00	$7,449.00	$370.00	$4,810.00	$894.35	$11,626.55	$400.00	$5,200.00	$500.00	$6,500.00
20	Remove and haul away stump (dia 0-12")	13	EA	$135.00	$1,755.00	$51.15	$664.95	$230.00	$2,990.00	$140.00	$1,820.00	$606.58	$7,885.54	$150.00	$1,950.00	$500.00	$6,500.00
21	Remove and haul away tree (dia. 12"-20")	15	EA	$580.00	$8,700.00	$218.00	$3,270.00	$802.00	$12,030.00	$625.00	$9,375.00	$1,299.50	$19,492.50	$700.00	$10,500.00	$800.00	$12,000.00
22	Remove and haul away stump (dia. 12"-20")	15	EA	$200.00	$3,000.00	$51.15	$767.25	$230.00	$3,450.00	$200.00	$3,000.00	$902.75	$13,541.25	$250.00	$3,750.00	$800.00	$12,000.00
23	Adjust water valve box and monuments to final grade with concrete collar	2	EA	$390.00	$780.00	$307.00	$614.00	$350.00	$700.00	$350.00	$700.00	$339.25	$678.50	$475.00	$950.00	$350.00	$700.00
24	Adjust manhole to final grade with concrete collar	2	EA	$550.00	$1,100.00	$461.00	$922.00	$520.00	$1,040.00	$450.00	$900.00	$425.50	$851.00	$525.00	$1,050.00	$450.00	$900.00
25	Remove North retaining wall (135 LF) and regrade back of sidewalk at slope 3:1 max.	1	Lump Sum	$1,140.00	$1,140.00	$2,660.00	$2,660.00	$1,860.00	$1,860.00	$1,700.00	$1,700.00	$20,850.47	$20,850.47	$15,500.00	$15,500.00	$8,000.00	$8,000.00
26	New 3' rock wall (3' dia. rocks) as per engineer	100	LF	$55.00	$5,500.00	$67.05	$6,705.00	$55.00	$5,500.00	$60.00	$6,000.00	$172.04	$17,204.00	$150.00	$15,000.00	$50.00	$5,000.00
27	Remove South retaining wall (120 LF) and regrade back of sidewalk at slope 3:1 max.	1	Lump Sum	$1,000.00	$1,000.00	$2,660.00	$2,660.00	$1,860.00	$1,860.00	$1,700.00	$1,700.00	$18,661.14	$18,661.14	$15,500.00	$15,500.00	$8,000.00	$8,000.00
28	Restore landscaping and sprinklers as needed. Regrade park-strip and new sod required in park-strip	1	Lump Sum	$7,785.00	$7,785.00	$21,500.00	$21,500.00	$23,500.00	$23,500.00	$27,000.00	$27,000.00	$32,257.50	$32,257.50	$22,075.00	$22,075.00	$5,000.00	$5,000.00

Item No.	ITEM DESCRIPTION	QUANTITY	UNITS	UNIT PRICE	AMOUNT	UNIT PRICE	AMOUNT	UNIT PRICE	AMOUNT	UNIT PRICE	AMOUNT	UNIT PRICE	AMOUNT	UNIT PRICE	AMOUNT	UNIT PRICE	AMOUNT
29	Mobilization and Traffic Control	1	Lump Sum	$15,500.00	$15,500.00	$53,449.49	$53,449.49	$24,000.35	$24,000.35	$17,203.74	$17,203.74	$17,859.50	$17,859.50	$33,500.00	$33,500.00	$20,000.00	$20,000.00
	Subtotal (Items 1-29)				**$294,850.60**		**$313,951.79**		**$341,163.00**		**$365,264.14**		**$432,800.53**		**$495,615.70**		**$331,099.40**
	1900 North, 100 East to 300 East - 2" Overlay																
30	Sweep Street	29,550	SF	$0.02	$591.00	$0.02	$591.00	$0.10	$2,955.00	$0.07	$2,068.50	$0.07	$2,068.50	$0.15	$4,432.50	$0.02	$443.25
31	Pavedry 381 or Mirafi Mirapave 400 geo-textile fabric including tack coat (not including overlap)	29,550	SF	$0.08	$2,364.00	$0.15	$4,432.50	$0.20	$5,910.00	$0.15	$4,432.50	$0.17	$5,023.50	$0.25	$7,387.50	$0.20	$5,910.00
32	2" thick asphalt overlay (AC-20 DM 3/4")	382	TN	$68.00	$25,976.00	$56.25	$21,487.50	$62.75	$23,970.50	$66.00	$25,212.00	$67.33	$25,720.06	$67.50	$25,785.00	$62.00	$23,684.00
33	Remove and replace curb and gutter (24" wide) including saw-cut as needed	363	LF	$22.20	$8,058.60	$30.70	$11,144.10	$30.25	$10,980.75	$32.00	$11,616.00	$23.26	$8,443.38	$38.20	$13,866.60	$28.00	$10,164.00
34	Remove and replace concrete waterway including saw-cut as needed	670	SF	$12.45	$8,341.50	$13.60	$9,112.00	$10.60	$7,102.00	$15.00	$10,050.00	$11.24	$7,530.80	$14.75	$9,882.50	$10.00	$6,700.00
35	Remove and replace concrete wheelchair ramp including saw-cut as needed	1,300	SF	$10.00	$13,000.00	$11.25	$14,625.00	$7.44	$9,672.00	$8.00	$10,400.00	$7.00	$9,100.00	$19.75	$25,675.00	$6.50	$8,450.00
36	Remove and replace sidewalk including saw-cut as needed	292	SF	$6.10	$1,781.20	$7.45	$2,175.40	$8.50	$2,482.00	$7.00	$2,044.00	$6.10	$1,781.20	$12.50	$3,650.00	$5.00	$1,460.00
37	Remove and replace existing asphalt (4" thick) including saw-cut	4,000	SF	$2.35	$9,400.00	$4.15	$16,600.00	$2.71	$10,840.00	$3.00	$12,000.00	$3.04	$12,160.00	$7.50	$30,000.00	$5.00	$20,000.00
38	Adjust water valve box and monuments to final grade with concrete collar	6	EA	$560.00	$3,360.00	$307.00	$1,842.00	$350.00	$2,100.00	$350.00	$2,100.00	$339.25	$2,035.50	$475.00	$2,850.00	$325.00	$1,950.00
39	Adjust manhole to final grade with concrete collar	3	EA	$390.00	$1,170.00	$461.00	$1,383.00	$500.00	$1,500.00	$450.00	$1,350.00	$425.50	$1,276.50	$525.00	$1,575.00	$400.00	$1,200.00
40	Restore landscaping and sprinklers as needed	1	Lump Sum	$1,335.00	$1,335.00	$1,535.00	$1,535.00	$1,700.00	$1,700.00	$6,300.00	$6,300.00	$6,900.00	$6,900.00	$4,750.00	$4,750.00	$2,000.00	$2,000.00
41	Mobilization and Traffic Control	1	Lump Sum	$3,200.00	$3,200.00	$6,290.00	$6,290.00	$8,000.75	$8,000.75	$4,000.00	$4,000.00	$4,623.00	$4,623.00	$7,500.00	$7,500.00	$2,000.00	$2,000.00
	Subtotal (Items 30-41)				**$78,577.30**		**$91,217.50**		**$87,213.00**		**$91,573.00**		**$86,662.44**		**$137,354.10**		**$83,961.25**
	Willow Valley Drive (1600 N.) - 575 West to 400 West - 2" Overlay																
42	Sweep Street	19,413	SF	$0.030	$582.39	$0.020	$388.26	$0.100	$1,941.30	$0.070	$1,358.91	$0.070	$1,358.91	$0.150	$2,911.95	$0.015	$291.20
43	Pavedry 381 or Mirafi Mirapave 400 geo-textile fabric including tack coat (not including overlap)	19,413	SF	$0.08	$1,553.04	$0.15	$2,911.95	$0.20	$3,882.60	$0.15	$2,911.95	$0.16	$3,106.08	$0.25	$4,853.25	$0.20	$3,882.60
44	2" thick asphalt overlay (AC-20 DM 3/4")	251	TN	$70.00	$17,570.00	$56.10	$14,081.10	$63.85	$16,026.35	$66.00	$16,566.00	$67.33	$16,899.83	$67.50	$16,942.50	$60.00	$15,060.00
45	Remove and replace existing asphalt (4" thick) including saw-cut	2,000	SF	$2.40	$4,800.00	$4.45	$8,900.00	$2.81	$5,620.00	$3.00	$6,000.00	$3.22	$6,440.00	$7.50	$15,000.00	$5.00	$10,000.00
46	Remove and replace curb and gutter including saw-cut as needed	30	LF	$35.60	$1,068.00	$35.80	$1,074.00	$56.00	$1,680.00	$40.00	$1,200.00	$40.25	$1,207.50	$38.20	$1,146.00	$28.00	$840.00
47	Remove and replace concrete wheelchair ramp including saw-cut as needed	300	SF	$10.00	$3,000.00	$11.25	$3,375.00	$8.87	$2,661.00	$8.00	$2,400.00	$10.54	$3,162.00	$19.75	$5,925.00	$6.50	$1,950.00
48	Remove and replace sidewalk including saw-cut as needed	96	SF	$7.20	$691.20	$12.15	$1,166.40	$14.20	$1,363.20	$6.00	$576.00	$5.63	$636.48	$12.50	$1,200.00	$5.00	$480.00
49	Adjust water valve box and monuments to final grade with concrete collar	6	EA	$390.00	$2,340.00	$307.00	$1,842.00	$350.00	$2,100.00	$350.00	$2,100.00	$339.25	$2,035.50	$475.00	$2,850.00	$325.00	$1,950.00
50	Adjust manhole to final grade with concrete collar	5	EA	$500.00	$2,500.00	$461.00	$2,305.00	$500.00	$2,500.00	$450.00	$2,250.00	$425.50	$2,127.50	$525.00	$2,625.00	$400.00	$2,000.00
51	Restore landscaping and sprinklers as needed	1	Lump Sum	$445.00	$445.00	$1,535.00	$1,535.00	$1,700.00	$1,700.00	$3,500.00	$3,500.00	$2,300.00	$2,300.00	$4,750.00	$4,750.00	$1,000.00	$1,000.00
52	Mobilization and Traffic Control	1	Lump Sum	$3,000.00	$3,000.00	$5,565.00	$5,565.00	$8,000.55	$8,000.55	$4,000.00	$4,000.00	$4,623.00	$4,623.00	$7,500.00	$7,500.00	$2,000.00	$2,000.00
	Subtotal (Items 42-52)				**$37,549.63**		**$43,143.71**		**$47,475.00**		**$42,862.86**		**$43,896.80**		**$65,703.70**		**$39,453.80**
	Total (Items 1-52)				**$410,977.53**		**$448,313.00**		**$475,851.00**		**$499,700.00**		**$563,359.77**		**$698,673.50**		**$454,514.45**

GARY R. HERBERT
Governor
SPENCER J. COX
Lieutenant Governor

State of Utah
DEPARTMENT OF NATURAL RESOURCES
MICHAEL R. STYLER
Executive Director
Division of Forestry, Fire and State Lands
BRIAN L. COTTAM
Division Director / State Forester

MEMORANDUM

TO: Centerville City

FROM: Scott Zeidler, Area Forester, ISA Certified Arborist

DATE: 4/19/2016

SUBJECT: Park-strip tree planting, 1825 North Street

If park-strip is wide enough to be eligible to plant trees:

1) Select tree species and cultivars that have either a columnar, semi-columnar, full crown or vase-like form that can be pruned to a height of 13 feet above the street and 8 feet above the sidewalk.
2) When planting, located the tree trunk at the center point of the park-strip width.
3) Avoid the placement of clay and silt soil into the park-strip where trees will be grown. Avoid over-compaction of soils in the park-strip.
4) Following construction work, soils in the park-strip should be loosened to a depth of 18 inches to allow adequate soil oxygen and water infiltration which helps foster deep roots.
5) Utilize a few species of trees to prepare for mortality arising from storm damage, insect attack, and disease.

Potential Tree Species
Japanese flowering cherry, *Prunus serrulata*
Flowering crabapple, *Malus spp. (select a variety resistant to powdery mildew disease)*
Paperbark maple, *Acer griseum*
Japanese tree lilac, *Syringa reticulata*
Eastern hophornbeam, *Ostrya virginiana*
Amur maackia, *Maackia amurensis*
Sourwood, *Oxydendrum arboretum*

Selection attributes: medium to high salt tolerance, slow to medium growth rate.

1594 West North Temple, Suite 3520, PO Box 145703, Salt Lake City, UT 84114-5703
telephone (801) 538-5555 • facsimile (801) 533-4111 • TTY (801) 538-7458 • *www.forestry.utah.gov*

CENTERVILLE
CITY COUNCIL
Staff Backup Report
4/19/2016

Item No. 4.

Short Title: Direction re County property on 100 South

Initiated By: Davis County

Scheduled Time: 7:40

SUBJECT

RECOMMENDATION

Staff does not recommend the City purchase this property, but recommends the County preserve the channel and sedimentation basin with easements when the property is sold. If the Council wants to consider the possibility of purchasing the property, they should provide direction for additional study, as appropriate, in order to make a decision within the 60-day deadline provided by Davis County officials, which expires on or about May 15.

BACKGROUND

At the March 15, 2016 City Council meeting, Davis County officials reported they had declared the County-owned property on 100 South to be "surplus property" and that they intended to sell the property through a public bidding process (see attached minutes of the 3/15/2016 meeting). They provided the attached "Historical Summary" pertaining to this property. They agreed to wait 60 days before proceeding with the bidding process, to give the City Council some time to consider whether to pursue the acquisition of this land.

In 1997 the Centerville City Council approved a Lease Agreement (attached) with Davis County pertaining to the use of this land at approximately 600 East 100 South, referenced in the Lease as the "Deuel Creek Debris Basin". The property (approx. 2 acres--see attached aerial photo) contains a basin constructed in the 1980's for the purpose of capturing debris and sediment from Deuel Creek flows. The Lease gives the City permission to use the land as a "passive park". The initial term of the Lease was ". . . for two years and shall continue thereafter until terminated by either party upon written notice of termination to the other party at least ninety (90) days prior to the effective date of such termination." (Section 2) The County gave the City notice of termination of the Lease in October 2014. At that time the City Manager reported the receipt of this notice to the City Council.

Section 8 of the terminated Lease Agreement describes the City's option to purchase, as follows:

- "In the event the County declares the Property to be surplus property, it will notify the City so that the City may participate in the public bidding process outlined in the Davis County Ordinances."

The City Engineer and Public Works Director will be present to answer questions from the City Council about this property.

ATTACHMENTS:

Description

- 3/15/2016 CC Minutes
- Historical Summary re 100 South Property
- 1997 Lease Agreement
- Aerial photo of area

the standards for remaining a Tree City USA should be considered. Councilwoman Fillmore presented research on the value of trees, and suggested putting together a citizen tree board.

Kevin Campbell, City Engineer, explained the 1825 North project will be bid during the second week of April, and will include removal of trees. Tree replacement, if desired, could be handled with a separate bid. He pointed out that the standard 4-foot wide park strip is not typically wide enough for trees. The Mayor pointed out that the Council will meet with the Planning Commission in a work session next week, and asked if staff could have a recommendation put together in time for the work session. Mr. Thacker responded that the Planning Commission and Council could discuss whether such a process is a priority. Mayor Cutler said he feels trees add value and beauty to the city, and that any plans should encourage the planting of trees in appropriate locations. Councilman McEwan said he feels it is an education issue. The Council should let the citizens know the issues and economic costs associated with the decision to avoid appearing heavy handed. Mr. Randall agreed that education is important.

SALE OF DRAINAGE BASIN PROPERTY ON 100 SOUTH

County Commissioner Bret Millburn introduced Barry Burton, Director of Community and Economic Development, and Tony Thompson, County Property Manager. He gave a history of the County-owned property on 100 South, beginning with the County purchase of the property from Centerville City in 1984 for $102,000 for use as a debris basin. In April 1997 the County and City reached an agreement for the City to lease a portion of the property as park space, which was renewed in two-year increments until 2008. In September 2008, a portion of the property was sold to Dale Engberson to extend his adjoining property. In 2011, with completion of the debris basin farther up the canyon, 200 homes were taken out of the FEMA flood zone. The County has now determined the property is no longer needed for flood control based on the debris basin completed in 2011. Commissioner Millburn stated a notice of termination was sent to the City, and an appraisal obtained. In March 2015, the as-is appraised value of the property was $440,000. The County declared the property as surplus on March 8, 2016. Mr. Thompson explained options for the property considered by the County. It is the County's intention to maintain an easement for stream access. Commissioner Millburn emphasized that the County has carefully considered the property, and he looks forward to working with the city for the best possible outcome.

Councilwoman Ivie asked what the as-is appraisal assumes. Commissioner Millburn responded that the purchaser would be responsible to work with the city and improve the property as needed to use it. The property is currently in a Public Facility Zone. The Master Plan shows an eventual Residential-Low Zone. Mr. Thompson stated the appraisal assumes Residential-Low density. Commissioner Millburn said the County has not discussed specific details of the proposed easement for the channel and basin. He informed the City that the flood control structure on the property was last inspected by the State in 2003, and is no longer recognized as a detention structure. Mr. Thacker mentioned that the County Public Works Director has estimated sediment would probably only need to be removed every 10 years or so. Commissioner Millburn agreed that an easement makes sense. Councilwoman Fillmore said it seems that settling easement matters would come prior to sale of the property. Commissioner Millburn responded the easement would not be more than 10-15 feet, with maybe 30 feet in the basin area.

Councilman McEwan made a **motion** to acknowledge termination of the lease agreement, and state the intention to continue to work with the County regarding the easement, but not exercise the right to purchase the property at this time. Councilman Ince seconded the motion. Mayor Cutler agreed that it is a beautiful property, but responding to the suggestion that

the City purchase the property, he expressed the concern that City funds would be better spent investing in other park needs. He commented that the city owns property at the top of 100 South, and could possibly work with the County for a larger, more open park space at that location. Commissioner Millburn responded there could be an opportunity for the County to develop something with the City at the top of 100 South. Councilwoman Fillmore stated the Parks and Recreation Committee should be consulted if the Council considers purchasing the property for park space. She shared comments from the Parks and Recreation Committee regarding the possibility, including the idea that, if purchased by the City, it should become something unique for the benefit of all citizens. She mentioned that the neighboring property owners have expressed a desire for the property to remain as it is, and so city-wide use might not be what they desire. Councilman Ince agreed with recognizing termination of the lease, but said he would like to see the process move slower. He mentioned the need for more cemetery space in the city. Councilman McEwan responded he feels the Council has an obligation to provide maximum value to the citizens for money spent. He said this property, in his opinion, would not provide maximum value for all citizens.

Councilwoman Mecham said she has many questions to have answered before feeling comfortable declining to purchase the property. Commissioner Millburn stated the City Council was given notice regarding the property in October 2014. The Council did not take action on the issue at that time. Councilman McEwan withdrew his motion. Commissioner Millburn and Mr. Thompson indicated they are willing to wait 60 days for the Council to consider and make a final decision. Mr. Thompson said the sale will be posted on the property, and in the newspaper, with a courtesy notice sent to the city. He said they may explore other options, but will not list the property through a real estate brokerage.

Mayor Cutler allowed Centerville citizen Lee Skabelund to comment. Mr. Skabelund stated that Community Development Director Cory Snyder said at a previous meeting it is illegal to appraise a property for anything but the current zoned use. He said it is his understanding that no evidence has been produced to prove the original purchase payment was made. He stated the 2011 debris basin will not collect water; the water will continue down the stream bed, collecting more debris. He mentioned the findings of a hydrologist report, and stated the property is a sediment basin – a public land that can never be replaced when lost. Mr. Skabelund expressed frustration with the apparent determination to build on any vacant property no matter the size and shape.

Commissioner Ince asked about the professional reports that seem to show conflicting opinions. Mr. Thompson responded that the proposed easement would be to maintain the existing structure. The County would maintain the structure and spillway. All building permits would be examined to ensure the stream will continue to flow as intended. The appraisal was obtained through a licensed third party. Mr. Thompson said he is not aware of any issues with the appraisal. Commissioner Millburn pointed out the County could take the stance that no easement is needed, and remove the existing structure. However, the County is willing to maintain an easement and clean out the sediment every 10 years or so. He stated that experts can be found on all sides of any given issue. The role of elected officials is to take the information and try to make the best decision possible. Councilwoman Ivie asked for clarification regarding the parameters of the appraisal. Commissioner Millburn stated he will provide a copy of the appraisal to the Council. Mayor Cutler said it seems appropriate to request a formal recommendation from the City Public Works Department regarding the easement. Councilman McEwan added it would be beneficial to have calculations regarding usable green space from the Planning Commission in the next 60 days. Commissioner Millburn expressed appreciation for the open communication with the Council. As a citizen of Centerville, he expressed appreciation for the thought and analysis given by the Council when making decisions. He added he does not think the City purchasing the subject property would

be the best use of tax dollars. Responding to a question from the audience, Commissioner Millburn stated the Sons of Utah Pioneers monument on the property would be preserved.

The Council took a break from 9:04 p.m. to 9:15 p.m.

PROPOSAL TO EXTEND 4TH OF JULY PARADE ROUTE

Phil and Mary Walters, Co-chairs for this year's 4th of July parade, have proposed extending the parade route half a mile by beginning the parade near 1450 North Main Street rather than at Chase Lane. Mr. Walters stated he has already obtained permission to use the two church parking lots at 1450 North to stage the parade. Mr. Thacker reported that Police Chief Child evaluated the proposal and stated the extension would require more personnel, but would allow Chase Lane to remain open until the parade begins, and allow better east/west access for vehicles. Mr. Walters commented that the City's population has grown significantly over the last 20 years, and additional viewing space would remove some of the stress associated with the parade. Mayor Cutler stated he feels it is worth trying. Councilwoman Ivie said she is concerned with how the length of the parade would affect the enthusiasm of the participants. She said if the parade is too long, the hometown feel would be lost with groups riding rather than performing in the street. Mr. Walters responded he has spoken with some of the groups that usually participate and has not received any negative feedback. Councilman Ince said it was his perception that not many people were sitting at the end of the parade last year, and suggested it would make sense to begin the parade at 1450 North and end the parade at Centerville Junior High School instead of Pages Lane. Councilwoman Ivie responded that a lot of citizens sit around the corner at Pages Lane. Mayor Cutler added that a lot of space is needed to facilitate the end of the parade. More space is available at Pages Lane than at the Junior High. The Council discussed the Walters' proposal. Councilwoman Ivie said she believes there are plenty of spaces available to watch the parade; the issue is one of education – letting the citizens know that more space is available at the south end. Councilwoman Fillmore stated she would be comfortable leaving the decision and details to the parade Chairs, and said she could support experimenting with the length this year. She asked how the length of the Centerville parade compares to other small-town parades. Mr. Walters stated the extended parade length would be two miles. Ms. Walter commented they are considering moving some of the announcing stands to the west side of Main Street to open more seating on the east side. Councilwoman Ivie suggested the Walters consider a set playlist for the announcing booths, to ensure appropriate music. The Walters agreed to consider the suggestion. The Mayor and Council thanked the Walters for all they are doing.

SOLID WASTE COLLECTION CONTRACT

Mayor Cutler reported that ACE has been slow in responding to the City regarding contract negotiation. Councilman McEwan stated the slowness has emphasized for him the need to go out to bid. He suggested the Council issue an RFP without including recycling, since the City's recycling has ended up at the landfill lately with recycling centers not accepting deliveries. Councilman Ince commented that two residents have asked him for a report of how effective the City's recycling has been. Mayor Cutler said he believes the current difficulties with the recycling industry are a short-term problem. Councilman McEwan stated the city should not require residents to pay for a service they are not getting, and added he is not confident it is a short-term problem. Councilwoman Fillmore suggested that, considering the time restraint, the Council renew with ACE for a shorter period of time and continue to do research before making the decision to completely discontinue recycling. Councilman McEwan referred to former Councilman Higginson's report, as the City's liaison to the Waste Management District, that the recycling industry will not rebound for another 2-3 years. Councilman McEwan stated he believes recycling is a good thing, but at this point he feels a huge amount of effort by citizens to

Deuel Creek Basin 641 E 200 S Centerville, Utah TID 02-104-0100

- May 1984, Davis County purchased the property 2.167 acres from Centerville City for $102,000.
- October 1991, Davis County sells 0.125 acre of property to Centerville City for $4,500.00, also reserving an easement for access to basin.
- January 1996, Centerville City proposes a 10 year lease agreement for a park on the property with an "Option to purchase" as paragraph "8" requesting the City shall be given the option to purchase the property at fair market value at the time of purchase. (word\deuel.lse 12/11/95)
- January 1997, Centerville City proposes a 2 year lease agreement for a park on the property also with paragraph "8" requesting and "Option to purchase. (Deuellse.agr 1/07/97)
- April 1, 1997, County revises lease agreement and delivers draft to Centerville City. Paragraph "8" revised to provide for disposal of property in accordance with County ordinances.
- April 11, 1997, City receives a letter of review of draft from Law Offices of Mazurn & Hayes.
- April 21, 1997, Davis County enters into a Lease Agreement with Centerville City. (Davis County Contract No. 97-109)
- June 2000, Agreement with the Sons of Utah Pioneers for a Grist Mill Memorial.
- September 2008, Davis County surpluses and sells 0.0253 acre of this property to Dale Engberson. (Davis County Contract 2008-217)
- May 2011, Davis County completes a new debris flow structure up stream of basin. ($1.59M)
- August 2011, FEMA issues a Letter of Map Revision (LOMR) covering property and revising it from a "Zone X" to a "Zone A". This LOMR covers more than 200 properties in Centerville.
- October 2014, Davis County signs and sends a Notice of Termination of Lease Agreement to Centerville City. (Davis County Contract 1997-109A)
- March 2015, Davis County receives an Appraisal of the property with an As Is-Market Value of $440,000.
- March 8, 2016, Davis County declared this property as surplus.

DOCUMENT SCANNED

97-109

LEASE AGREEMENT

THIS LEASE AGREEMENT is made and entered into this 21 day of April, 1997, by and between CENTERVILLE CITY, a municipal corporation, whose mailing address is 250 North Main Street, Centerville, Utah, 84014, hereinafter the "City," and DAVIS COUNTY, whose mailing address is P.O. Box 618, Farmington, Utah, 84025, hereinafter the "County."

RECITALS

WHEREAS, Davis County owns property and facilities within Centerville City known as the Deuel Creek Debris Basin, which property is used as a debris basin and consists largely of open space; and

WHEREAS, Centerville City desires to lease a portion of the Debris Basin property from the County and to develop such property for parks and recreation purposes; and

WHEREAS, the County is willing to lease such property to the City and permit the City to develop the property for parks and recreation purposes in accordance with the provisions set forth herein.

NOW, THEREFORE, in consideration of the mutual covenants contained herein, and other good and valuable consideration, the receipt and sufficiency of which is hereby acknowledged, the parties hereby agree as follows.

1. Leased Premises. The County hereby leases to the City and the City hereby leases from the County that certain real property located in Davis County, State of Utah, consisting of approximately 2.04 acres, hereinafter referred to as the "Property," and described as follows:

Beginning at a point on the north line of 200 South Street a 50 foot wide street which is South 89°56'56" East 858.0 feet and North 0°28'15" East 28.5 feet from the Centerville City monument marking the centerline of 200 South Street and 400 East Street; and running thence North 89°57'50" East 329.30 feet, thence North 2°16'00" West 125.97 feet, thence South 86°56'20" West 32.86 feet, thence North 3°03'40" West 20.00 feet to a chain link fence, thence North 8°48'10" East 143.89

feet along said chain link fence, thence South 89°59'04" West 310.10 feet, thence South 0°28'15" West 286.41 feet to the point of beginning. Said property is part of Block 15 in Plat "A", Centerville Townsite Survey, and one half of platted road west of Block 15.

2. Term. The initial term of this Agreement shall be for two (2) years, and shall continue thereafter until terminated by either party upon written notice of termination to the other party at least ninety (90) days prior to the effective date of such termination.

3. Rent. In consideration of this Lease Agreement, the City shall pay to the County a one-time lump sum payment for the entire term of this Agreement in the amount of ten dollars ($10.00).

4. Improvements. The City shall have the right, at the City's expense, to develop the Property for park and recreation purposes, provided that prior approval of all such development shall first be obtained from the County (hereinafter "Improvements"). The City shall have the right, in its sole discretion, to determine what, if any, Improvements it wishes to make to the Property. The City agrees that all development of the Property by the City shall be in accordance with the provisions and limitations of the County's ordinances, rules, and regulations. The City further covenants to comply with all applicable Federal and State laws, including all requirements for obtaining any necessary permits and/or approvals, prior to development of the Property by the City. The County hereby grants approval to the City to develop the Property as set forth in the Passive Park Master Plan, attached hereto as Exhibit "A," and incorporated herein by this reference.

5. Maintenance. The City shall be responsible for all maintenance and upkeep of any and all Improvements constructed or placed upon the Property by the City, including weed control. All Improvements shall be maintained in a safe and proper condition.

6. Use. The City shall be entitled to use and occupy the Property for public park and recreation purposes, which use shall not impair or conflict with the primary purpose of the Property

as a debris basin. The City shall not make any illegal use of the Property.

7. Ownership. Unless otherwise agreed in writing signed by the parties, the County shall retain fee title ownership of the Property and the City shall retain ownership of all Improvements placed upon the Property by the City during the term of this Lease. The City shall have the right to remove any equipment or Improvements located on the Property by the City at any time prior to expiration or termination of the Lease, provided that such removal does not interfere with the County's use of the Property as a debris basin and/or does not leave the Property in an unsafe condition. Unless otherwise agreed in writing signed by the parties, at the expiration or termination of this Lease, any remaining Improvements located upon the Property shall become the property of the County.

8. Option to Purchase. In the event the County declares the Property to be surplus property, it will notify the City so that the City may participate in the public bidding process outlined in the Davis County Ordinances.

9. Indemnification. Except for negligence of the County, its officers, employees, representatives, agents and sureties, the City hereby agrees to indemnify and hold the County, its officers, employees, representatives, agents, and sureties harmless from and against any and all loss, liability, expense, claims and damages arising out of the City's use of the Property and Improvements thereon for recreational purposes. This indemnification includes any claim against the County for damage, loss, or injury suffered by the public while using the Property and Improvements thereto for recreational purposes.

10. Notices. All notices required or desired to be given during the term of this Lease shall be delivered personally or sent by certified mail, return receipt requested, postage prepaid to the other party at the parties' respective addresses set forth hereinabove.

11. Surrender of the Property. The City agrees to surrender the Property to the County at the termination of the tenancy herein created, or any extension thereof, in good order, reasonable use and wear and tear thereof excepted.

12. Holding Over. If the City shall hold the Property after the expiration of the term hereof with the consent of the County, express or implied, such holding over shall constitute a month to month tenancy, subject to the terms and conditions of this Agreement, including the ninety (90) days notice of termination.

13. Entire Agreement. This Lease constitutes the entire agreement and understanding between the parties hereto with respect to the subject matter hereof and supersedes all prior agreements, promises, representations or warranties with respect to the subject matter hereof.

14. Amendment. This Lease may not be altered or amended except by subsequent written agreement executed by all of the parties hereto.

15. Severability. If any section, clause or portion of this Lease is declared invalid by a court of competent jurisdiction, the remainder shall not be effected thereby and shall remain in full force and effect.

16. No Business Relationship. The parties agree that this Lease is not intended to and does not create any agency, joint venture, partnership or other relationship or business association of any kind between the parties.

17. Binding Effect. This Lease and the covenants and terms and conditions hereof shall be binding upon, and inure to the benefit of, the parties hereto and their respective officers, employees, representatives, and successors in interest.

18. Portion Withdrawal. The parties hereto agree that the County may withdraw any portion of the leased premises from the terms and conditions of this Lease by giving sixty (60) days written notice to the City designating which portion or portions of the leased Property is being withdrawn.

IN WITNESS WHEREOF, the parties hereto have executed this Lease by and through their duly authorized representatives as of the day and year first hereinabove written.

"COUNTY"
DAVIS COUNTY

Chairman, Davis County Commission

ATTEST:

County Clerk/Auditor

Approved as to Form:

Office of Davis County Attorney

"CITY"
CENTERVILLE CITY

Mayor

ATTEST:

Deputy City Recorder

Office of Centerville City Attorney

CENTERVILLE CITY, UTAH
1848
CORPORATE SEAL

EXHIBIT "A"

Passive Park Master Plan

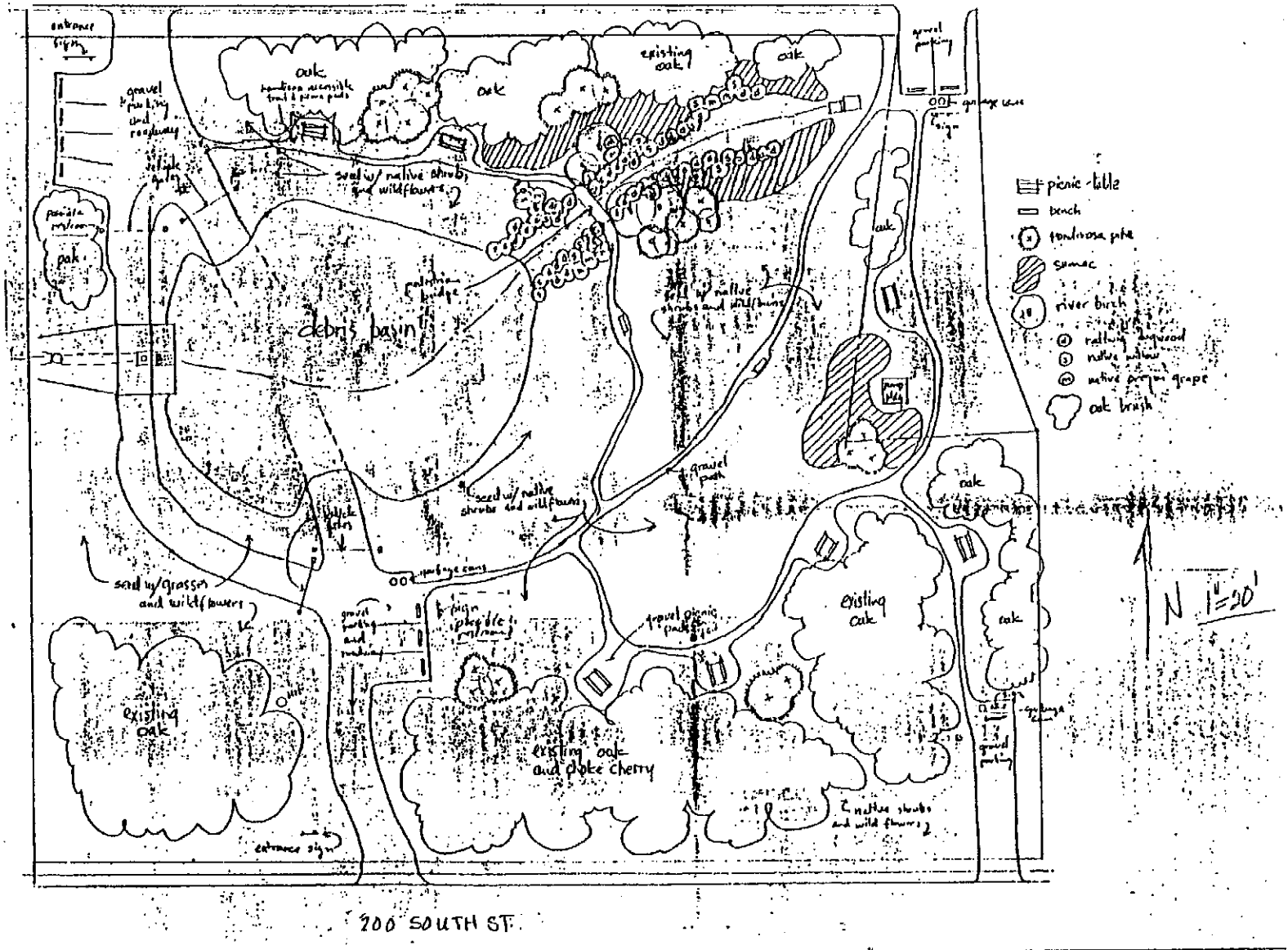

Centerville City Davis County	1"=20'-0" north	Deuel Creek Debris Basin PASSIVE PARK - site design

7/31/15
David C. Oh

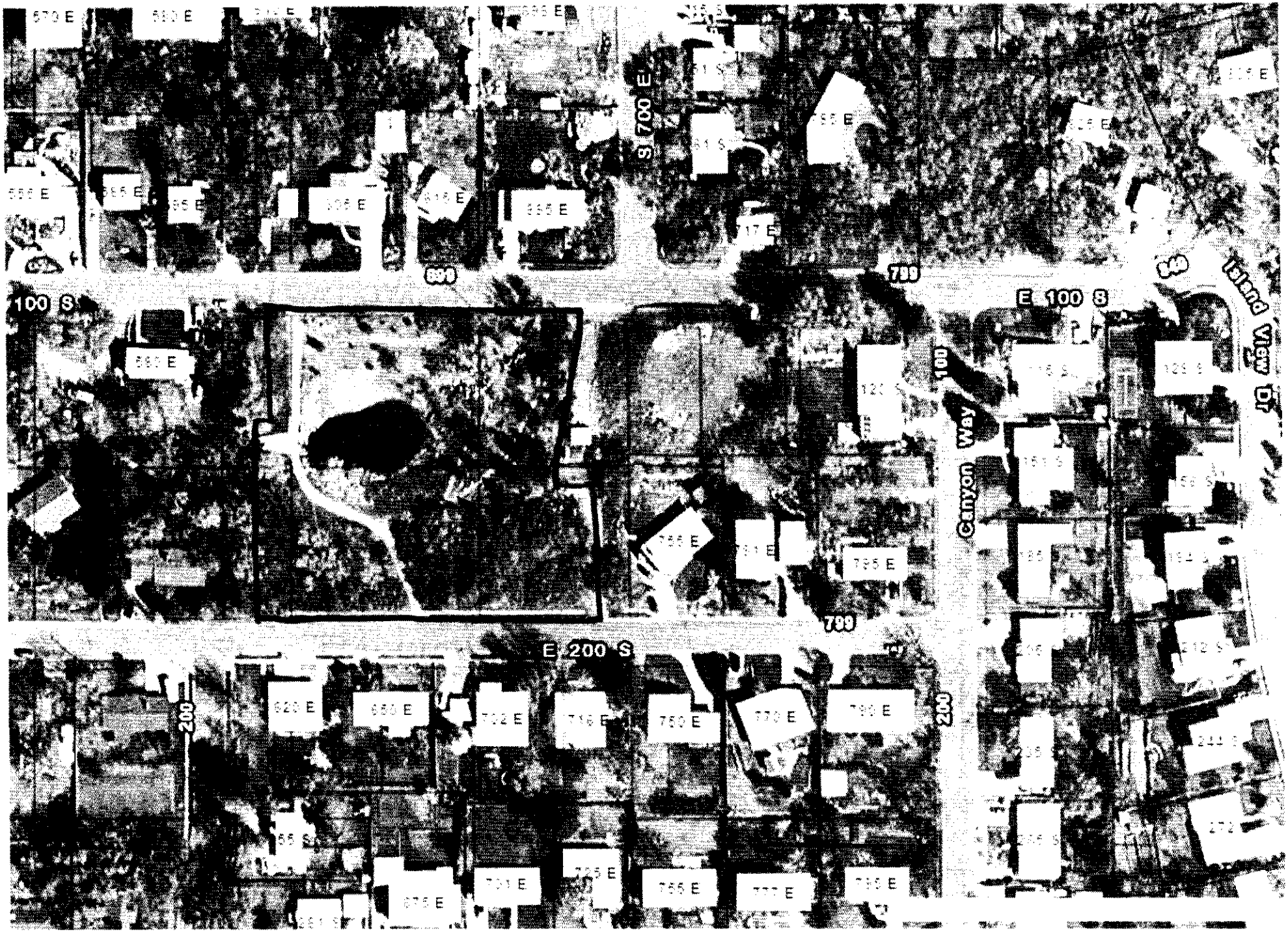

S 700 E
100 S
E 100 S
E 200 S
Canyon Way
Island View Dr
200
100
799

CENTERVILLE
CITY COUNCIL
Staff Backup Report
4/19/2016

Item No. 5.

Short Title: Cost-sharing agreement with Maverik regarding Trailhead Improvements at 1250 West Parrish Lane

Initiated By:

Scheduled Time: 8:00

SUBJECT

RECOMMENDATION

Approve cost-sharing agreement with Maverik regarding trailhead improvements at 1250 West Parrish Lane, subject to the approval of funding from the Redevelopment Agency for the City's share of the cost.

BACKGROUND

The attachments include the proposed Agreement, Cost Estimate for the trailhead improvements, Decorative Concrete Specifications from the City Engineer, and the 1250 West Trailhead Landscape Package prepared by the City's landscape architect, Dan Sonntag of MGB+A. Appropriate documents for Exhibit B to the Agreement would be taken from the latter three documents, based on staff's judgment as to what is needed for that purpose.

ATTACHMENTS:

Description

- Maverik Trailhead Agreement
- Cost Estimate
- Decorative Concrete Specs
- 1250 West Trailhead Landscape Package

When recorded, return to:

Centerville City
Attn: City Recorder
250 North Main Street
Centerville, Utah 84014

Effects Parcel: 06-380-0001[LR21]

TRAILHEAD COST SHARING, MAINTENANCE AND EASEMENT AGREEMENT BETWEEN CENTERVILLE CITY AND MAVERIK, INC.

THIS TRAILHEAD COST SHARING, MAINTENANCE AND EASEMENT AGREEMENT ("Agreement") is made and entered into as of the _____ day of April, 2016, by and between **CENTERVILLE CITY**, a Utah municipal corporation ("City"), **CENTERVILLE REDEVELOPMENT AGENCY,** a community redevelopment agency ("RDA"), and **MAVERIK, INC.,** a Wyoming corporation ("Maverik").

RECITALS:

A. Maverik owns approximately 1.1473 acres[LR22] of real property located at the southwestern corner of Parrish Lane and 1250 West in Centerville City, Davis County, State of Utah, known as Lot 1A of the Legacy Trail Subdivision (First Amendment), as more particularly described in **Exhibit**[LR23] **A** (the "Maverik Property"); and

B. The Maverik Property is located within the Legacy Trails Subdivision (First Amendment) and is subject to all conditions of approval set forth in Ordinance No. 2014-06 for the Legacy Trails PDO Rezone approval and Conceptual Site Plan acceptance by the City Council on March 19, 2014, as amended ("PDO Rezone/Concept Plan Approval"); and

C. The Maverik Property is located within and subject to all provisions of the Parrish Lane Gateway Design Guidelines as set forth in Chapter 12-63 of the Centerville Zoning Code, as amended, including Subsection 12-63-040(b)(2) which provides *"[c]omfortable and attractive amenities such as benches, tables, drinking fountains, trash receptacles, information kiosks, plazas, fountains, etc., should be provided for public enjoyment and comfort*"; and

D. Maverik received Final Site Plan approval for development of the Maverik Property as a convenience store with fuel sales, as approved by the Centerville Planning Commission on October 28, 2015, subject to various terms and conditions of approval, as amended ("Final Site Plan Approval"), including the requirement that the development comply with and *"[m]eet the PDO Rezone/Conceptual Site Plan approval requiring the use of a Legacy Trail Development site feature at the corner of 1250 West and Parrish Lane"*; and

E. Maverik and the City desire to work together to finance and construct a trailhead/bike rest area as part of the development of the Maverik Property to provide for public enjoyment and comfort in accordance with the Parrish Lane Gateway Design Standards and to function as the required site feature at the Parrish Lane Intersection in accordance with the conditions of Final Site Plan Approval; and

F. The purpose of this Agreement is to contractually reduce to writing the respective agreements and understandings of the parties regarding the installation, cost, maintenance and ownership of the improvements and betterments at the southwest corner of the Parrish Lane Intersection and to provide an easement to the City for the operation of such improvements.

AGREEMENT:

NOW, THEREFORE, in consideration of the mutual covenants contained herein, and other good and valuable consideration, the receipt and sufficiency of which are hereby acknowledged, the parties agree as follows:

1. **Incorporation of Recitals.** The above Recitals are hereby incorporated into this Agreement.

2. **Trailhead Improvements.** The trailhead/bike rest area improvements for the southwest corner of the Parrish Lane Intersection adjacent to the Maverik Property shall consist of colored concrete, seat wall, pavilion, drinking fountain, kiosk, bench, bike fix station with pump, and other features, as more particularly reflected and described in the attached design development level drawings and specifications prepared by MGB+A as set forth in **Exhibit B** ("Trailhead Improvements").

3. **Design for Trailhead Improvements.** The City agrees to pay MGB+A for the preparation of the design development level drawings and specifications for the Trailhead Improvements. These architectural and design costs to be paid for by the City shall not be considered part of the cost share arrangement, but shall be paid solely by the City. Maverik agrees to pay for and to prepare final construction and engineering drawings for the Trailhead Improvements incorporating the design development level drawings and specifications prepared by MGB+A.

4. **Bidding.** Maverick agrees to prepare all bidding documents and to bid the work for the installation of the Trailhead Improvements as part of the development of the Maverik site and to pay all costs associated with bidding for the Trailhead Improvements. These construction, engineering and bidding costs to be paid by

Maverik shall not be considered part of the cost share arrangement, but shall be paid solely by Maverik.

5. **Cost Sharing for Trailhead Improvements.** The City and Maverik agree to share equally on a 50/50 basis the cost of the Trailhead Improvements as shown in **Exhibit B,** including, but not limited to, the colored concrete, seat wall, pavilion, drinking fountain, kiosk, bench, bike fix station with pump, and other features. The landscape architect's estimated cost for these improvements is $74,492.55, including a 10% contingency. Each parties' 50% proportionate cost share will be about $37,246. Since some of the colored concrete work has been done in conjunction with the recent UDOT traffic signal project at the Parrish Lane Intersection, the City paid for the cost of this portion of the concrete work up-front; therefore, that amount shall be taken into consideration in the 50/50 cost share with Maverik.

6. **Construction and Contract Administration.** Maverik agrees to incorporate the Trailhead Improvements into its site construction plans and contracts ("Construction Drawings") for development of the Maverik Property and to administer the installation of the improvements in accordance with applicable City Ordinance and regulations. Upon completion of the Trailhead Improvements, the City agrees to pay Maverik for the City's 50% proportionate cost share of the Trailhead Improvements as provided in Section 3, less the cost of the concrete work installed in conjunction with the UDOT traffic signal project, within 30 days of invoice from Maverik[LR24].

7. **City Inspection of Trailhead Improvements.** The City's representative shall be involved in inspecting the construction work on the Trailhead Improvements and Maverik shall notify the City Engineer when work is ready for inspection. At a minimum, the City shall inspect the base under the concrete flatwork before the concrete is poured. Maverik shall also provide the City Engineer with sufficient evidence and documentation that the concrete meets the strength specifications. Prior to final invoicing and payment and before close out of the construction contract with the contractor, the City shall have the right to final inspection of the work and installation of the Trailhead Improvements. Maverik shall provide the City with notice of completion of the Trailhead Improvements with reasonable time to inspect the improvements. The City shall provide Maverik with a punch list for corrections as needed and Maverik shall see that the contractor makes the requested corrections. Maverik shall provide a one year warranty on workmanship for the Trailhead Improvements.

8. **Water and Service Lateral.** Maverik agrees to install a water service lateral from the Maverik store to the drinking fountain within the pavilion as part of the Trailhead Improvements, including materials and labor for such installation. The City agrees to provide and install equipment and materials needed to shutoff and drain the water supply to the drinking fountain. The shutoff shall be located near the drinking fountain within the easement provided to the City in accordance with Section 11. The City shall be responsible for turning off the water supply each winter and for turning it on each spring and for maintaining the shutoff equipment. Maverik shall be responsible for maintaining the water service lateral from the Maverik store to the shutoff equipment. Maverik will pay for the water used at the drinking fountain as it will

be coming through their meter. The installation and maintenance of the water service lateral and the provision of water service for the drinking fountain shall not be considered part of the cost share arrangement described herein, but shall be paid for by the parties as set forth in this Section 8.

9. **Electricity and Service Lateral.** Maverik agrees to install an electric service lateral and conduit to the pavilion as part of the Trailhead Improvements, to provide electricity to the pavilion for lighting, and to pay for such electricity as part of Maverik's electric meter and monthly electric service. The electric service lateral shall be owned and maintained by Maverik. The City will be responsible for any necessary maintenance of the lighting fixtures, including replacement of bulbs. Such installation of the electric service lateral and electrical service costs shall not be considered part of the cost share arrangement described herein, but shall be paid solely by Maverik.

10. **Landscaping.** Maverik agrees to install and maintain all landscaping for the Trailhead Improvements in accordance with the architectural renderings set forth in **Exhibit B,** and in accordance with the Landscaping Plans approved as part of Final Site Plan[LR25] Approval for the Maverik Property. All such landscaping shall be maintained by Maverik in accordance with applicable City Ordinances and regulations. Such landscaping installation and maintenance costs shall not be considered part of the cost share arrangement described herein, but shall be paid solely by Maverik.

11. **Easement**[LR26]. Maverik hereby grants to the City an easement for public access, use and maintenance of the Trailhead Improvements over, across and through the property more particularly set forth in **Exhibit C,** attached hereto and incorporated herein by reference.

12. **Trailhead Improvements on UDOT Property.** Some of the Trailhead Improvements are to be located on UDOT property, including portions of the flat concrete work and the seat bench. Maverik shall obtain all required permits and approvals from UDOT for the installation of such improvements on UDOT property prior to installation or commencement of construction of the Trailhead Improvements. The City will assist Maverik in obtaining such permits from UDOT to the extent necessary. The City shall be responsible for obtaining an easement from UDOT for public access, use and maintenance of any portion of the Trailhead Improvements on UDOT property.

13. **Ownership and Maintenance.** Upon completion of the Trailhead Improvements and acceptance of the same by the City, the Trailhead Improvements shall be owned by the City. Except as otherwise provided herein, the City will maintain the Trailhead Improvements.

14. **Snow Removal Obligations.** Maverik shall be responsible for clearing snow from the Trailhead site and from the sidewalk that runs along 1250 West. The City shall be responsible for clearing the snow on the trail/pathway along Parrish Lane.

15. **Compliance with Approvals**. All development and use of the Maverik Property shall be subject to and comply with the terms and conditions of the Final Site Plan Approval and any amendments thereto as approved by the City. The terms and conditions of this Agreement are in addition to the terms and conditions of Final Site Plan Approval and applicable provisions of the Centerville Zoning Code, Centerville Municipal Code, or other rules and regulations. Maverik agrees and acknowledges that it enters this Agreement voluntarily and not as a condition of or inducement for any approvals by the City.

16. **Exhibits**. All exhibits attached to this Agreement are incorporated into this Agreement by reference as if fully set forth herein.

17. **Construction Drawings**. Maverik shall submit final project plans, profiles, design, specifications and construction drawings ("Construction Drawings") for the Trailhead Improvements for review and approval by the City Engineer. Construction Drawings for the Trailhead Improvements must be approved by the City Engineer prior to commencement of any work.

18. **Pre-Construction Meeting**. Prior to any commencement of construction of the Trailhead Improvements Maverik shall attend a Pre-Construction Meeting with City staff to coordinate work and any required inspections.

19. **Lien Waiver and Release**. Maverik shall provide the City with lien waiver and release of all liens and encumbrances for the Property subject to the Easement provided herein and any other potential mechanics liens or encumbrances, including, but not limited to any lien or right to a lien for services, labor, or materials furnished.

20. **Warranty**. Maverik shall warrant all workmanship for completed and accepted Infrastructure and Utilities for a period of one (1) year, which warranty period shall not commence until the Trailhead Improvements have been completed and accepted by the City.

21. **Compliance with City Ordinances.** The Property and all portions thereof shall be developed in accordance with the City Ordinances, Rezone Approval, Final Plat Approval, Construction Drawings, Final Site Plan Approval and this Agreement. All applicable City, State and Federal construction standards and specifications shall be met.

22. **Indemnification.** Upon final acceptance of the Trailhead Improvements by the City, the City agrees to indemnify and hold Maverik and its officers, employees, agents and representatives harmless from and against all liability, loss, damage, costs, or expenses, including attorney fees and court costs arising from or as a result of the death of any person or any accident, injury, loss or damage whatsoever caused to any person or to the property of any person which shall occur within the Trailhead Easement; provided, the City shall not be responsible for (and such indemnity shall not apply to) any negligent acts or omissions of Maverik or its agents, servants, employees or contractors with respect to the Trailhead Improvements and Easement. During

construction of the Trailhead Improvements and prior to final acceptance of the Trailhead Improvements by the City, Maverik agrees to indemnify and hold the City and its officers, employees, agents and representatives harmless from and against all liability, loss, damage, costs, or expenses, including attorney fees and court costs arising from or as a result of the death of any person or any accident, injury, loss or damage whatsoever caused to any person or to the property of any person which shall occur in connection with the construction of the Trailhead Improvements or within the Trailhead Easement; provided, Maverik shall not be responsible for (and such indemnity shall not apply to) any negligent acts or omissions of the City or its agents, servants, employees or contractors with respect to the Trailhead Improvements and Easement.

23. **Insurance.** During the period from commencement of the work on the Trailhead Improvements and ending on the date when the Trailhead Improvements have been accepted by the City, Maverik, its contractors, agents and representatives, shall furnish, or cause to be furnished, to the City, satisfactory Certificates of Insurance from reputable insurance companies evidencing death, bodily injury and property damage insurance policies in the amount of at least $2,000,000 single limit naming the City as an additional insured. Maverik shall require all contractors and other employees performing any work on the Trailhead Improvements to maintain adequate workers compensation insurance and public liability insurance.

24. **Default.** In the event any party fails to perform its obligations hereunder or to comply with the terms of this Agreement, the non-defaulting party may have the following enforcement remedies. Prior to invoking the remedies provided herein, the non-defaulting party shall provide the defaulting party written notice of default and a ten (10) day cure period. All notices of default shall be provided in accordance with the Notice provisions set forth in Section 27. In the event the defaulting party does not cure the default within the required ten (10) day cure period or enter into a written agreement for curing the default within a reasonable time, acceptable to the non-defaulting party in its reasonable discretion, the non-defaulting party may, at its election, have the following remedy or remedies:

a. All rights and remedies available at law and in equity, including, but not limited to, injunctive relief and specific performance.

b. The right to withhold all further approvals, licenses, permits or other rights associated with the particular lot, parcel or building to which the default is applicable until such default has been cured.

c. The rights and remedies set forth herein above shall be cumulative.

25. **Assignment.** Maverik shall not assign its obligations under this Agreement or any rights or interests herein without giving prior written notice to the City. Any future assignee shall consent in writing to be bound by the terms of this Agreement as a condition precedent to the assignment. No party shall transfer, assign, sell, lease, encumber, or otherwise convey its rights and obligations under this

Agreement separate from that party's interest in the Property. Unless otherwise provided, in the event of a sale or transfer of the Property, or any portion thereof, the buyer or transferee ("Subsequent Developer") shall be liable for the performance of each of the obligations contained in this Agreement as it relates to that portion of the Property it is buying, and acceptance of a deed to any portion of the Property shall constitute an agreement to assume and to be bound by the provisions of this Agreement as it relates to the Property covered by the deed. Each buyer or transferee shall sign an assignment and assumption agreement in a form reasonably acceptable to the City agreeing to be bound by the terms and conditions of this Agreement as provided herein. Any reference to Maverik herein shall be construed to refer to any Subsequent Developer with respect to the portion of the Property owned by such Subsequent Developer.

26. **Ownership and Recording.** Maverik hereby warrants and represents that it is the legal owners of record of the Maverik Property as described herein, it has the right to develop the Property, and it has full authority to enter into the terms of this Agreement encumbering the Property. Maverik hereby agrees and acknowledges that this Agreement shall be recorded against the Property. Prior to recording this Agreement, Maverik shall provide the City with a current and accurate title report regarding the Property. Maverik shall be required to cure or subordinate any unacceptable encumbrances on the Property, as determined by the City, prior to recording of this Agreement. All persons or entities with an ownership interest in the Property as shown on the title report shall sign and be a party to this Agreement.

27. **Notice.** All notices required or desired to be given hereunder shall be in writing and shall be deemed to have been provided on the date of personal service upon the party for whom intended or upon receipt if mailed, by certified mail, return receipt requested, postage prepaid, and addressed to the parties at the following addresses:

To Centerville City: Centerville City
Attn: City Manager
250 North Main Street
Centerville, Utah 84014

To Maverik[LR27]:

Any party may change its address for notice under this Agreement by giving written notice to the other party in accordance with the provisions of this paragraph.

28. **Attorney Fees.** Each party agrees that should it default in any of the covenants or agreements contained herein, the defaulting party shall pay all costs and expenses, including reasonable attorney fees which may arise or accrue from enforcing this Agreement, or in pursuing any remedy provided hereunder or by the statutes or other laws of the State of Utah.

29. **Entire Agreement.** This Agreement, together with the Exhibits attached hereto, documents referenced herein, and all regulatory approvals given by the City for the Property, contain the entire agreement of the parties with respect to the subject matter hereof and supersede any prior promises, representations, warranties, inducements or understandings between the parties which are not contained in such agreements, regulatory approvals and related conditions.

30. **Non-Liability of City Officials, Employees and Others.** No officer, representative, agent or employee of the City shall be personally liable to Maverik or any successor in interest or assignee of Maverik in the event of any default or breach by the City, or for any amount which may become due Maverik, or their successors or assigns, or for any obligation(s) arising under the terms of this Agreement.

31. **No Third Party Rights.** Unless otherwise specifically provided herein, the obligations of Maverik and the City set forth in this Agreement shall not create any rights in or obligations to any other persons or third parties.

32. **Binding Effect.** This Agreement shall be binding upon the parties hereto and their respective officers, agents, employees, successors and assigns, as permitted herein. The covenants contained herein shall be deemed to run with the Property and a copy of this Agreement shall be recorded in the office of the Davis County Recorder, State of Utah. The person signing for and on behalf of Maverik warrants and represents that he/she is duly authorized and empowered to enter into this Agreement for and on behalf of Maverik, and that by his/her signature, do bind Maverik to the terms of this Agreement.

33. **Governing Law and Jurisdiction.** The provisions of this Agreement shall be governed by and interpreted in accordance with the laws of the State of Utah. The parties to this Agreement agree that any judicial action associated with the Agreement shall be taken in the Utah state or federal court of competent jurisdiction.

34. **No Waiver.** Any party's failure to enforce any provision of the Agreement shall not constitute a waiver of the right to enforce such provision. The provisions may be waived only in writing by the party intended to be benefited by the provisions, and a waiver by a party of a breach hereunder by the other party shall not be construed as a waiver of any succeeding breach of the same or other provisions.

35. **Severability.** If any portion of this Agreement is held to be unenforceable by court of competent jurisdiction, any enforceable portion thereof and the remaining provisions shall continue in full force and effect.

36. **Time of Essence.** Time is expressly made of the essence with respect to the performance of each and every obligation hereunder.

37. **No Relationship.** Nothing in this Agreement shall be construed to create any partnership, joint venture or fiduciary relationship between the parties.

38. **Amendment.** This Agreement may be amended only in writing signed by the parties hereto.

39. **Force Majeure.** Neither party hereto shall be liable for any delay or failure in the keeping or performance of its obligations under this Agreement during the time and to the extent that any such failure is due to acts of God, acts of the United States Government or the State of Utah, fires, floods, or other casualties or causes beyond the reasonable control and without the fault or negligence of the party obligated to perform hereunder; provided the party seeking relief under the provisions of this Section: (1) notifies the other party in writing of a force majeure event within fifteen (15) days following the affected party's knowledge of the occurrence of the claimed force majeure event, and (2) promptly resumes the keeping and performance of the affected obligations after such cause has come to an end. Each party shall make every reasonable effort to keep delay in performance as a result of such a cause to a minimum.

IN WITNESS WHEREOF, the parties hereto have executed this Agreement by and through their respective, duly authorized representatives as of the day and year first above written.

"CITY"

CENTERVILLE CITY

ATTEST:

_____
Marsha L. Morrow, City Recorder

By:_____
Mayor Paul A. Cutler

"MAVERIK"

Maverik, Inc.

By:_____

Its:_____

CITY ACKNOWLEDGMENT

STATE OF UTAH)
:ss.
COUNTY OF DAVIS)

On the _____ day of _____, 2016, personally appeared before me Paul A. Cutler, who being duly sworn, did say that he is the Mayor of **CENTERVILLE CITY**, a municipal corporation of the State of Utah, and that the foregoing instrument was signed in behalf of the City by authority of its governing body and said Paul A. Cutler acknowledged to me that the City executed the same.

_____
Notary Public

My Commission Expires:

_____

Residing at:

_____

ACKNOWLEDGMENT

STATE OF UTAH)
:ss.
COUNTY OF _____)

On the _____ day of _____, 2016, personally appeared before me_____, who being duly sworn, did say that (s)he is the _____ of **MAVERIK, INC.**, a _____ corporation, and that the foregoing instrument was signed on behalf of the corporation, by authority of its board of directors, and that said corporation freely and voluntarily executed the same.

_____
Notary Public

My Commission Expires:

_____

Residing at:

_____

EXHIBITS[LR28]

Exhibit A	Maverik Property Description
Exhibit B	Design Development Level Drawings of Trailhead Improvements
Exhibit C	Easement Description

EXHIBIT A

Maverik Property Description

EXHIBIT B

Design Development Level Drawings for Trailhead Improvements

EXHIBIT C

Easement Description

MGB+A
The Grassli Group

1250 West Parrish Lane Trailhead Improvements

4/1/2015

Cost Estimate					
	Item	Quantity	Unit	Cost/Unit	Cost
	Colored Concrete	1,494	SF	$10.00	$14,942.00
	Sea Walls	7	CY	$600.00	$4,068.00
	Skate Stopper on Concrete Wall	10	EA	$26.00	$260.00
	Pavilion	1	EA	$27,370.00	$27,370.00
	Pavilion lighting - [illegible]	4	EA	$500.00	$2,000.00
	Drinking Fountain	1	EA	$4,340.00	$4,340.00
	Kiosk	1	EA	$6,185.00	$6,185.00
	Bench	1	EA	$1,900.00	$1,900.00
	Bike Racks	1	EA	$530.00	$1,677.00
	Bike Fix Station	1	EA	$785.00	$785.00
	Outdoor Bike Pump	1	EA	$737.00	$737.00
	Installation 20%	1	LS	$8,518.56	$8,518.56
	Contingency 10%	1	LS	$7,297.96	$7,297.96
	note: costs include shipping				
Total On-Site Improvements					**$80,277.54**

143 west 200 south • salt lake city, utah 84101 • p 801.364.9696 • f 801.364.9719 • www.grassligroup.com

SECTION 03 30 04

CONCRETE

PART 1 GENERAL

1.1 SECTION INCLUDES

A. Material requirements.

1.2 REFERENCES

A. ACI 211.1: Standard Practice for Selecting Proportions for Normal, Heavyweight, and Mass Concrete.

B. ACI 211.2: Standard Practice for Selecting Proportions for Structural Lightweight Concrete.

C. ACI 211.3: Standard Practice for Selecting Proportions for No-Slump Concrete.

D. ACI 214: Recommended Practice for Evaluation of Strength Test Results of Concrete.

E. ACI 301: Specifications for Structural Concrete for Buildings.

F. ACI 305: Hot Weather Concreting.

G. ACI 306: Cold Weather Concreting.

H. ACI 318: Building Code Requirements for Reinforced Concrete.

I. ASTM C 33: Standard Specification for Concrete Aggregates.

J. ASTM C 39: Standard Test Method for Compressive Strength of Cylindrical Concrete Specimens.

K. ASTM C 88: Standard Test Method for Soundness of Aggregates by Use of Sodium Sulfate or Magnesium Sulfate.

L. ASTM C 94: Standard Specification for Ready-Mixed Concrete.

M. ASTM C 117: Standard Test Method for Material Finer than 75μ (No. 200) Sieve in Mineral Aggregates by Washing.

N. ASTM C 138: Standard Test Method for Unit Weight, Yield, and Air Content (Gravimetric) of Concrete.

O ASTM C 143: Standard Test Method for Slump of Hydraulic-Cement Concrete.

P. ASTM C 150: Standard Specification for Portland Cement.

Q. ASTM C 172: Standard Method of Sampling Freshly Mixed Concrete

R. ASTM C 227: Standard Test Method for Potential Reactivity of Cement-Aggregate Combinations (Mortar Bar Method).

S. ASTM C 231: Standard Test Method for Air Content of Freshly Mixed Concrete by the Pressure Method.

T. ASTM C 260: Standard Specification for Air-Entraining Admixtures for Concrete.

U. ASTM C 289: Standard Test Method for Potential Reactivity of Aggregates (Chemical Method).

V. ASTM C 295: Standard Practice for Petrographic Examination of Aggregates for Concrete.

W. ASTM C 441: Standard Test Method for Effectiveness of Mineral Admixtures or Ground Blast-Furnace Slag in Preventing Excessive Expansion of Concrete Due to The Alkali-Silica Reaction.

X. ASTM C 494: Standard Specification for Chemical Admixtures for Concrete.

Y. ASTM C 595: Standard Specification for Blended Hydraulic Cements.

Z. ASTM C 618: Standard Specification for Fly Ash and Raw or Calcined Natural Pozzolan for Use as a Mineral Admixture in Portland Cement Concrete.

AA. ASTM C 1064: Standard Test Method for Temperature of Freshly Mixed Portland Cement Concrete.

BB. ASTM C 1116: Standard Specification for Fiber-Reinforced Concrete and Shot Crete.

CC. ASTM C 1157: Standard Performance Specification for Blended Hydraulic Cement.

DD. ASTM C 1240: Standard Specification for Use of Silica Fume as a Mineral Admixture in Hydraulic Cement Concrete, Mortar, and Grout.

EE. ASTM C 1260: Standard Test Method for Potential Alkali Reactivity of Aggregates (Mortar-Bar Method).

FF. ASTM C 1293: Standard Test Method for Concrete Aggregates by Determination of Length Change of Concrete Due to Alkali-Silica Reaction.

GG. ASTM C 1567: Standard Test Method for Determining the Potential Alkali-Silica Reactivity of Combinations of Cementitious Materials and Aggregate (Accelerated Mortar-Bar Method).

HH. ASTM C 1602: Standard Specification for Mixing Water Used in The Production of Hydraulic Cement Concrete.

I I. ASTM D 1077: Standard Practice for Laboratories Testing Concrete and Concrete Aggregates for Use in Construction and Criteria for Laboratory Evaluation.

J J. ASTM STP 15-C: Manual on Quality Control of Materials.

1.3 SUBMITTALS

A. **Quality Assurance**: Submit names, certification levels, and years of experience of testing agency's laboratory and field technicians that are assigned to the Work. Verify laboratory complies with ASTM and ACI standards.

B. **Mix Design**: Submit.

1. Date of mix design. If older than 365 days, recertify mix design.
2. Cement source, type and chemical composition.
3. Aggregate soundness and potential reactivity.

4. Average Strength (fcr), per quality control chart.
5. Allowable range of slump and air content.
6. Water cement ratio.
7. Proportions of materials in the mix.
8. Unit weight.
9. Analysis of water if water is not potable.
10. Mortar bar test results if a pozzolan is included in the mix.
11. Technical data sheets for additives to be used at the plant and at the job site. Certify additives are compatible with each other.

C. **Pre-approved mix design**, submit name and address of Supplier.

D. **Before changing mix design**, submit a new design and give ENGINEER 10 days to evaluate the changes.

E. **Source Quality Control Inspections and Testing Report**: If requested, submit report describing CONTRACTOR's and Supplier's quality control activities and test results.

1.4 QUALITY ASSURANCE

A. Use a laboratory that follows and complies with ASTM D 1077.

B. Reject concrete that does not meet requirements of this section.

C. Do not change material sources, type of cement, air-entraining agent, water reducing agent, other admixtures except as allowed by mix design.

D. Store bagged and bulk cement in weatherproof enclosures. Exclude moisture and contaminants.

E. Prevent segregation and contamination of aggregate stockpiles.

F. Avoid contamination, evaporation, or damage to admixtures. Protect liquid admixtures from freezing.

G. Use of admixtures will not relax hot or cold weather placement requirements.

1.5 ACCEPTANCE

A. Materials:

1. At the Source: Verify aggregate gradation. Determine percent of combined aggregate passing No. 200 sieve.
2. At the Site: Verify mix identification, batch time, slump, air content, and temperature.
3. At the Laboratory: Verify strength in 28 days.

B. Placement:

1. Concrete in general, Section 03 30 10.
2. Pavement, Section 32 13 13 and 32 01 26.
3. Exterior flatwork, Section 32 16 13 or 32 16 14.

C. Defective Material:

1. Price adjustment, Section 01 29 00 and Section 03 30 10.
2. Dispute resolution, Section 01 35 10.

PART 2 PRODUCTS

2.1 CEMENT

A. General:
   1. Do not use air entraining cement except for hand mixed applications.
   2. Do not use cement that contains lumps or is partially set.
   3. Do not mix cement originating from different sources.

B. Standard Set Cement:
   1. Type II cement per tables 1 and 3 in ASTM C 150, or Type V when necessary, or
   2. Low-alkali cement per table 2 in ASTM C 150.

C. Rapid Set Cement: As above and as follows.
   1. Initial set time: 15 minutes minimum.
   2. Color: Acceptable to the ENGINEER.

D. Blended Hydraulic Cement: The following are the cement equivalencies when substituting blended cement for a portland cement.

Table 1 - Cement Equivalencies

ASTM C 150 (Low Alkali)	ASTM C 595	ASTM C 1157
Type I	IP	GU
Type II	IP (MS)	MS
Type III	–	HE
Type IV	–	–
Type V	–	HS

2.2 WATER

A. Clean, non-staining, non-detrimental per ASTM C 1602.
B. Screen out extraneous material.
C. Do not use alkali soil water.

2.3 AGGREGATES

A. Material: Clean, hard, durable, angular, and sound consisting of gravel, crushed gravel, crushed stone, crushed concrete, slag, sand or combination.

B. Source: Use the following requirements to determine suitability of aggregate source and not for project control.
   1. Deleterious Substances and Physical Properties:

a. Coarse Aggregate: Class designation 4S in table 3 in ASTM C 33.
b. Fine Aggregate: Table 1 in ASTM C 33. Organic impurities producing a dark color concrete may cause rejection.

2. Reactivity:
   a. Average prism length change in 12 months in an unmodified ASTM C 1293 test is less than 0.04 percent, or
   b. Average mortar bar length change at 16 days in an unmodified ASTM C 1260 test is less than 0.10 percent, or
   c. Historical data acceptable to ENGINEER, or
   d. Petrographic limits per ASTM C 295. 1) Optically strained, micro fractured, or microcrystalline quartz: 5.0% maximum. 2) Chert or chalcedony: 3.0% maximum. 3) Tridymite or cristobalite: 1.0% maximum. 4) Opal: 0.5% maximum. 50 Natural volcanic glass volcanic rocks: 3.0% maximum

2.4 ADMIXTURES

A. Calcium Chloride: Not allowed.

B. Air Entrainment: ASTM C 260. For extrusion enhancement use nonvinsal resin.

C. Set Enhancement and Water Reducing Agents: ASTM C 494.

1. Type A: Water reducing.
2. Type B: Set retarding.
3. Type C: Set accelerating.
4. Type D: Water reducing and set retarding.
5. Type E: Water reducing and set accelerating.
6. Type F: High range water reducing (super plasticizer). *
7. Type G: High range water reducing and set retarding. *

   * Keep the relative durability factor of water reducing additives not less than 90 and the chlorides content (as Cl^-) not exceeding 1 percent by weight of the admixtures.

D. Pozzolan:

1. Natural or fly ash per ASTM C 618.
2. Silica fume per ASTM C 1240

E. Special Admixtures: Allowed if mix design submittal is accepted.

1. Lithium nitrate based solution for control of reactive aggregates.
2. Calcium nitrite based solution for corrosion protection of reinforced structures subject to chloride-induced corrosion.
3. Shrinkage reducer for controlling drying shrinkage in concrete.
4. Viscosity modifier for enhancement of self consolidating concrete or for workability.

2.5 MIX DESIGN

A. Selection of Cement: ASTM C 150 or C 1157.

1. For sulfate resistance, use Type V portland cement, or Type II with Class F fly ash. Class F fly ash may be used as an addition to Type V portland cement.
2. Do not use fly ash with Type IP(MS) or Type III portland cement.

B. Selection of Aggregates.

1. Maximum Particle Size:

a. 1/5 of narrowest dimension between forms.
b. 1/3 of depth of slab.
c. 3/4 of minimum clear spacing between reinforcing bars.

2. Gradation: ASTM C 33.

a. Coarse Aggregate: Choose from the following grades. Gradations are based upon percent of material passing sieve by weight.

Sieve Size	Grade			
	357 (2")	467 (1.5")	57 (1")	67 (3/4")
2-1/2"	100	–	–	–
2 inch	95 - 100	100	–	–
1-1/2"	–	95 - 100	100	–
1"	35 - 20	–	95 - 100	100
3/4"	–	35 - 70	–	90 - 100
1/2"	10 - 30	–	25 - 60	–
3/8"	–	10 - 30	–	20 - 55
No. 4	0 - 5	0 - 5	0 - 10	0 - 10

b. Fine Aggregate:

Sieve Size	Percent Passing (by Weight)
3/8"	100
No. 4	95 to 100
No. 16	45 to 80
No. 50	10 to 30
No. 100	2 to 10

c. Silts and Clays: The amount of material smaller than the No. 200 sieve in any combined gradation sample is limited to the following percentages by weight of the combined sample.

1. 1.75 percent maximum for concrete subject to abrasion.
2. 3.0 percent maximum for all other concrete. 194

C. Selection of Pozzolan:

1. General: If a blended aggregate passes an unmodified ASTM C 1293 test, use of a pozzolan is CONTRACTOR's choice, otherwise select a pozzolan (or blended

cement, or both) and determine the effective dosage to meet one of the following tests.

a. ASTM C 1567. The expansion of a cement-pozzolan-aggregate job-mix mortar bar is less than or equal to 0.10 percent at 16 days. Do not use this test if a lithium admixture is used in the job-mix.

b. ASTM C 441. The expansion of a test mixture at 56 days is less than or equal to a control mixture prepared with cement with equivalent alkalis between 0.5 and 0.6 percent.

2. Fly Ash (Class F): Allowed as a cement replacement under the following conditions.

a Before replacement is made, use the minimum cement content in the design formula to establish the water/cement ratio.

b. Replace up to 20 percent of the cement by weight on a minimum basis of 1 part fly ash to 1 part cement.

c. Submit to ENGINEER a quality history of the fly ash identifying a minimum of 20 of the most current ASTM C 618 analysis.

3. Natural Pozzolan (Class N): Allowed as a cement replacement if the 14 day expansion test (ASTM C 1567) with job aggregates, job cement and natural pozzolan does not exceed the 14 day expansion test of job aggregates, job cement and Class F fly ash.

4. Silica Fume: Allowed as a cement replacement if replacement of hydraulic cement on a 1 part silica fume to 1 part cement does not exceed 10 percent, and water/cement ratio is established before cement is replaced with silica fume.

D. Selection of Fiber Reinforcement: The basis for determining material proportions of fiber- reinforced concrete is the Supplier's responsibility per ASTM C 1116 subject to mix property requirements of this Section. Unless specified otherwise provide synthetic fibers.

E. Selection of Mix Properties: Select and proportion mix to produce appropriate strength, durability and workability. Use ACI 211.1, 211.2, or 211.3, and meet the following properties and limitations.

Table 3 - Mix Properties and Limitations					
Properties		**Test Method**	**Class**		
			2000	**3000**	**4000**
Compressive Strength (fc') at 28 days, psi, minimum		ASTM C 39	2000	3000	4000
Compressive Strength at 7 days, psi, (for reference only)		ASTM C 39	1340	2010	2680
Average Strength, psi (fcr)		ACI 214	(a)	(a)	(a)
Cement content, bags, minimum (b)		–	4.5	5.5	6.5
Water-cement ratio (by weight), maximum (d)		ACI 318	(c)	(c)	0.44
Entrained air, percent (based upon aggregate size) (e)	2" 1-1/2" 1" 3/4"	ASTM C 231	3.0 to 6.0 " " "	4.5 to 7.5 " " "	4.0 to 7.0 4.5 to 7.5 5.0 to 7.5 5.0 to 7.5
Slump		ASTM C 143	(c)	(c)	©)

NOTES:
(a) The amount by which average strength (fcr) exceeds compressive strength (fc') is based upon statistical assurance that no more than 1 test in 100 tests will fall below compressive strength (fc').
(b) Unless allowed otherwise by Engineer.
(c) Specific to exposure conditions and finishing need.
(d) Before pozzolan substitution.
(e) Comply with ACI 211.1 if air content is changed.
(f) 1 bag of cement = 94 pounds.

1. Cold Weather: ACI 306. Unless allowed otherwise by ENGINEER, increase cement content in the mix design by 1 bag between **October 1 and March 1,** i.e. 5.5 becomes 6.5, or 6.5 becomes 7.5, etc.
2. Hot Weather: ACI 305. Reduce temperature of mix ingredients or use an admixture appropriate to job conditions when air temperature is over 75 deg. F.
3. Concrete Deposited Under Water: Increase cement content 1 bag per cubic yard greater than the design required for concrete placed above water or use viscosity modifying admixture.

2.6 SOURCE QUALITY CONTROL

A. Once selected, do not change source quality control sampling point.

B. Aggregate:

1. Soundness, ASTM C 88.
2. Alkali-silica Reactivity: ASTM C 289, C 1567, C 227 and C 1293.
3. Petrographically examine fine and coarse aggregate sources once every 3 years per ASTM C 295.

C. Concrete Mix: Obtain samples per ASTM C 172 and run the following tests.

1. Compressive strength, ASTM C 39.
2. Unit weight, ASTM C 138.
3. Slump, ASTM C 143.
4. Air, ASTM C 231.
5. Temperature, ASTM C 1064.

D. Concrete Quality Charts: Comply with ACI 214 and ACI 301. Plot new results and identify trends on quality control charts that comply in form to ASTM STP 15-C. Show the Specified Strength (fc'), the required Average Strength (fcr), and the compressive strength versus date of Sample.

E. Equipment: Certify through the services of a professional engineer that trucks and plant equipment comply with the requirements of the National Ready Mixed Concrete Association. Do so at least every 2 years.

1. Transit Trucks: Equip transit trucks with plates indicating total volume, agitating volume and mix volume.
2. Weights and Measures: Comply with regulatory requirements of State of Utah.

PART 3 EXECUTION

3.1 INSTALLATION

A. Placement, Section 03 30 10.

B. Pavement restoration, Section 33 05 25.

C. Driveways, sidewalks, curb, gutter, Section 32 13 16.

D. Roadway pavement, Section 32 13 13.

3.2 FIELD QUALITY CONTROL

A. Truck Mixed Concrete (Dry Batch): ASTM C 94.

1. Truck Mixer: Fill drum no more than 63 percent of the gross drum volume and no less than 2 cubic yards. Use drum manufacturer's recommended mixing speed (between 12 18 rpm).
2. Truck Agitator: Do not fill drum greater than 80 percent of the gross drum volume. Use drum manufacturer's recommended agitating speed (between 2 – 6 rpm).

B. Mixing Plant: ASTM C 94.

1. Use option C and requirements in this section for preparing ready-mixed concrete.

2. Use scales certified by the State of Utah. Do not use volume measurement except for water and liquid admixtures.
3. Mixing time must exceed 80 seconds after adding air entrainment admixture.

C. Hand Mixing:

1. Do not hand mix batches larger than 0.5 cubic yard.
2. Hand mix only on a watertight platform.
3. Ensure all stones are thoroughly covered with mortar and mixture is of uniform color and consistency prior to adding water.

END OF SECTION

SECTION 03 30 05

CONCRETE TESTING

PART 1 GENERAL

1.1 SECTION INCLUDES

A. Concrete sampling and testing requirements.

1.2 REFERENCES

A. ACI 318: Building Code Requirements for Reinforced Concrete.

B. ASTM C 31: Standard Practice for Making and Curing Concrete Test Specimens in the Field.

C. ASTM C 39: Standard Test Method for Compressive Strength of Cylindrical Concrete Specimens.

D. ASTM C 42: Standard Method of Obtaining and Testing Drilled Cores and Sawed Beams of Concrete.

E. ASTM C 78: Standard Test Method for Flexural Strength of Concrete (Using Simple Beam with Third-Point Loading).

F. ASTM C 136: Standard Method for Sieve Analysis of Fine and Coarse Aggregates.

G. ASTM C 138: Standard Test Method for Unit Weight, Yield, and Air Content (Gravimetric) of Concrete.

H. ASTM C 143: Standard Test Method for Slump of Portland Cement Concrete.

I. ASTM C 172: Standard Method of Sampling Freshly Mixed Concrete.

J. ASTM C 173: Standard Test Method for Air Content of Freshly Mixed Concrete by Volumetric Method.

K. ASTM C 231: Standard Test Method for Air Content of Freshly Mixed Concrete by the Pressure Method.

L. ASTM C 567: Standard Test Method for Unit Weight of Structural Lightweight Concrete.

M. ASTM C 1064: Standard Test Method for Temperature of Freshly Mixed Portland Cement Concrete.

N. ASTM D 1077: Standard Practice for Laboratories Testing Concrete and Concrete Aggregates for Use in Construction and Criteria for Laboratory Evaluation.

1.3 SUBMITTALS

A. Concrete Supplier: If requested, submit reports and material certificates verifying concrete quality control.

B. Laboratory: Promptly submit test data results for 7 and 28 day breaks to Supplier, CONTRACTOR and ENGINEER.

1.4 **QUALITY ASSURANCE**

A. Provide an ASTM D 1077 compliant and ACI certified laboratory.

B. Provide level I ACI certified field sampling technicians.

1.5 **SITE CONDITIONS**

A. Assist ENGINEER: Furnish labor to assist ENGINEER in obtaining and handling acceptance samples at site or sources.

B. Store and Cure Test Specimens: Safely store and cure concrete test specimens and acceptance test specimens for first 24 hours.

1. Follow ASTM C 31 in making and curing cylinders or beams at site. Do not move the cylinders or beams for the initial 16 hour cure period. Provide initial cure temperature as follows.

a. 60 to 80 deg. F. for Class 4,000 or less.

b. 68 to 78 deg. F. for Class 5,000 or greater.

2. Equip storage device with an automatic 24 hour temperature recorder with an accuracy of plus or minus 2 deg. F.

3. Use water containing hydrated lime if water is to be in contact with cylinders or beams.

4. Ensure the device(s) can accommodate the required number of test cylinders or beams. Lack of capacity will cause the placement of concrete to cease.

5. Have the storage devices available at the point of placement at least 24 hours before placement.

6. A 24 hour test run may be required.

1.6 **ACCEPTANCE**

A. At the Site:

1. Sampling: ASTM C 172. Reject non-complying batches until 2 consecutive batches are compliant then proceed in random batch testing for acceptance.

2. Temperature, ASTM C 1064.

3. Air content, ASTM C 231 or ASTM C 173 if lightweight aggregate is used.

4. Slump, ASTM C 143. 200

B. At the Laboratory:

1. Compressive strength, ASTM C 31.

2. Flexure strength, ASTM C 78.

PART 2 PRODUCTS Not Used

PART 3 EXECUTION

3.1 **PRECAST PRODUCTS**

A. Obtain composite Samples from different portions of the batch.

B. Make and cure concrete test specimens for acceptance, ASTM C 31.

C. Cure all precast products with water vapor or water.

D. Do not damage precast products by stripping forms or handling before the concrete reaches its specified strength.

3.2 **CAST-IN-PLACE PRODUCTS**

A. Obtaining Samples:

1. Batch samples, ASTM C 172.
2. Core samples, ASTM C 42.

B. Identify location of tests on test reports.

C. Compressive strength , ASTM C 39.

1. Mold 4 test specimens, ASTM C 31.
2. For each strength test perform slump, air, unit weight, and temperature test.
3. Break 1 cylinder at 7 days and 3 cylinders at 28 days. The average strength of 3 cylinder breaks shall be considered the test result.
4. If any one cylinder in a 28 day test shows definite evidence of improper sampling, molding, handling, curing, or testing, discard the cylinder. The average strength of the remaining cylinders shall be considered the test result.

D. Tensile (flexural) strength, ASTM C 78.

1. Mold 4 test specimens, ASTM C 31.
2. For strength test perform slump, air, unit weight, and temperature test.
3. Break 1 beam at 7 days and 3 beams at 28 days. The average strength of the 3 beam breaks shall be considered the test result.
4. If any one beam in a 28 day test shows definite evidence of improper sampling, molding, handling, curing, or testing, discard the beam. The average strength of the remaining beams shall be considered the test result.

E. Aggregate, ASTM C 136 for fine and coarse aggregate.

F. Slump test, ASTM C 143.

G. Air Test:

1. Normal weight concrete, ASTM C 231.
2. Light weight concrete, ASTM C 173.

H. Unit Weight:

1. Normal weight concrete, ASTM C 138.
2. Light weight concrete, ASTM C 567.

I. When requested, test in-place concrete by impact hammer, sonoscope, or other non-destructive device:

1. To determine relative strengths in various locations in Work.
2. To aid in evaluating concrete strength.
3. To select areas to be cored.
4. To verify quality control in the absence of control testing.

3.3 RETESTING DEFECTIVE CONCRETE

A. If CONTRACTOR desires to do a retest, a request to ENGINEER for retesting must be made within 35 days from time of concrete placement.
No coring or retesting shall be done after 40 days have elapsed from the time of placement.

1. Choose 3 random test locations and verify choice with ENGINEER. Obtain retest samples per ASTM C 42 and test compressive strength per ASTM C 39 or flexure strength per ASTM C 78.
2. Establish a chain of custody for all test samples.
3. If concrete placed in the Work will be dry under service condition, air dry cores for 7 days before tests. Unless otherwise specified, use air temperature 60 to 80 deg. F. and relative humidity less than 60 percent.
4. If concrete placed in the Work will be more than superficially wet under service conditions, test cores after moisture conditioning (liquid or vapor water cure).
5. If more than 1 core shows evidence of having been damaged before testing provide replacement cores, otherwise evaluation will be done on 2 or more core samples.
6. Evaluate cores in accordance with ACI 318 requirements.
7. If core tests are inconclusive, or impractical to obtain, or if structural analysis does not confirm the safety of the Work, load test may be used and evaluated in accordance with ACI 318 requirements.

B. Coat sides of core hole with concrete epoxy resin adhesive. Fill core holes with non-shrink concrete mortar. Match color and texture of surrounding concrete.

C. Within 40 days from time of placement publish the chain of custody record and the results of retesting.

END OF SECTION

SECTION 03 30 10

CONCRETE PLACEMENT

PART 1 GENERAL

1.1 SECTION INCLUDES

A. Concrete placement for slabs on grade, slabs on fill, structural building frame, and other concrete components.

1.2 REFERENCES

A. ACI 301: Specifications for Structural Concrete for Buildings.

B. ACI 305: Hot Weather Concreting.

C. ACI 306: Cold Weather Concreting.

D. ACI 309: Standard Practice for Consolidation of Concrete.

E. ASTM C 881: Standard Specification for Epoxy-Resin-Base Bonding Systems for Concrete.

F. ASTM C 1059: Standard Specification for Latex Agents for Bonding Fresh to Hardened Concrete.

1.3 SUBMITTALS

A. Batch Delivery Ticket: For each batch delivered to site, identify.

1. Date and Project description.
2. Producer and plant.
3. Name of contractor.
4. Serial number of ticket.
5. Mix identification.
6. Truck number and time dispatched.
7. Volume of concrete.
8. Type and amount of cement.
9. Total water and water/cement ratio.
10. Water added for receiver of concrete and receiver's initials.
11. Admixture types.
12. Separate weights of fine and coarse aggregate.
13. Statement of whether batch is pre-mixed at plant or mixed in transit.

B. Record of Placed Concrete: Identify record date, location of pour, quantity, air temperature, and CONTRACTOR's quality control test samples taken.

C. Bonding Compound: Identify product name, type, and chemical analysis.

1.4 QUALITY ASSURANCE

A. Provide ACI certified finishers.

B. Remove and replace any placed concrete suffering hot or cold weather damage.

C. For control testing follow Section 03 30 05 requirements.

1.5 **ACCEPTANCE** A General:

A.1. Price adjustment, Section 01 29 00. CONTRACTOR may request ENGINEER determine appropriate Modifications or payment adjustments to correct Defective Work.

2. Dispute resolution, Section 01 35 10 and Section 03 30 05.

B. Concrete work that fails to meet any of the following requirements will be considered defective. Replace any Defective Work at no additional cost to the OWNER.

1. Placement:
   a. Reinforcing steel size, quantity, strength, position, damage, or arrangement is not as specified or does not comply with code.
   b. Formwork differs from required dimensions or location in such a manner as to reduce concrete's strength or load carrying capacity or physical esthetics.
   c. Workmanship likely to result in deficient strength.
2. Finishing:
   a. Concrete exposed to view has defects that adversely affect appearance.
   b. Slab tolerances of Section 03 35 00 are not met.
3. Protection:
   a. Method of curing is not as specified.
   b. Inadequate protection of concrete during early stages of hardening and strength development from
      1) temperature extremes.
      2) rapid moisture loss.
   c. Mechanical injury, construction fires, accidents, or premature removal of formwork likely to result in deficient strength development.

PART 2 PRODUCTS

2.1 **MATERIALS**

A. Concrete, Section 03 30 04. Class as indicated.

1. For roadway cuts, Section 33 05 25.

B. Bonding compound, ASTM C 1059. Either polyvinyl acetate base or acrylic base latex.

1. Use type I in areas not subject to high humidity or immersion in water with minimum bond strength of 400 psi.
2. Use type II in areas subject to high humidity or immersion in water with minimum bond strength of 1250 psi.

C. Vapor retarder, 10 mil thick clear polyethylene sheet. Type

recommended for below grade application.

D. Forms, Section 03 11 00.

E. Reinforcement, Section 03 20 00.

F. Coverings and curing compound, Section 03 39 00.

G. Shinkage compensating grout, Section 03 61 00.

H. Epoxy adhesive, Section 03 61 00.

PART 3 EXECUTION

3.1 PREPARATION

A. Notify ENGINEER minimum 24 hours prior to commencement of concrete placement operations.

B. Do not allow construction loads to exceed structural capacity.

C. Clean previously placed concrete. Apply bonding compound per manufacturer's instructions.

D. At locations where new concrete is dowelled to existing work, drill, remove dust, insert and pack steel dowels with shrink compensating grout.

3.2 EXAMINATION

A. Verify items to be cast into concrete are accurately placed and held securely.

B. Verify slump, air content range, mix identifty, and batch time on delivery ticket matches mix design.

C. Verify slab steel mats are supported by steel chairs, precast concrete blocks, or other slab bolsters. Do not pour if absent.

3.3 DELIVERY

A. Slump and Air Content: Keep slump and air content within the allowable range.

B. Placement Time:

Air Time	Temperature After Initial Batching
Less than 90 deg. F.	1–1/2 hours
Greater than 90 deg. F.	1–hour (without retarder)
Greater than 90 deg. F.	1–1/2 hours (with retarder)

To increase time past 1-1/2 hours, a hydration stabilizer that is acceptable to Supplier may be used.

C. Tempering:

1. Water may be added if all following conditions are met.

   a. The mix design water/cement ratio is not exceeded.

b. The delivery ticket allows for addition of water based upon water/cement ratio.
c. The amount of water added is accurately measured to within 1 gallon of the design addition.
d. Water addition is followed by 3 minutes of mixing at mixing speed prior to discharge.
e. Supplier and CONTRACTOR mutually agree on who is authorized to add water.

2. **Do not add water after 1 cubic yard of concrete has discharged from the delivery vehicle.**

D. Super-plasticizer: Comply with manufacturer's requirements. If none, then as follows.

1. If added at site, add agent using injection equipment capable of rapidly and uniformly distributing the admixture to the concrete. Prior to discharge, mix for a minimum of 5 minutes at a drum rate not less than 12 rpm or more than 15 rpm.
2. If added at plant; do not deliver to site unless batch delivery ticket displays water/cement ratio prior to super-plasticizer addition.

3.4 CONCRETE PLACEMENT

A. Place concrete, ACI 301.

1. Hot Weather Placement: ACI 305. If the rate of evaporation approaches 0.2 lb./ft^2/hr. precautions against plastic shrinkage cracking are necessary. (i.e. dampening Subgrade and forms; placing concrete at the lowest possible temperature; erecting windbreaks and sunshades; fog sprays; use of evaporation retardants; or rescheduling time of placement).
2. Cold Weather Placement: ACI 306. Non-chloride accelerating admixture may be used in concrete work placed at ambient temperatures below 50 deg. F. Use of admixtures will not relax cold weather placement, curing, or protection requirements.

B. Concrete Temperature: Keep mixed concrete temperature at time of placement between 60 deg. F. and 90 deg. F.

C. Do not disturb reinforcement, inserts, embedded parts, and formed joints.

D. Do not break or interrupt successive pours such that cold joints occur.

E. Honeycomb or embedded debris in concrete is not acceptable.

3.5 JOINTS AND JOINT SEALING

A. Steel edging and jointing tools are acceptable. Preferred are magnesium, aluminum or wood tools

B. Pavement joint sealing, Section 32 13 73.

3.6 CONSOLIDATION

A. Keep spare vibrator available during concrete placement operations, ACI 309.

3.7 FINISHING

A. Section 03 35 00 and as follows.

3.8 **CURING**

A. Section 03 39 00. Use a membrane forming compound unless specified otherwise.

3.9 **PROTECTION AND REPAIR**

A. Protection: Section 01 66 00.

1. Immediately after placement, protect concrete from premature drying, excessively hot or cold temperatures, graffiti, and mechanical injury.
2. Maintain concrete with minimal moisture loss at relatively constant temperature for period necessary for hydration of cement and hardening of concrete.

B. Repair:

1. Modify or replace concrete not conforming to required levels, lines, details, and elevations.
2. Structural analysis and additional testing may be required at no additional cost to OWNER when the strength of a structure is considered potentially deficient.
3. To patch imperfections refer to Section 03 35 00 requirements.
4. Remove graffiti and mechanical injury.

END OF SECTION

SECTION 03 35 00

CONCRETE FINISHING

PART 1 GENERAL

1.1 SECTION INCLUDES

A. Finishing interior and exterior concrete surfaces.

1.2 REFERENCES

A. ACI 303: Guide to Cast-in-Place Architectural Concrete Practice.

1.3 SUBMITTALS

A. Name, type, chemical analysis and manufacturer's recommended rate of application for liquid chemical hardener.

1.4 PROJECT CONDITIONS

A. Protect adjacent materials and finishes from dust, dirt and other surface or physical damage during finishing operations. Provide protection as required and remove from site at completion of Work.

PART 2 PRODUCTS

2.1 MATERIALS

A. Masonry Mortar and Grout: Section 04 05 16.

B. Dry Shake: Blend of metallic or mineral aggregate with Portland cement concrete in proportions recommended by manufacture.

C. Proprietary Materials: If permitted or required, proprietary compounds may be used in lieu of or in addition to foregoing materials. Use such compounds per manufacturer's recommendations.

D. Liquid-Chemical Hardener: Colorless, aqueous solution containing a blend of magnesium fluosilicate, zinc fluosilicate and a wetting agent. Mixture contains not less than 2 pounds fluosilicate per gallon and does not interfere with adhesives and bonding.

PART 3 EXECUTION

3.1 PREPARATION

A. Examine the areas and conditions under which work of this section will be performed.

B. Correct conditions detrimental to timely and proper finishing.

C. Do not proceed until unsatisfactory conditions are corrected.

3.2 FINISHING HORIZONTAL SLABS

A. **Do not apply water (i.e. sprinkle) to any surface of concrete when finishing slabs.**

B. Edges and Joints: Tools may be made out of steel. Preferred is wood, aluminum or magnesium.

C. Tolerances:

1. Class A: 1 in 1000.
2. Class B: 1 in 500.
3. Class C: 1 in 250.

D. Float Finish: After concrete has been placed, consolidated, struck-off, and leveled, do not work further until ready for floating.

1. Begin floating when water sheen has disappeared and surface has sufficient stiffness.
2. During or after first floating, check planeness of entire surface with a 10 feet long straightedge applied at 2 or more different angles.
3. Cut down high spots and fill low spots to the required tolerance.
4. Refloat slab immediately to a uniform sandy texture.

E. Trowel Finish:

1. Do not use steel trowel or a power trowel on exterior concrete or on concrete that contains more than 3 percent air.
2. First troweling shall produce smooth surface relatively free of defects but which may still show some trowel marks.
3. Second troweling after surface has stiffened shall make finished surface essentially free of trowel marks, uniform in texture and appearance.
4. On surfaces intended to support floor coverings, grind off defects that would show through floor covering.

F. Broom or Belt Finish: Sweep surface with brushes, rakes, tines or burlap belt before final set.

G. "Dry Shake" Finish: Give the surface a floated finish. Evenly apply approximately 2/3 of a blended unsegregated material.

1. Begin floating immediately after application of first "dry shake".
2. After material has been embedded by floating, apply remainder of blended material to surface at right angles to previous application.
3. Make second application heavier in any areas not sufficiently covered by first application.
4. Immediately follow with second floating.
5. After selected material has been embedded by second floating, complete operation with a broomed, floated, or troweled finish, as indicated.

H. Non-slip Finish: Give surface a "dry shake" application, using crushed ceramically bonded aluminum oxide particles. Apply at 25 pounds per 100 square feet.

I. Exposed Aggregate Finish: Immediately after surface of concrete has been leveled to tolerance and surface water has dissipated, spread aggregate uniformly over surface to provide complete coverage to the depth of a single stone.

1. Embed aggregate into surface by light tamping.
2. Float surface until embedded aggregate is fully coated with mortar and surface has been brought to tolerance.
3. Start exposure of aggregate after matrix has hardened sufficiently to prevent dislodgment.
4. Flow ample quantities of water, without force, over surface of concrete while matrix encasing aggregate is removed by brushing with a fine bristle brush.
5. Continue until aggregate is uniformly exposed.
6. An approved chemical retarder sprayed onto freshly floated surface may be used to extend working time.

J. Chemical-Hardener Finish: Apply liquid chemical-hardener finish to interior concrete floors where indicated. Do not apply liquid chemical hardener on floor areas scheduled to receive synthetic matrices terrazzo, setting beds for tile, terrazzo, vinyl flooring, or like items. Apply hardener after complete curing and drying of concrete surface per manufacturer's recommendations. Evenly apply each coat, and allow 24 hours for drying between coats. After final coat of chemical-hardener solution is applied and dried, remove surplus hardener by scrubbing and mopping with water.

3.3 FINISHING FORMED SURFACES

A. General:

1. Allow concrete to cure not more than 72 hours before commencing surface finish operations, unless approved otherwise.
2. Revise the finishes as needed to secure approval.

B. As-Cast Form Finish:

1. Rough: Patch defects, chip or rub off fins exceeding 1/4 inch height.
2. Smooth: Patch tie holes and defects and remove fins completely.
   a. When surface texture is impaired and form joints misaligned, grind, bush-hammer, or correct affected concrete.
   b. Slurry grout areas evidencing minor mortar Leakage to match adjacent concrete.
   c. Repair major mortar Leakage as a defective area.
   d. When workmanship is less than acceptable standard, provide one of rubbed finishes at no additional cost to OWNER.

C. Rubbed Finish:

1. Smooth Rubbed: Remove forms and perform necessary patching as soon after placement as possible.
   a. Finish newly hardened concrete no later than 24 hours following form removal.
   b. Wet surfaces and rub with carborundum brick or other abrasive until uniform color and texture are produced.
2. Grout Cleaned: Undertake no cleaning operations until all

contiguous surfaces are completed and accessible.

a. Wet surface of concrete sufficiently to prevent absorption of water from grout.
b. Apply grout uniformly.
c. Immediately after grouting, scrub surface with cork float or stone to coat surface and fill voids.
d. While grout is still plastic, remove excess grout by working surface with rubber float or sack.
e. After surface whitens from drying, rub vigorously with clean burlap.
f. Keep damp for at least 36 hours after final rubbing.

3. Cork Floated: Remove forms within 2 to 3 days of placement where possible.
   a. Remove ties.
   b. Remove all burrs and fins.
   c. Dampen wall surface.
   d. Apply mortar with firm rubber float or with trowel, filling all surface voids.
   e. Compress mortar into voids.
   f. If mortar surface dries too rapidly to permit proper compaction and finishing, apply a small amount of water with fog sprayer.
   g. Produce final texture with cork float using a swirling motion.

D. Unformed Finish:

1. After concrete is placed, strike smooth, tops of walls or buttresses, horizontal offsets, and similar unformed surfaces occurring adjacent to formed surfaces.
2. Float to texture that is reasonably consistent with formed surfaces.
3. Continue final treatment on formed surfaces uniformly across uniformed surfaces.

E. Blasted Finish:

1. Perform abrasive blasting within 24 to 72 hours after casting.
2. Coordinate with form work construction, concrete placement schedule, and formwork removal to ensure that surfaces are blasted at the same age for uniform results.
3. Reapply curing protection after blast finishing

F. Architectural Finish: Refer to ACI 303.

1. Tooled Finish:

   a. Dress thoroughly cured concrete surface with electric, air, or hand tools to uniform texture, and give a bush hammered surface texture.

   b. Remove sufficient mortar to exposed coarse aggregate in relief and to fracture coarse aggregate for tooled finish.

G. Patched Finish:

1. Repair defective areas.
   a. Remove honeycomb and defective concrete to sound concrete.
   b. Make edges perpendicular to surface or slightly undercut.
   c. Featheredges are not permitted.
   d. Dampen area to be patched and at least 6 inches surrounding it to prevent absorption of patching mortar water.

e. Prepare bonding grout.
f. Mix to consistency of thick cream.
g. Brush into surface.

2. Tie Holes: Unless indicated otherwise, after being cleaned and thoroughly dampened, fill tie hole solid with patching mortar.
3. Make any patches in concrete to closely match color and texture of surrounding surfaces. Determine mix formula for patching mortar by trial and obtain a good color match with concrete when both patch and concrete are cured and dry.
   a. Mix white and gray Portland cement as required to match surrounding concrete to produce grout having consistency of thick paint.
   b. Use a minimum amount of mixing water.
   c. Mix patching mortar in advance and allow to stand without frequent manipulation, without addition of water, until it has reached stiffest placeable consistency.
   d. After initial set, dress surfaces of patches manually to obtain same texture as surrounding surfaces.
4. After surface water has evaporated from patch area, brush bond coat into surface.
   a. When bond coat begins to lose water sheen, apply patching mortar.
   b. Thoroughly consolidate mortar into place and strike-off to leave patch slightly higher than surrounding surface.
   c. Leave undisturbed for at least 1 hour before final finish.
   d. Keep patched area damp for 72 hours or apply curing compound.
   e. Do not use metal tools in finishing an exposed patch.
5. Where as-cast finishes are indicated, total patched area may not exceed 1 in 500 of as-cast surface. This is in addition to form tie patches, if ties are permitted to fall within as-cast areas.
6. In any finishing process which is intended to expose aggregate on surface, patched areas must show aggregate.
   a. Outer 1 inch of patch shall contain same aggregates as surrounding concrete.
   b. For aggregate transfer finish, patching mixture shall contain same selected colored aggregates.
   c. After curing, expose aggregates together with aggregates of adjoining surfaces by same process.

END OF SECTION

SECTION 03 39 00

CONCRETE CURING

PART 1 GENERAL

1.1 SECTION INCLUDES

A. Concrete curing requirements.

1.2 REFERENCES

A. ACI 301: Specifications for Structural Concrete for Buildings

B. ACI 305: Hot Weather Concreting.

C. ACI306: Cold Weather Concreting

D. ASTM C 171: Standard Specification for Sheet Materials for Curing Concrete.

E. ASTM C 1315: Standard Specification for Liquid Membrane-Forming Compounds Having Special Properties for Curing and Sealing Concrete.

1.3 SUBMITTALS

A. Curing agent data sheet.

B. Curing plan. Describe estimated cure quantity and procedure.

C. Manufacturer certificates, Section 01 33 00 that shows product meets performance criteria.

D. Manufacturer's recommended installation procedures which, when accepted by ENGINEER, will become the basis for accepting or rejecting installed product.

1.4 QUALITY ASSURANCE

A. Use workers knowledgeable of ACI 301, 305, 306.

1.5 PRODUCT HANDLING

A. Protect materials of this section before, during, and after installation.

B. Protect the work and materials of other trades.

C. In the event of damage, immediately make replacements and repair at no additional cost to OWNER.

1.6 WEATHER LIMITATIONS

A. Above 75 deg. F., ACI 305

B. Below 55 deg. F., ACI 306.

PART 2 PRODUCTS

2.1 COVERS

A. Water or Fog-spay: Clean, non-staining and non-detrimental to concrete.

B. Sheet Coverings: White waterproof paper, polyethylene film, or polyethylene coated burlap sheet complying with ASTM C 171.

C. Mat Coverings: Clean roll goods of cotton or burlap fabric.

D. Insulating Coverings: Non-staining curing blankets.

2.2 MEMBRANE FORMING COMPOUND

A. Material.

1. Styrene-acrylic.
2. Styrene-butadiene.
3. Alpha-methylstyrene.

B. Performance Criteria: ASTM C 1315 compound.

1. Type ID Class A (clear with fugitive dye), or
2. Type II Class A or B (white pigmented).

C. Volatile Organic Compounds (VOC): Comply with local, state and federal requirements.

PART 3 EXECUTION

3.1 PREPARATION

A. Do not use membrane forming curing compound on surfaces that are to receive hardeners.

B. Commence curing operation within 20 minutes after finishing.

3.2 APPLICATION – COVERS

A. Water: Apply water-fog spray or ponding.

B. Absorptive Mat: Place absorptive mat to provide coverage of concrete surfaces and edges. Lap over adjacent absorptive covers. Thoroughly saturate with water and keep continuously wet.

C. Moisture-Retaining Sheet: Place cover in widest practicable width with sides and ends lapped and sealed to prevent moisture loss. Repair any holes or tears during curing period.

D. Formed Surface Curing: Cure formed concrete surfaces, including underside of beams, supported slabs and other similar surfaces by moist curing with forms in place for full

curing period. If forms are removed prior to curing completion, applying cure film or penetrant or use methods indicated above, as applicable.

3.3 APPLICATION – MEMBRANE FORMING COMPOUND

A. Apply coating continuously and uniformly. Follow manufacturer's recommendations

B. Protect continuity of film coatings and repair damage during cure period.

C. If forms are removed before expiration of cure period, apply coating to unprotected areas.

3.4 CONCRETE CURE TEMPERATURE

A. During cure period, eliminate thermal shock of concrete by keeping cure temperature even throughout extent and depth of concrete.

3.5 SCHEDULE

A. Concrete Exposed to Potable Water (as in Water Storage reservoirs):

1. Moisture cover curing, or
2. Acrylic cure, or
3. Styreen acrylic silane co-polymer cure.

END OF SECTION

SECTION 32 1316

SEALING DECORATIVE CONCRETE PAVING WITH INTEGRAL COLOR

PART 1 - GENERAL

1.1 SUMMARY

A. This section includes sealing concrete flatwork paving

1.2 QUALITY ASSURANCE

A. Manufacturer's Qualifications: Licensed firms regularly engaged in manufacture of concrete products of types, materials, and sizes required, whose products have been in satisfactory use in similar service.

B. Installer Qualifications: Licensed firm regularly engaged in successful installation of concrete similar to that required for project.

C. Any deviation from the contract documents shall have written approval of owner and landscape architect.

1.3 SUBMITTALS

A. Product Data: Contractor shall submit product data as described herein.

PART 2 - PRODUCT

2.1 SEALER

A. Sealer shall be a penetrating sealer of silane or siloxane type.

PART 3 - EXECUTION

3.1 CURING AND SEALING OF PAVEMENT

A. The entire surface of the pavement, curbs and curb and gutters shall be uniformly sprayed with the designated curing and sealing compound below as early as concrete will properly allow.

B. Select curing product formulated to protect color integrity and apply per manufacturer's recommendation. Follow color admixture manufacturer's recommendations prior to curing by other methods. Curing with water is usually detrimental to color uniformity. Curing with burlap and other wet coverings, plastic sheeting, or other liquid-membrane type curing compounds should be avoid as they may cause mottling or staining.

C. Spread curing compound at manufacturer's recommendation. Do not pond or apply an excess spread of material for it will cause yellowing. Yellowing shall be removed and the curing and sealing material replaced at contractor's expense.

D. Apply sealer to concrete flatwork thirty to forty five days after concrete placement.

E. To protect the finished surfaces from dirt and moisture penetration, apply high-quality, clear water repellent sealer to concrete, as per manufacturer's instructions. Apply after the surfaces have been textured, patched and allowed to cure for a minimum of 28 days. Prior to general application, apply test section to the jobsite sample.

F. Curing compound and sealer can be applied by means of an inexpensive low pressure sprayer, (20-30 pounds pressure), fitted with neoprene hose, gaskets and washers.

G. Spread in two (2) directions at right angles.

H. In lieu of the above, concrete may be cured for 7 days with minimum 6 mil. polyethylene plastic, properly taped and anchored, then apply "Siloc-Seal" which shall be as per mfg.'s recommendations at maximum 125 sq. ft./gal. or apply Sonneborn "Kure and Seal" as per mfg.'s recommendations in 2 coats at 200 sq. ft./gal./ea. coat.

3.2 PROTECTION OF CONCRETE

A. The contractor shall protect the concrete work against all damage and markings. Barricades shall be placed at the proper locations to prevent traffic from using or marking the completed work.

B. When it is necessary to provide for traffic crossing, the contractor shall, at his expense, construct suitable and substantial crossings to bridge over the concrete, satisfactory to the architect. Newly laid concrete shall be protected from damage by rain or hail.

END OF SECTION

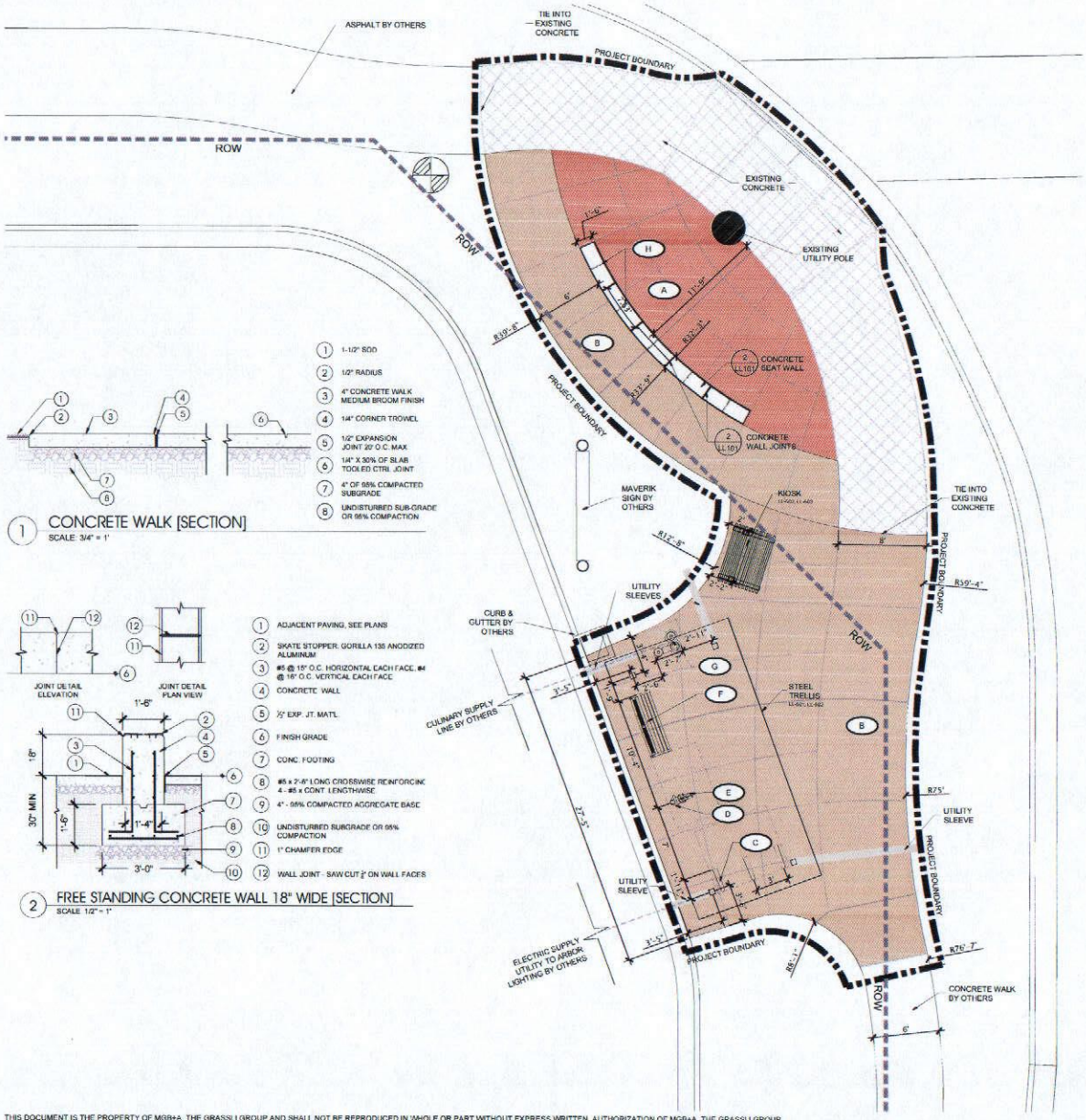

1 CONCRETE WALK [SECTION]
SCALE: 3/4" = 1'

1. 1-1/2" SOD
2. 1/2" RADIUS
3. 4" CONCRETE WALK MEDIUM BROOM FINISH
4. 1/4" CORNER TROWEL
5. 1/2" EXPANSION JOINT 20' O.C. MAX.
6. 1/4" X 30% OF SLAB TOOLED CTRL. JOINT
7. 4" OF 95% COMPACTED SUBGRADE
8. UNDISTURBED SUB-GRADE OR 95% COMPACTION

2 FREE STANDING CONCRETE WALL 18" WIDE [SECTION]
SCALE: 1/2" = 1'

1. ADJACENT PAVING, SEE PLANS
2. SKATE STOPPER: GORILLA 135 ANODIZED ALUMINUM
3. #5 @ 15" O.C. HORIZONTAL EACH FACE, #4 @ 16" O.C. VERTICAL EACH FACE
4. CONCRETE WALL
5. ½" EXP. JT. MAT'L
6. FINISH GRADE
7. CONC. FOOTING
8. #5 x 2'-6" LONG CROSSWISE REINFORCING 4 - #5 x CONT. LENGTHWISE
9. 4" - 95% COMPACTED AGGREGATE BASE
10. UNDISTURBED SUBGRADE OR 95% COMPACTION
11. 1" CHAMFER EDGE
12. WALL JOINT - SAW CUT ½" ON WALL FACES

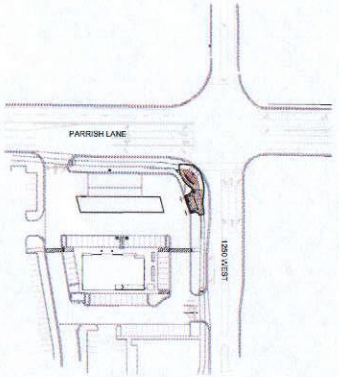

SITE CONTEXT MAP

MATERIAL SCHEDULE:

SYMBOL	LABEL	PRODUCT	AVAILABLE VIA	DETAIL
	A	CONCRETE 4" DEPTH COLOR: BRICK RED		1/LL101
	B	CONCRETE 4" DEPTH COLOR: ADOBE		1/LL101
	C	SURFACE MOUNTED BIKE RACK	FORMS+SURFACES: 800.451.0410	
	D	OUTDOOR BIKE PUMP WITH GAUGE	PARK-A-BIKE: 800.630.7225	
	E	BICYCLE WORK STAND	PARK-A-BIKE: 800.630.7225	
	F	BENCH PRODUCT: ML B450-M-L3	MAGLIN: 800.716.5506	
	G	WATER FOUNTAIN MODEL 101SSM	MOST DEPENDABLE FOUNTAINS: 1.800.502.8331	
	H	SKATE STOPPER: GORILLA 135	SKATE STOPPER: 619.447.8374	

NOTES:
1. COLORS SHOWN ARE FOR COMMUNICATION ONLY. ALL COLOR CONCRETE SHALL BE MIXED AND POURED PER DAVIS COLORED CONCRETE SYSTEM.
2. ALL CONCRETE TO RECEIVE MEDIUM BROOM FINISH
3. GRADING PLAN TO BE PROVIDED BY OTHERS. CONSTRUCT CONCRETE FLATWORK WITH 2%CROSS SLOPE MINIMUM TO ENSURE POSITIVE DRAINAGE
4. STEEL TRELLIS IS SHOWN FOR REFERENCE ONLY. CONTRACTOR TO OBTAIN SHOP DRAWINGS STAMPED BY STRUCTURAL ENGINEER, SHOWING PROPER BEAM SIZING, FOOTING DESIGN, AND OTHER CONSTRUCTION INFORMATION.
5. PLANTING AND IRRIGATION TO BE PROVIDED BY OTHERS.
6. ALL FURNISHINGS TO BE INSTALLED PER MANUFACTURER REQUIREMENTS

CALL BEFORE YOU DIG.
IT'S FREE AND IT'S THE LAW.
BLUE STAKES OF UTAH
Utility Notification Center, Inc.
1-800-662-4111
www.bluestakes.org
Dig Safely.

Scale: 1" = 5'-0"

MGB+A
Urban Designers
Land Planners
Landscape Architects
145 West 200 South
Salt Lake City, Utah 84101
Tel (801) 364-9090
Fax (801) 364-5710
www.grassligroup.com

NOT FOR CONSTRUCTION

1250 WEST TRAILHEAD

DD REVIEW 04-06-2016

1250 W PARRISH LANE
CENTERVILLE, UTAH

Project #: 15-109
Drawn: DS Checked:
Date: Status:

Sheet Name:
LAYOUT PLAN

Sheet Number:
LL101

THIS DOCUMENT IS THE PROPERTY OF MGB+A, THE GRASSLI GROUP AND SHALL NOT BE REPRODUCED IN WHOLE OR PART WITHOUT EXPRESS WRITTEN AUTHORIZATION OF MGB+A, THE GRASSLI GROUP.
File Name: P:\Projects\15-123 Centerville Founders Park and 1250 West\02-Working\01-Drawings\02-DD\15-123 Layout.dwg

Notes:
To facilitate the inclusion of light fixtures:
ICON will provide all the electrical cutouts, but they do not spec specific light fixtures. ICON will send the client a form where they select the location and type of electrical access these will then be detailed in the sealed shop drawings.

Contractor will obtain and submit stamped and sealed engineered drawings to client for approval prior to ordering

COLOR: ALMOND PER THE ICON COLOR CHART OR OTHER AS SPECIFIED BY OWNER.

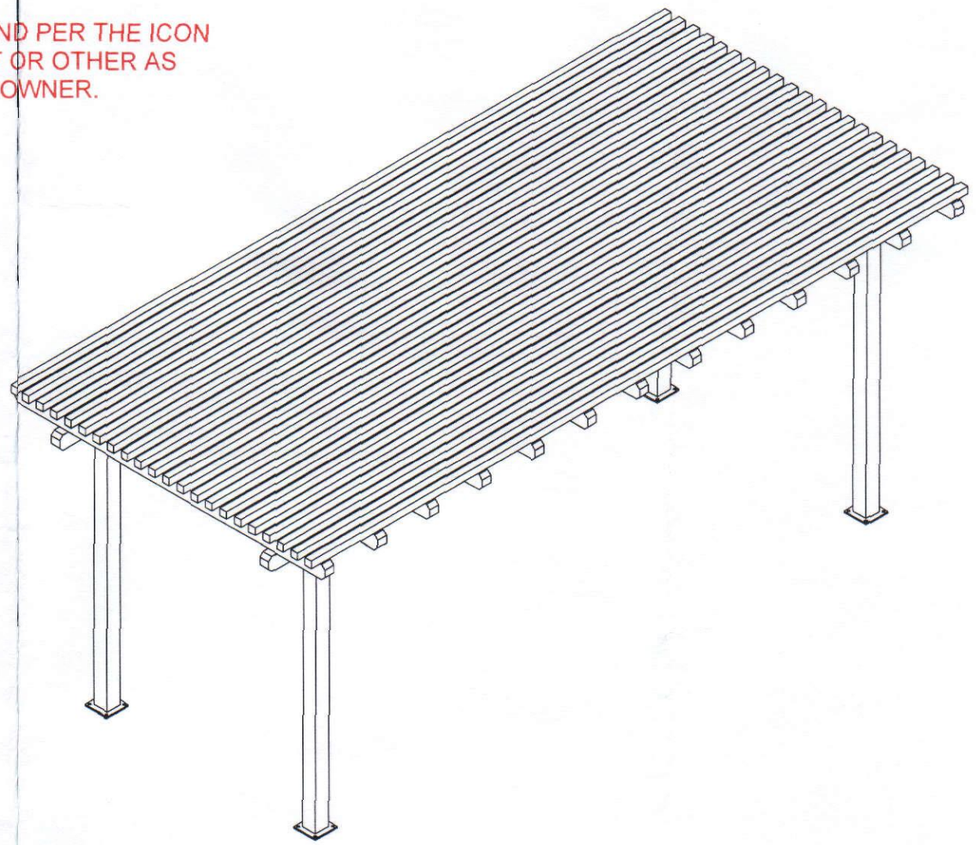

LIGHT FIXTURE LOCATIONS
ON INSIDE OF MAIN BEAM

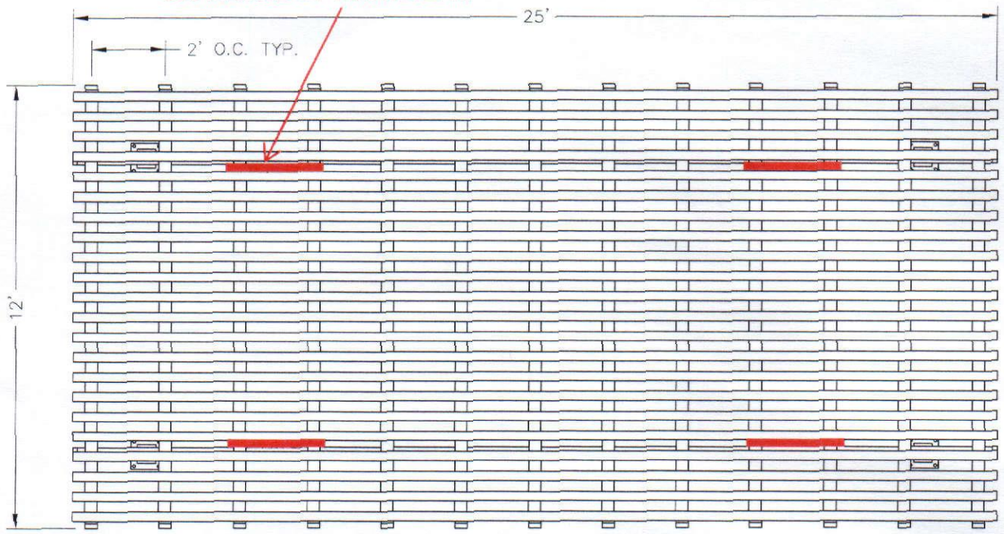

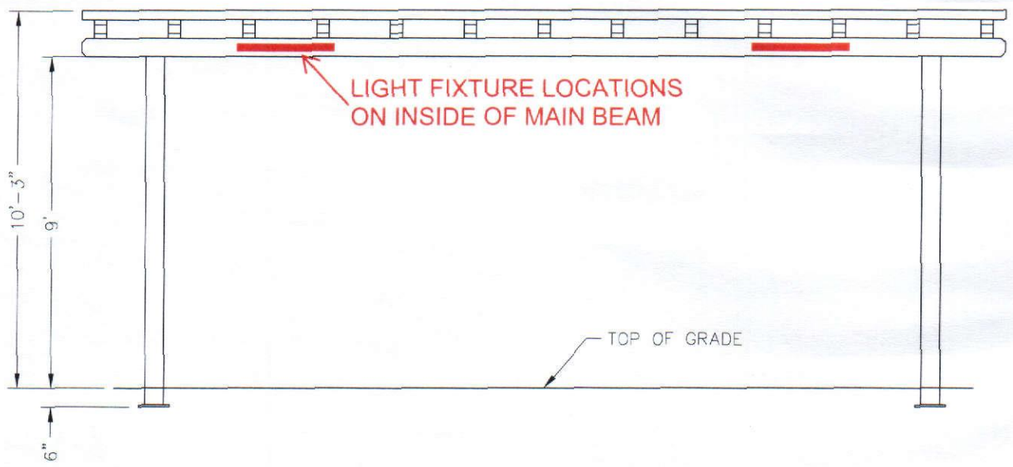

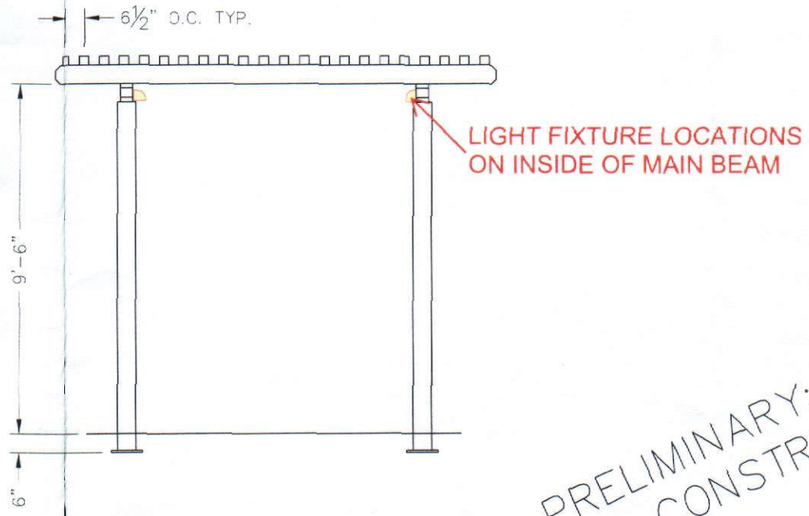

PRELIMINARY: NOT FOR CONSTRUCTION

ICON
Shelter Systems Inc
DISTINCTIVE STEEL SHELTERS
WWW.ICONSHELTERS.COM
COPYRIGHT 2004, ICON SHELTER SYSTEMS, INC.
1455 LINCOLN AVE.
HOLLAND MI, 49423

616.396.0919
800.748.0985
616.396.0944 FX

Elevation

DRAWN BY:
ACP
DATE:
4/8/2016
JOB NO.:
STANDARD
REVISION:
A
BUILDING TYPE:
AR12X25-9K
PROJECT NAME:

TRELLIS
SCHEMATIC
LL-501

DWG: \Company\Engineering\Standards\Shelters\AR\12X25\K-45-90-150\Drawings\Preliminary\AR12x25-9K-P0-45-90-150~43212.DWG

Z (INSIDE OF BUILDING)

Y

THESE FOUNDATION LOADS ARE FOR ESTIMATING PURPOSE ONLY.
THE ACTUAL LOADS WILL BE DETERMINED IN THE FINAL ENGINEERING

CL1

LOADS TO FOUNDATION (KIPS, IN-KIPS)	FOUNDATION LOADS				
LOAD COMBINATION	AXIAL (Fx)	SHEAR (Fy)	SHEAR (Fz)	MOMENT (My)	MOMENT (Mz)
DL	1.66	-0.56	0.04	-1.76	-22.37
SL	3.51	-1.30	0.12	-4.46	-51.87
W-UPLIFT	-0.74	1.07	0.00	0.21	72.87
W-FY	0.74	-1.07	0.00	-0.21	-72.87
W-FZ	-0.11	-0.77	-0.02	0.77	-61.01
E-FY	0.71	-2.08	-0.02	0.63	-151.20
E-Z	-1.88	-0.04	-2.08	147.00	-1.70

NOTES:
- TABLE SHOWS UNFACTORED SERVICE LOADS
- A FOUNDATION DESIGN HAS NOT BEEN PERFORMED BY ICON SHELTER SYSTEMS INC.
- A LICENSED ENGINEER FAMILIAR WITH SOIL CONDITIONS AT CONSTRUCTION SITE MUST PERFORM A FOUNDATION DESIGN.
- THE STRUCTURE HAS BEEN ENGINEERED AS AN OPEN STRUCTURE.
- CONSULT ICON SHELTER SYSTEMS INC. IF THE STRUCTURE IS TO BE ENCLOSED.
- COORDINATES ARE LOCAL TO THE COLUMN

DEFINITIONS:
DL = SERVICE LEVEL DEAD LOAD REACTION WITH THE GREATEST AXIAL LOAD
SL = SERVICE LEVEL SNOW LOAD REACTION WITH THE GREATEST AXIAL LOAD
W-UL = SERVICE LEVEL WIND LOAD REACTION WITH THE GREATEST UPLIFT LOAD
W-Y = SERVICE LEVEL WIND LOAD REACTION WITH THE GREATEST MAGNITUDE OF SHEAR IN THE LOCAL Y DIRECTION
W-Z = SERVICE LEVEL WIND LOAD REACTION WITH THE GREATEST SHEAR VALUE ACTING IN THE SAME DIRECTION AS THE DL SHEAR LOAD
E-Y = SERVICE LEVEL SEISMIC LOAD REACTION WITH THE GREATEST MAGNITUDE OF SHEAR IN THE LOCAL Y DIRECTION
E-Z = SERVICE LEVEL SEISMIC LOAD REACTION WITH THE GREATEST MAGNITUDE OF SHEAR IN THE LOCAL Z DIRECTION

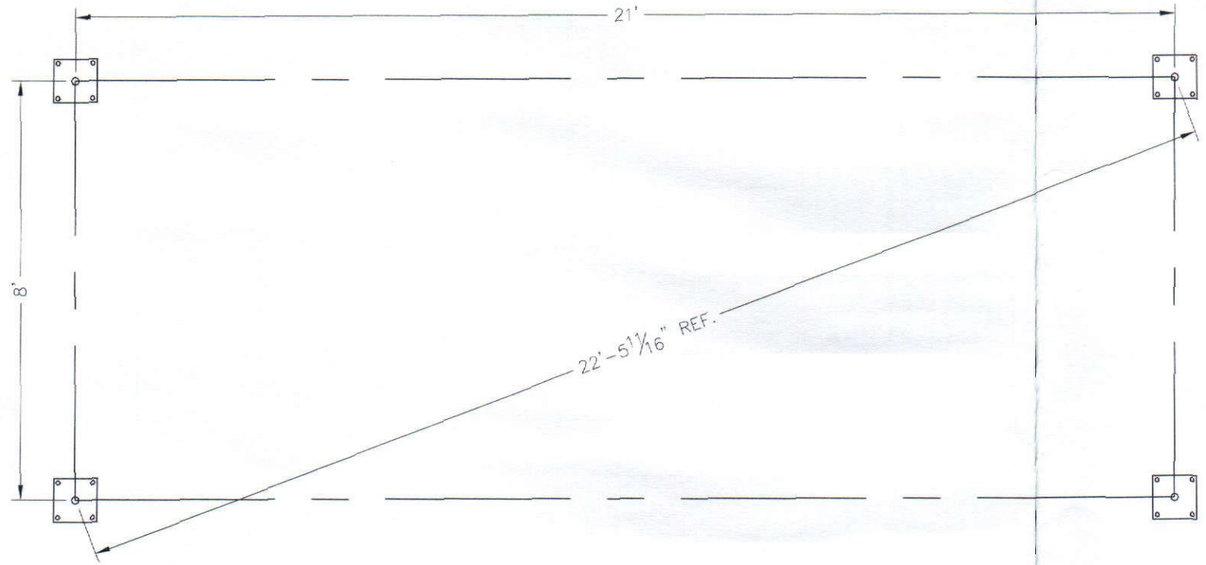

Notes:
To facilitate the inclusion of light fixtures:
ICON will provide all the electrical cutouts, but they do not spec specific light fixtures. ICON will send the client a form where they select the location and type of electrical access these will then be detailed in the sealed shop drawings.

Contractor will obtain and submit stamped and sealed engineered drawings to client for approval prior to ordering

PRELIMINARY: NOT FOR CONSTRUCTION

ALL STRUCTURAL COMPONENTS WILL BE:
TUBE: ASTM A500 GRADE B
PLATE: ASTM A36
BOLTS: ASTM A325
NUTS: ASTM A563
WELDING: GMAW

NOTE:
COLUMN SIZE: HSS 6x6x3/16

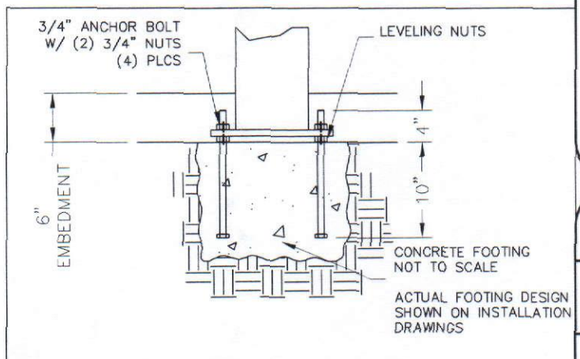

PRELIMINARY DRAWINGS SHOWN AS 6" BURIED

STANDARD BASE CONNECTION
COLUMN TYPE: A (6" BURIED)

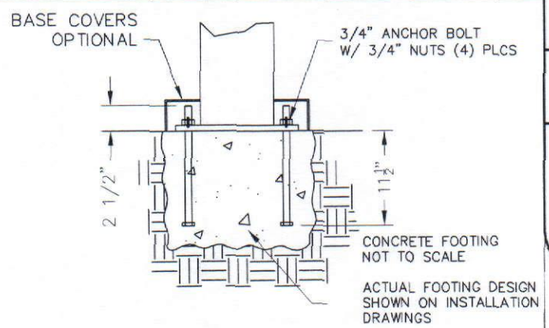

OPTIONAL BASE CONNECTION
COLUMN TYPE: B (SURFACE MOUNT W/ COVERS)

ICON
Shelter Systems Inc
DISTINCTIVE STEEL SHELTERS
WWW.ICONSHELTERS.COM
COPYRIGHT 2004, ICON SHELTER SYSTEMS, INC.
1455 LINCOLN AVE.
HOLLAND MI, 49423

616.396.0919
800.748.0985
616.396.0944 FX

Anchor Bolt Layout

DRAWN BY:	ACP
DATE:	4/8/2016
JOB NO.:	STANDARD
REVISION:	A
BUILDING TYPE:	AR12X25-9K
PROJECT NAME:	

TRELLIS
SCHEMATIC
LL-502

DWG: \Company\Engineering\Standards\Shelters\AR\12X25\K-45-90-150\AR12x25-9K-P0-45-90-150~43212.DWG

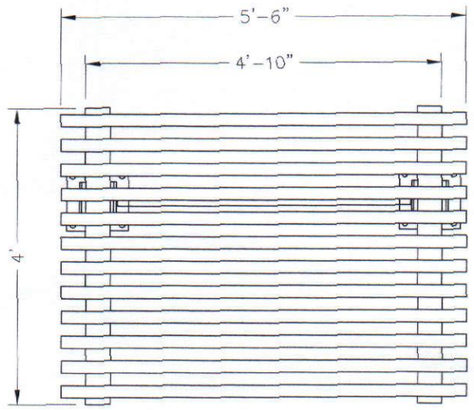

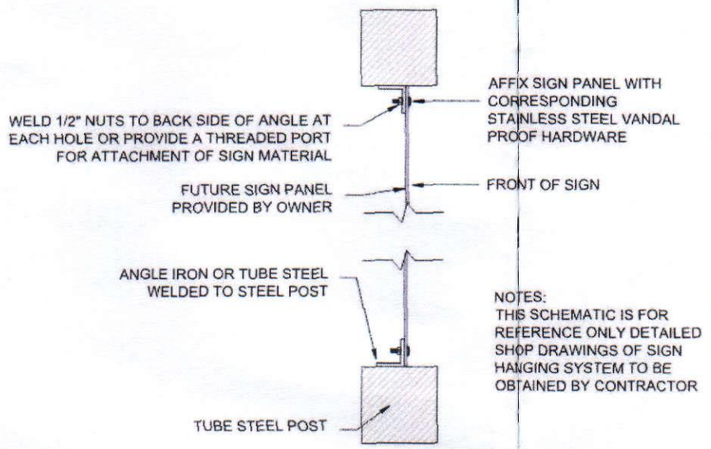

KIOSK SIGN MATERIAL ATTACHMENT
NOT TO SCALE

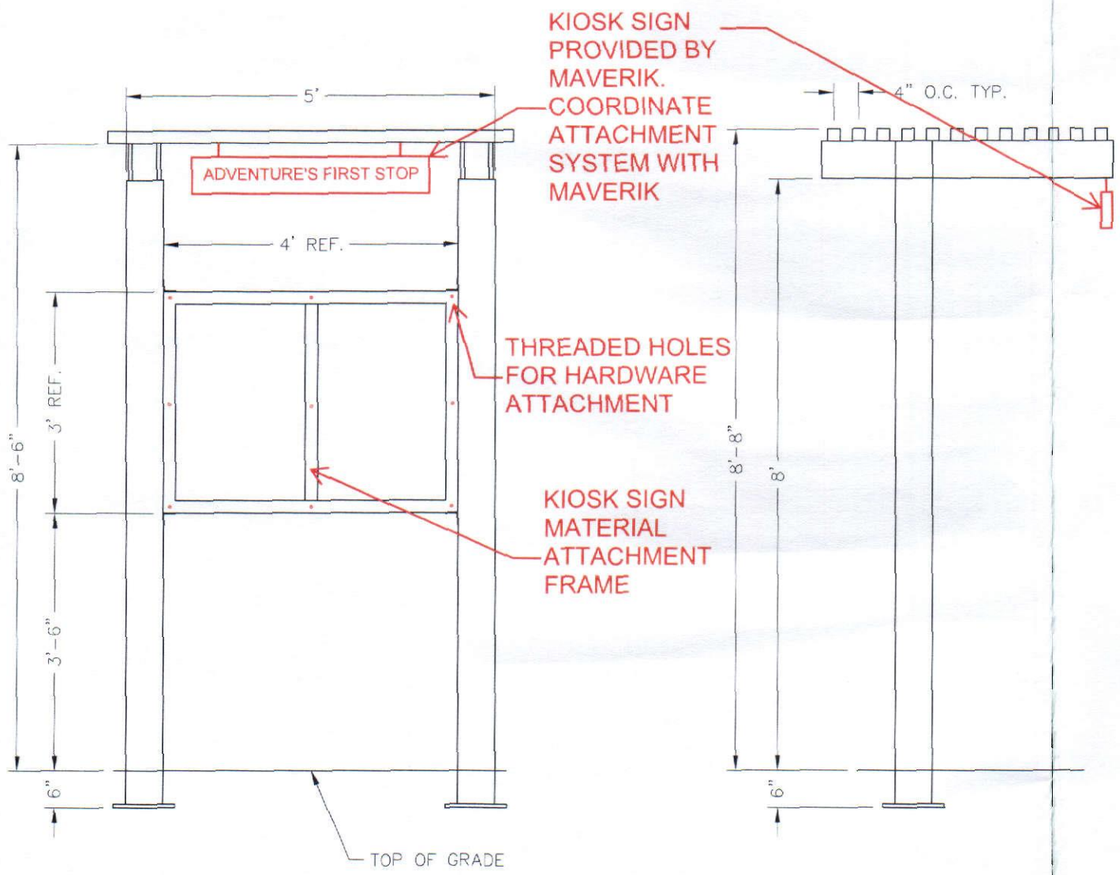

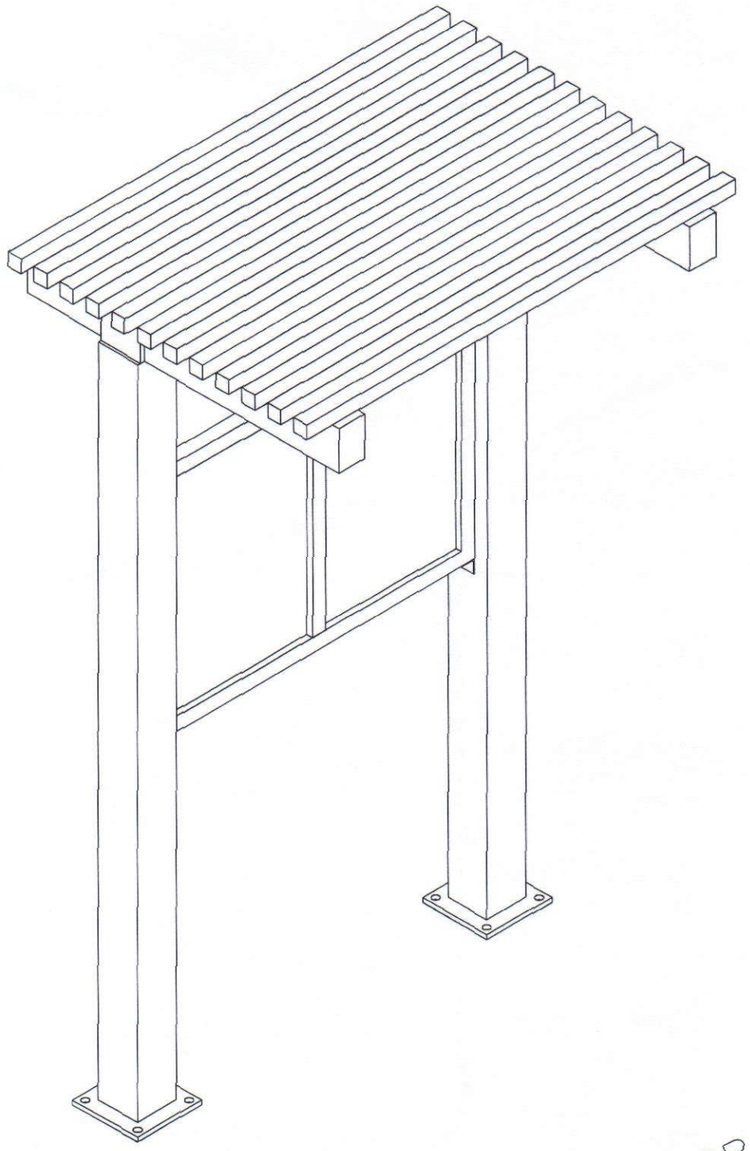

Notes:
Contractor will obtain and submit stamped and sealed engineered drawings to client for approval prior to ordering

COLOR: ALMOND PER THE ICON COLOR CHART OR OTHER AS SPECIFIED BY OWNER.

PRELIMINARY: NOT FOR CONSTRUCTION

ICON
Shelter Systems Inc
DISTINCTIVE STEEL SHELTERS
WWW.ICONSHELTERS.COM
COPYRIGHT 2004, ICON SHELTER SYSTEMS, INC.
1455 LINCOLN AVE.
HOLLAND MI, 49423

616.396.0919
800.748.0985
616.396.0944 FX

Elevation

DRAWN BY:
ACP
DATE:
4/8/2016
JOB NO.:
STANDARD
REVISION:
A
BUILDING TYPE:
AS4X5K
PROJECT NAME:

KIOSK
SCHEMATIC
LL-503

DWG: \\iss-server02\Company\Engineering\Standards\Shelters\AS\4X5\K-45-90-150\Drawings\Preliminary\AS4x5K-P0-45-90-150~43211.DWG

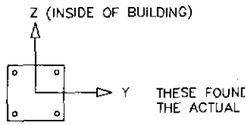

THESE FOUNDATION LOADS ARE FOR ESTIMATING PURPOSE ONLY.
THE ACTUAL LOADS WILL BE DETERMINED IN THE FINAL ENGINEERING

CL1

LOADS TO FOUNDATION (KIPS, IN-KIPS)	FOUNDATION LOADS				
LOAD COMBINATION	AXIAL (Fx)	SHEAR (Fy)	SHEAR (Fz)	MOMENT (My)	MOMENT (Mz)
DL	0.34	-0.01	0.00	1.22	-0.48
SL	0.78	-0.05	0.00	4.46	-2.08
W-UPLIFT	-0.34	0.02	0.00	-1.95	0.91
W-FY	-0.33	0.11	-0.01	-0.62	7.39
W-FZ	0.09	0.08	-0.01	1.77	6.27
E-FY	-1.63	1.38	-0.13	8.12	99.44
E-Z	0.00	0.00	-1.38	148.05	0.00

NOTES:
- TABLE SHOWS UNFACTORED SERVICE LOADS
- A FOUNDATION DESIGN HAS NOT BEEN PERFORMED BY ICON SHELTER SYSTEMS INC.
- A LICENSED ENGINEER FAMILIAR WITH SOIL CONDITIONS AT CONSTRUCTION SITE MUST PERFORM A FOUNDATION DESIGN.
- THE STRUCTURE HAS BEEN ENGINEERED AS AN *OPEN STRUCTURE*.
- CONSULT ICON SHELTER SYSTEMS INC. IF THE STRUCTURE IS TO BE ENCLOSED.
- COORDINATES ARE LOCAL TO THE COLUMN

DEFINITIONS:
DL = SERVICE LEVEL DEAD LOAD REACTION WITH THE GREATEST AXIAL LOAD
SL = SERVICE LEVEL SNOW LOAD REACTION WITH THE GREATEST AXIAL LOAD
W-UL = SERVICE LEVEL WIND LOAD REACTION *WITH THE GREATEST UPLIFT LOAD*
W-Y = SERVICE LEVEL WIND LOAD REACTION WITH THE GREATEST MAGNITUDE OF SHEAR IN THE LOCAL Y DIRECTION
W-Z = SERVICE LEVEL WIND LOAD REACTION WITH THE GREATEST SHEAR VALUE ACTING IN THE SAME DIRECTION AS THE DL SHEAR LOAD
E-Y = SERVICE LEVEL SEISMIC LOAD REACTION WITH THE GREATEST MAGNITUDE OF SHEAR IN THE LOCAL Y DIRECTION
E-Z = SERVICE LEVEL SEISMIC LOAD REACTION *WITH THE GREATEST MAGNITUDE OF* SHEAR IN THE LOCAL Z DIRECTION

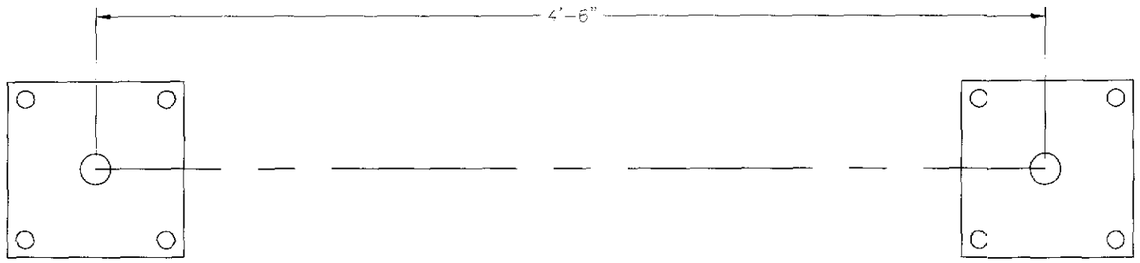

PRELIMINARY: NOT FOR CONSTRUCTION

ALL STRUCTURAL COMPONENTS WILL BE:
TUBE: ASTM A500 GRADE B
PLATE: ASTM A36
BOLTS: ASTM A325
NUTS: ASTM A563
WELDING: GMAW

NOTE:
COLUMN SIZE: HSS 6x6x3/16

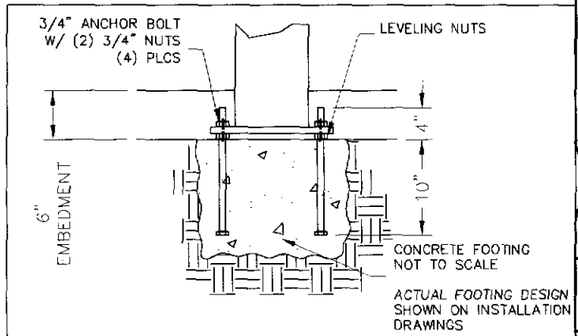

PRELIMINARY DRAWINGS SHOWN AS 6" BURIED

STANDARD BASE CONNECTION
COLUMN TYPE: A (6" BURIED)

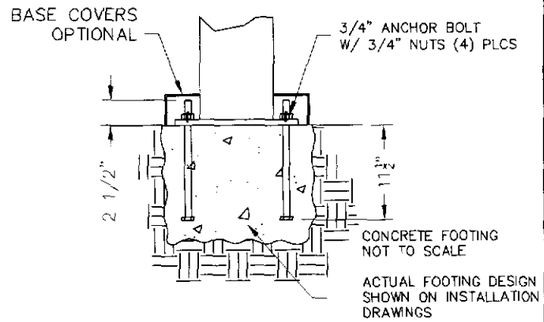

OPTIONAL BASE CONNECTION
COLUMN TYPE: B (SURFACE MOUNT W/ COVERS)

ICON
Shelter Systems Inc
DISTINCTIVE STEEL SHELTERS
WWW.ICONSHELTERS.COM
COPYRIGHT 2004, ICON SHELTER SYSTEMS, INC.
1455 LINCOLN AVE.
HOLLAND MI, 49423

616.396.0919
800.748.0985
616.396.0944 FX

Anchor Bolt Layout

DRAWN BY:	ACP
DATE:	4/8/2016
JOB NO.:	STANDARD
REVISION:	A
BUILDING TYPE:	AS4X5K
PROJECT NAME:	

KIOSK
SCHEMATIC
LL-504

DWG: \\iss-server02\Company\Engineering\Standards\Shelters\AS4X5\K-45-90-150\Drawings\Preliminary\AS4x5K-P0-45-90-150-43211.DWG

PRODUCT DETAIL CUT SHEETS

1250 WEST PARRISH LANE TRAILHEAD

CENTERVILLE UTAH, 84014

Design Development Review

April, 14 2016

MGB+A

The Grassli Group

MGB+A
The Grassli Group

MGB+A Product Technical Cut Sheet Index

1250 West Parrish Lane Trailhead

Product Technical Cut Sheet Index

1 – Bay City Bike Rack – SKBAY-TD

2 – High Security Public Bike Pump – PB-141136

3 – Public Work Stand - PB-111110

4 – Maglin Bench - MLB450-M-L3

5 – MDF Water Fountain - 10155SM

6 – Skate Stopper – GORILLA 135

7 – Millenium Finite Lighting – FNL6 SERIES – Individual Mount

End

145 west 200 south • salt lake city, utah 84101 • p 801.364.9719 • f 801.364.9719 • www.grassligroup.com

PRODUCT DETAIL CUT SHEETS

1250 WEST PARRISH LANE TRAILHEAD

CENTERVILLE UTAH, 84014

Design Development Review

April, 14 2016

MGB+A
The Grassli Group

MGB+A
The Grassli Group

MGB+A Product Technical Cut Sheet Index

1250 West Parrish Lane Trailhead

Product Technical Cut Sheet Index

1 – Bay City Bike Rack – SKBAY-TD

2 – High Security Public Bike Pump – PB-141136

3 – Public Work Stand - PB-111110

4 – Maglin Bench - MLB450-M-L3

5 – MDF Water Fountain - 10155SM

6 – Skate Stopper – GORILLA 135

7 – Millenium Finite Lighting – FNL6 SERIES – Individual Mount

End

145 west 200 south • salt lake city, utah 84101 • p 801.364.9719 • f 801.364.9719 • www.grassligroup.com

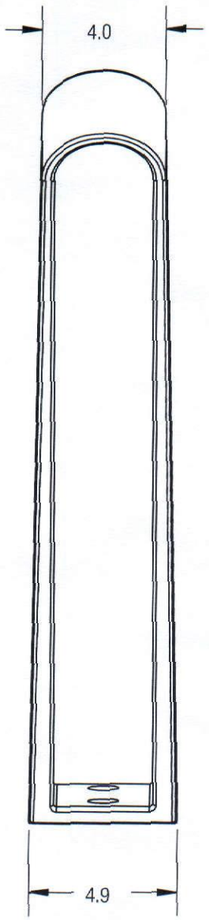

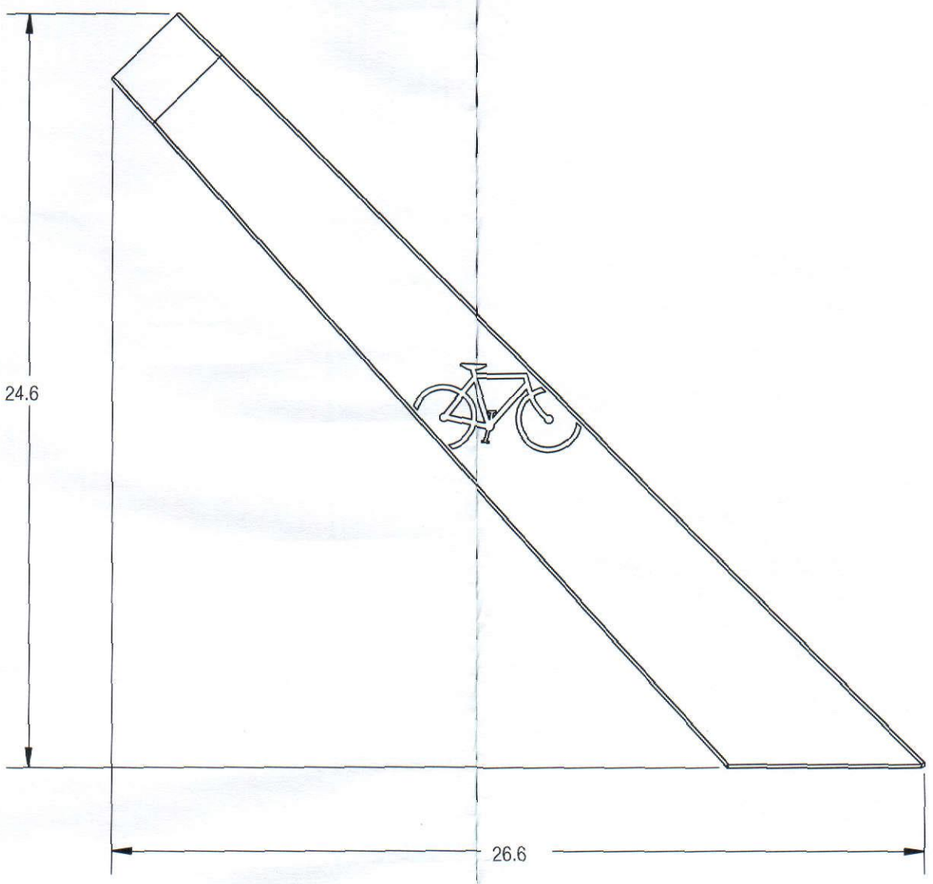

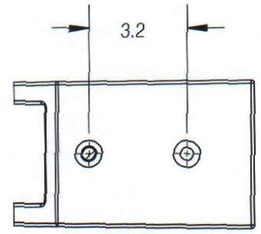

FINISH: POWDER COAT COLOR: SILVER TEXTURE

CUSTOMER APPROVAL:

X_____

DATE:

X_____

UNLESS OTHERWISE SPECIFIED, DIMENSIONS ARE IN INCHES

TOLERANCES (UNLESS OTHERWISE SPECIFIED):
FRACTIONAL: ±1/32
ANGULAR/BEND: ±1°
TWO PLACE DECIMAL ±.030
THREE PLACE DECIMAL ±.020

MATERIAL: SEE DATA SHEET

FINISH: SEE DATA SHEET

WEIGHT: 18 LBS

SOURCE: -

SCALE: N.T.S.

DO NOT SCALE DRAWING

PROPRIETARY AND CONFIDENTIAL

THE INFORMATION CONTAINED IN THIS DRAWING IS THE SOLE PROPERTY OF FORMS + SURFACES . ANY REPRODUCTION IN PART OR AS A WHOLE WITHOUT WRITTEN PERMISSION IS PROHIBITED.

FORMS+SURFACES® 30 Pine Street, Pittsburgh, PA 15223
Tel (800) 451-0410 Fax (412) 781-7840

DATE 01/01/2011

BAY CITY BIKE RACK
SKBAY

SIZE	DWG. NO.	REV	SHEET
B	SKBAY-TD	0	1 OF 1

Park A Bike
smart racks | smart solutions

Public Work Stand - PB-111110 Specs

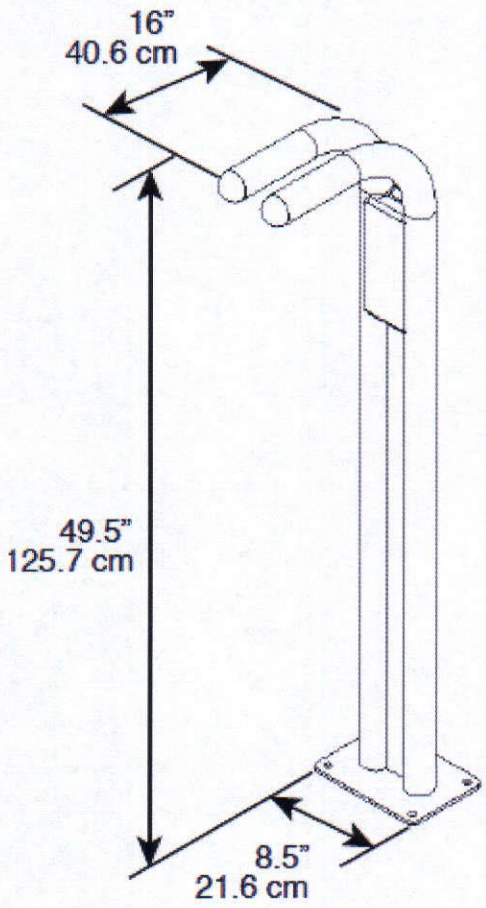

MATERIALS

Thick-walled DOM tubing
TIG welded to laser-cut steel
Stainless steel aircraft cable

Added cabled tools are available

FINISH

UV Resistant Powder Coat (custom colors available)

~~Stainless Steel~~
~~Galvanized Steel~~

COLOR: SUNSET ORANGE - RAL 2011

MOUNTING

Surface Mount

Bolts to concrete with 3/8" anchors

Note: this unit is to be mounted to concrete only.

MINIMAL SPACE USE RECOMMENDATION

NOTE: These setbacks are for the bike pump and work stand when installed together

Public Work Stand

Walls or Object Setbacks: Minimum 48"
Parallel Wall Setbacks: Minimum 12"
Perpendicular Street Setbacks: Minimum 60"
Parallel Street Setbacks: Minimum 96"
*These are our suggested minimal clearances

Public Bike Pump or High Security Bike Pump

Mount in-line with the flange for the Work Stand maximum 6" away.

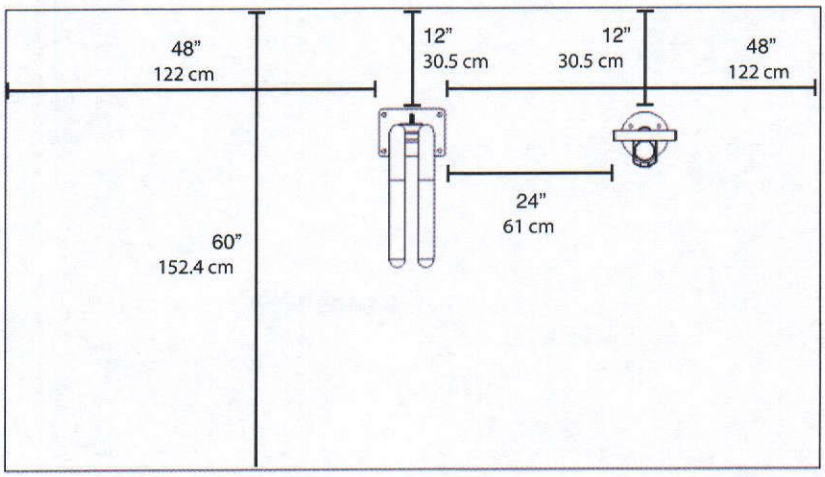

parkabike.com | P: 800 630-7225 | info@parkabike.com

The images and information herein are the sole property of Park a Bike, Inc. and any reproduction in part or in whole without prior written consent of Park a Bike, Inc. is strictly prohibited

www.bikefixtation.com

2647 37th Ave. S Unit 1 Minneapolis MN 55406
Phone: 612-568-3498 • E-mail: info@bikefixtation.com

Bike Fixtation powder coat colors

Bike Fixtation Red

Cycle Track Black
RAL 9017

Sunset Orange
RAL 2011

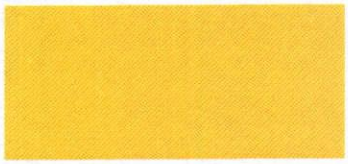

Signal Yellow
RAL 1023

Sprout Green
RAL 6018

Spruce Green
RAL 6005

Park Tool Blue*
RAL 5017

Bark Brown
RAL 8019

Granite Gray
RAL 7045

Matter Gray
RAL 7016

Custom Colors available for a small fee

*The color blue is a trademark of Park Tool Co. and is used under license.

Park A Bike
smart racks | smart solutions

High Security Public Bike Pump - PB-141136 Specs

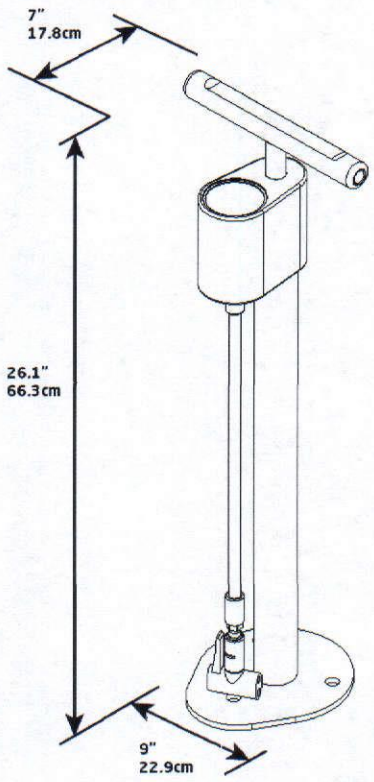

MATERIALS

Stainless steel exterior
Rubber exterior and braided steel core hose
Presta/Schrader pump head
Impact resistant pressure gauge

FINISH

POWDER COAT COLOR:
SUNSET ORANGE - RAL 2011

~~Stainless Steel~~
~~Long-lasting, highly durable and reisitant to damage from harsh weather~~

MOUNTING

Surface Mount
In-Ground Mount

MINIMAL SPACE USE RECOMMENDATION

Note: These setbacks are for the bike pump and work stand when installed together

Public Work Stand

Walls or Object Setbacks: Minimum 48"
Parallel Wall Setbacks: Minimum 12"
Perpendicular Street Setbacks: Minimum 60"
Parallel Street Setbacks: Minimum 96"
*These are our suggested minimal clearances

High Security Public Bike Pump

Mount in line with the flange for the Work Stand maximum 6" away.

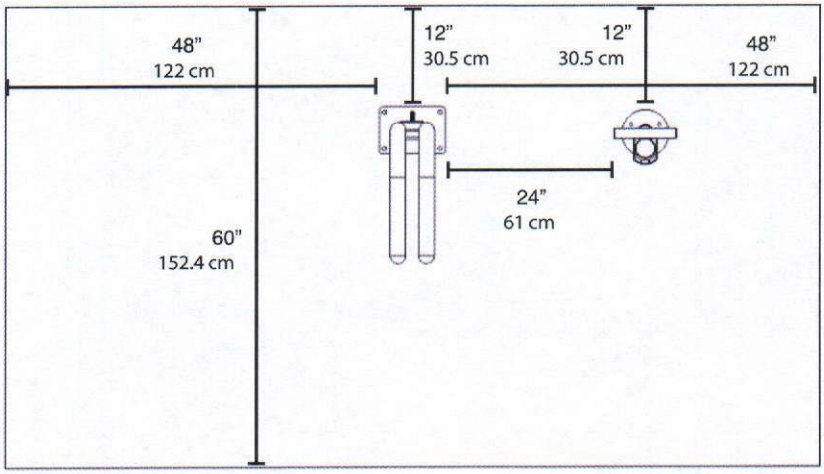

parkabike.com | P: 800 630-7225 | info@parkabike.com

The images and information herein are the sole property of Park a Bike, Inc. and any reproduction in part or in whole without prior written consent of Park a Bike, Inc. is strictly prohibited

450 SERIES

MLB450-M-L3

MATERIALS: Bench frame and seat is made from H.S. steel and flat bar. The back is constructed using lasered steel panels or H.S. steel.

FINISH: All steel components are protected with E-Coat rust proofing.
The Maglin Powdercoat System provides a durable finish on all metal surfaces. Wood slats are finished with penetrating sealers.

INSTALLATION: The bench is delivered pre-assembled. Holes (0.5") are provided in each foot for securing to base.

TO SPECIFY: Select MLB450-M-L3
Choose:
- Powdercoat Color

COLOR: SILVER14
FINETEX

OPTIONS: - Custom Laser Designs

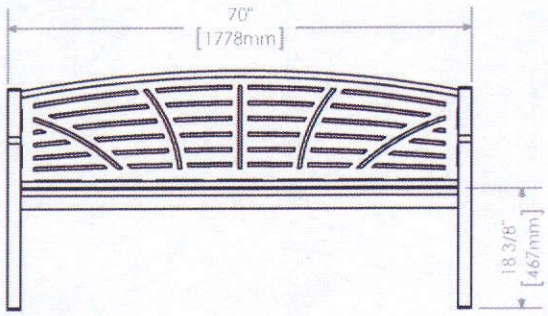

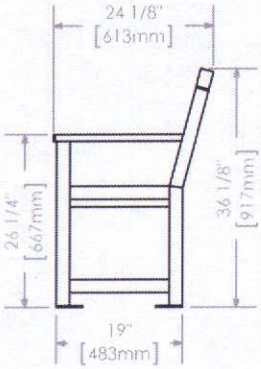

DIMENSIONS:

Height:	36.13" (91.7cm)
Length:	70" (177.8cm)
Depth:	24.13" (61.3cm)
Weight:	184.26lbs (83.6kg)

MAGLIN

T 800-716-5506
F 877-260-9393
WWW.MAGLIN.COM
SALES@MAGLIN.COM

- All drawings, specifications, design and details on this page remain the property of Maglin Site Furniture Inc. and may not be used without Maglin authorization.
- Details and specifications may vary due to continuing improvements of our products.

MOST DEPENDABLE FOUNTAINS, INC.

MOST DEPENDABLE FOUNTAINS, INC.
5705 COMMANDER DR. P.O. BOX 587
ARLINGTON, TN 38002-0587
TOLL FREE: 1-800-552-6331
PHONE: (901) 867-0039
FAX: (901) 867-0159
www.mostdependable.com

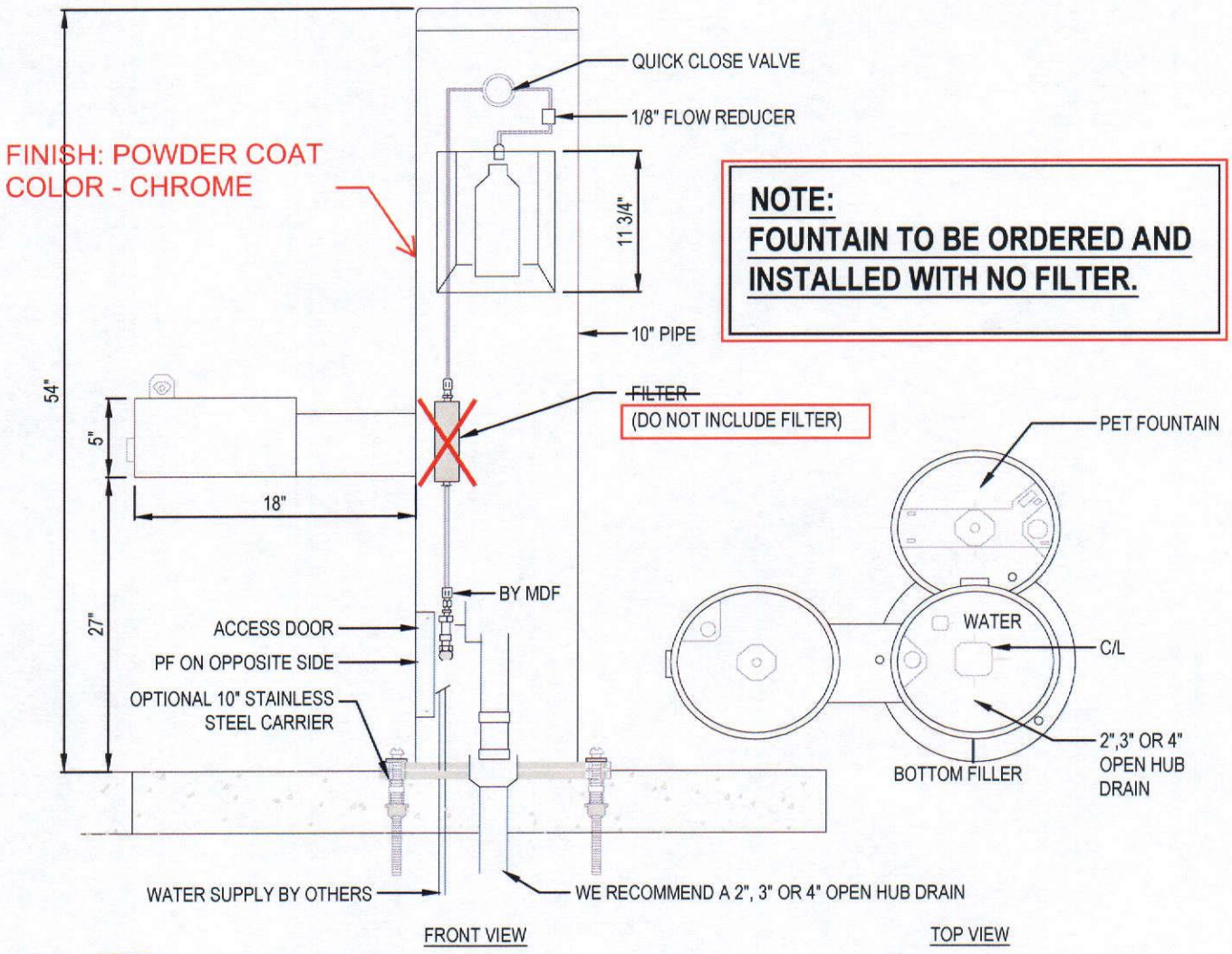

NOTES:

1. OPTIONAL STAINLESS STEEL SURFACE CARRIER RECOMMENDED.
2. INSTALLATION TO BE COMPLETED IN ACCORDANCE WITH MANUFACTURER'S SPECIFICATIONS.
3. DO NOT SCALE DRAWING.
4. THIS DRAWING IS INTENDED FOR USE BY ARCHITECTS, ENGINEERS, CONTRACTORS, CONSULTANTS AND DESIGN PROFESSIONALS FOR PLANNING PURPOSES ONLY. THIS DRAWING MAY NOT BE USED FOR CONSTRUCTION.
5. ALL INFORMATION CONTAINED HEREIN WAS CURRENT AT THE TIME OF DEVELOPMENT BUT MUST BE REVIEWED AND APPROVED BY THE PRODUCT MANUFACTURER TO BE CONSIDERED ACCURATE.
6. CONTRACTOR'S NOTE: FOR PRODUCT AND COMPANY INFORMATION VISIT www.CADdetails.com/info AND ENTER REFERENCE NUMBER 3354-17.7.

MODEL 10155SM

10155SM SHOWN WITH OPTIONAL 10" SS SURFACE CARRIER

3354-17.7

REVISION DATE 12/08/2015

PROTECTED BY COPYRIGHT ©2015 CADDETAILS.COM LTD.

THE INFORMATION CONTAINED IN THIS DRAWING IS THE SOLE PROPERTY OF INTELLICEPT. ANY REPRODUCTION IN PART OR WHOLE WITHOUT THE WRITTEN PERMISSION OF INTELLICEPT IS PROHIBITED.

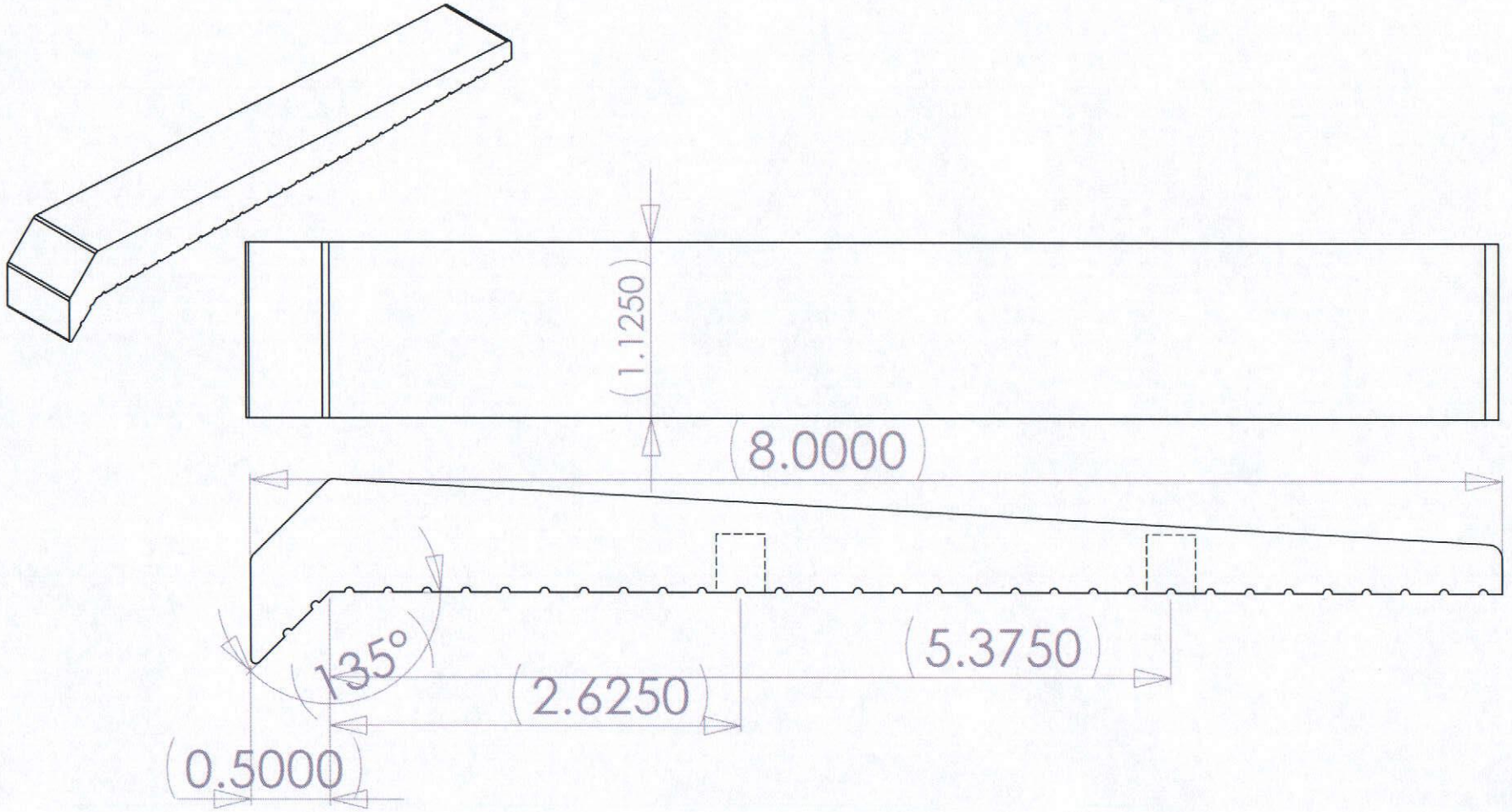

6061 T6 Aluminum. Debur. Type II clear anodize or Hard Anodize. Set with two 3/8" x 1-1/2" studs and epoxy.
Product spaced at 12-18" from end of the wall and 36" +/- 6" centers.

INTELLICEPT
SAN DIEGO, CALIFORNIA, U.S.A.

Gorilla135

SIZE	DWG. NO.	REV.
A		
SCALE	CAD FILE:	SHEET OF

MILLENIUM FINITE™

FNL6 SERIES – INDIVIDUAL MOUNT

PROJECT INFORMATION

Job Name _____

Fixture Type _____

Catalog Number _____

Approved by _____

PRODUCT FEATURES:

» Surface mount – wall; 1', 2', 3', 4', & 6' lengths

» Extruded aluminum housing with die-cast end caps

» Peace of Mind Guarantee® against breakage

FIXTURE HAS A PHOTOCELL OPTION FOR AUTOMATIC ON/OFF ADDS $25

SPECIFICATIONS

HOUSING: Marine grade aluminum. Extruded body with die-cast end caps. Post assembly TGIC polyester powder coat finished – 5-step pre-treatment.

REFLECTOR: Full reflector/wire cover – 92% reflectivity.

LENS: UV-stabilized, high impact clear or pearlescent polycarbonate. Symmetric optic includes diffused, impact-resistant acrylic lens. standard with LED lamp options. Smooth exterior. Nominal thickness. 125" lens securely positioned in body with L brackets, sealed with closed cell gaskets.

SOCKETS: Shock-resistant sockets with internal locking collar to ensure positive lamp retention.

ELECTRICAL: LED: Available 3500K, 4000K and 5000K color temperatures, 82 CRI. 120-277VAC, 50/60Hz electrical input with serviceable high power factor electronic, constant-current driver (<20% THD, >0.95 PF). Standard 0-10V dimming with 10-100% range, maximum driver source of 500 µA. LF: Class P ballasts. Fluorescent electronic 120/277/347 and dual voltage ballasts high power factor. Compatible with Kenall TekLink™ control system.

TEKLINK™ TL50: An independent lighting control system integral to the luminaire, featuring its own occupancy sensor, daylight harvesting and adjustable time-out/dimming settings. Three different programs are available, each governing system behavior in normal operation; On-to-Dim Daylighting, On-to-Off Daylighting, and Occupancy Only.

TEKLINK™ TL100: Centralized, wired zonal occupancy and closed-loop daylight harvesting control system. TL100 controllers are standalone devices and ordered separately for luminaire. Click here for specifications.

TEKLINK™ TL1000/2000: An adaptive lighting control system with wired or wireless communication between system nodes. In addition to occupancy detection and daylight harvesting, TL1000 and TL2000 feature advanced scheduling and energy management capabilities with cloud-based management of system settings, reporting and notifications.

INSTALLATION: 16-guage stainless steel quick mount plate bolts to wall (fasteners by other), fixture attaches to mounting plate with quick mounting hook-and-lock mechanism and locked into place with captive Torx® (or optional Phillips head) screws, which are concealed but accessible from bottom.

PHOTOMETRICS: Photometry tested to the IESNA LM-79-08 standard by an ILAC/ISO17025 accredited laboratory. For additional photometric information, go to www.kenall.com.

WARRANTY: Limited five (5) year warranty. Standard four-point mounting to wall (required for Peace of Mind Guarantee®).

LISTINGS: Luminaire is certified to UL Standards by Intertek Testing Laboratory for wet location. ETL certified IP64 per IEC 60598. IESNA-designated full cut-off. IDA-Approved™ Dark-Sky Friendly Fixture.

LED | PEACE OF MIND Guarantee® | ETL | IP64 | IDA

color to match pavilion color

ORDERING INFORMATION (Ex: FNL6-48-DB-SYM-1-45L40K-DCC-DV)

Model	Length	Finish	Lens	Qty - Lamp Type	Ballast/Driver	Ballast Qty	Voltage	Options	Accessories	TekLink	Controls System
FNL6	2'	Tan	PP	2' LED 3500k							< >

Length
- **12** 1'
- **24** 2'
- **36** 3'
- **48** 4'
- **48T*** 4' Tandem (Two 2' Lamps)
- **72T*** 6' Tandem (Two 3' Lamps)

Finish
- **DB** Dark Bronze
- **MB** Matte Black
- **MW** Matte White
- **CC** Custom Color (Consult Factory)

Lens
- **CP** Clear Polycarbonate (n/a w/LED)
- **PP** Pearlescent Polycarbonate
- **SYM‡** Symmetric, Diffused DR Acrylic

Quantity - Lamp Type (Quantity, Driver, Voltage, Temp)

1' Length
- **1-12L35K** 12 Watt 3500K LED
- **1-12L40K** 12 Watt 4000K LED
- **1-12L50K** 12 Watt 5000K LED

2' Lengths (Cross Section)
- **1-25L35K** 25 Watt 3500K LED
- **1-25L40K** 25 Watt 4000K LED
- **1-25L50K** 25 Watt 5000K LED
- **1-14** F14T5
- **1-17** F17T8
- **2-17** F17T8
- **1-24** F24T5HO

3' Lengths (Cross Section)
- **1-33L35K** 33 Watt 3500K LED
- **1-33L40K** 33 Watt 4000K LED
- **1-33L50K** 33 Watt 5000K LED
- **1-21** F21T5
- **1-25** F25T8
- **2-25** F25T8
- **1-39** F39T5HO

4' Lengths (Cross Section)
- **1-45L35K** 45 Watt 3500K LED
- **1-45L40K** 45 Watt 4000K LED
- **1-45L50K** 45 Watt 5000K LED
- **1-14*** F14T5 (two 2' lamps in tandem)
- **1-17*** F17T8 (two 2' lamps in tandem)
- **1-24*** F24T5HO (two 2' lamps in tandem)
- **1-28** F28T5
- **1-32** F32T8
- **2-32** F32T8
- **1-54** F54T5HO

6' Lengths (Cross Section)
- **1-67L35K** 67 Watt 3500K LED
- **1-67L40K** 67 Watt 4000K LED
- **1-67L50K** 67 Watt 5000K LED
- **1-21*** F21T5 (two 3' lamps in tandem)
- **1-25*** F25T8 (two 3' lamps in tandem)
- **2-25*** F25T8 (four 3' lamps in tandem)
- **1-39*** F39T5HO (two 3' lamps in tandem)

Ballast/Driver Type
- **DCC** Dimming Constant Current Driver (LED only)
- **IS** Instant Start Electronic <10% THD (T8)
- **RS** Rapid Start Electronic <10% THD (T8,T5,T5HO)
- **SB** Specified Ballast

Ballast Quantity (n/a with LED)
- **1** One
- **2** Two (2 lamps only)

Voltage
- **120** 120 Volts
- **277** 277 Volts
- **347●◆** 347 Volts (T8, T5HO) (n/a with LED)
- **DV◆** 120-277 Volts

Options
- **EL▼^** 500 Minimum Lumen Battery Pack – (4' LF only)
- **LEL▼** LED Emergency Battery Backup (3' or 4' LED only)
- **BPC** Button Photocell (120 or 277V only)
- **FS** Single Fuse & Holder
- **PH** Phillips Head Fasteners

Accessories
- **9500** Torx® Screwdriver
- **D-0552** Torx® Driver Bit

TekLink
- **TL50†** TL50 Control System (Click here for specifications)
- **TL1000†** TL1000 Wired Control System (Click here for specifications)
- **TL2000†** TL2000 Wireless Control System (Click here for specifications)
- **TLOS▲†** TL Sensor Only (Click here for specifications)

Please consult Kenall Applications when ordering Controls

Controls Kit
- **< >** Internal Code

* Tandem only
● 347V n/a with EL option
▼ Note: EL option adds 12" to fixture length, LEL option adds 13.66" to 3', 13.78" to 4' lengths.
^ n/a with 2 lamp T5HO, unless 2 lamps are in tandem
▲ Used in conjunction with TL100
◆ n/a with BPC
† LED Lamp Type only
‡ Peace of Mind Guarantee not included

KENALL

www.kenall.com P: 800-4-Kenall F: 262-891-9701 10200 55th Street Kenosha, Wisconsin 53144

When you see this image, you will know the Kenall product shown or described is designed and manufactured in the USA with components purchased from US suppliers, and meets the Buy American requirements under the ARRA. Kenall has not determined the origin of its domestically purchased components or the subcomponents thereof. May be covered by patents found at www.kenall.com/patents. Content of specification sheets is subject to change; please consult www.kenall.com for current product details. © 2015 Kenall Mfg. Co. All rights reserved.

MILLENIUM FINITE™

FNL6 SERIES – Technical Data

PERFORMANCE

Length	Lamp Type	Initial Delivered Lumens @ 25°C (lm)	Efficacy (lm/W)	Input Power (W)	Drive Current (mA)	Estd. L_{70} LED Life (Hrs)
12	12L35K	1154	82	14	94	80,000
	12L40K	1230	88	14	94	80,000
	12L50K	1279	91	14	94	80,000
24	25L35K	2326	86	27	94	80,000
	25L40K	2480	92	27	94	80,000
	25L50K	2579	96	27	94	80,000
36	33L35K	3100	86	36	94	80,000
	33L40K	3305	92	36	94	80,000
	33L50K	3437	95	36	94	80,000
48	45L35K	4138	84	49	94	80,000
	45L40K	4412	90	49	94	80,000
	45L50K	4588	94	49	94	80,000
72	67L35K	6200	86	72	94	80,000
	67L40K	6610	92	72	94	80,000
	67L50K	6874	95	72	94	80,000

Displayed information above is for PP Lens type only. Info subject to change. Visit www.kenall.com for IES files and additional information.

Model: FNL6-12-MW-SYM-12L40K-DCC-DV

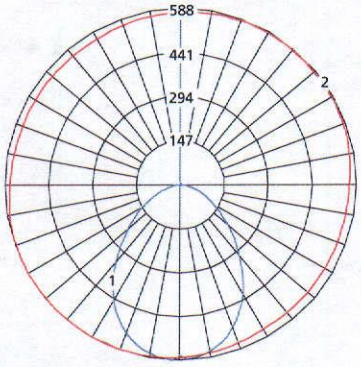

Maximum Candela = 588 Located At Horizontal Angle = 240, Vertical Angle = 2.5

1 - Vertical Plane Through Horizontal Angles (240-60) (Through Max. Cd.)
2 - Horizontal Cone Through Vertical Angle (2.5) (Through Max. Cd.)

Model: FNL6-24-MW-SYM-25L40K-DCC-DV

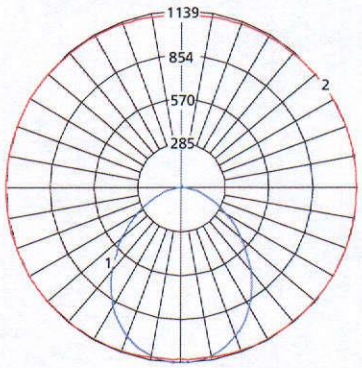

Maximum Candela = 1139 Located At Horizontal Angle = 30, Vertical Angle = 2.5

1 - Vertical Plane Through Horizontal Angles (30-210) (Through Max. Cd.)
2 - Horizontal Cone Through Vertical Angle (2.5) (Through Max. Cd.)

Model: FNL6-36-MW-SYM-33L40K-DCC-DV

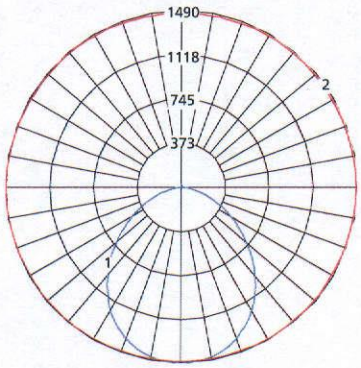

Maximum Candela = 1490 Located At Horizontal Angle = 0, Vertical Angle = 2.5

1 - Vertical Plane Through Horizontal Angles (0-180) (Through Max. Cd.)
2 - Horizontal Cone Through Vertical Angle (2.5) (Through Max. Cd.)

Model: FNL6-48-MW-SYM-45L40K-DCC-DV

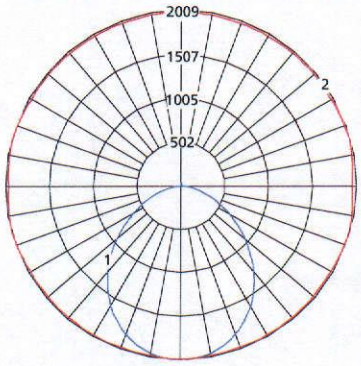

Maximum Candela = 2009 Located At Horizontal Angle = 15, Vertical Angle = 2.5

1 - Vertical Plane Through Horizontal Angles (15-195) (Through Max. Cd.)
2 - Horizontal Cone Through Vertical Angle (2.5) (Through Max. Cd.)

Model: FNL6-72-MW-SYM-67L40K-DCC-DV

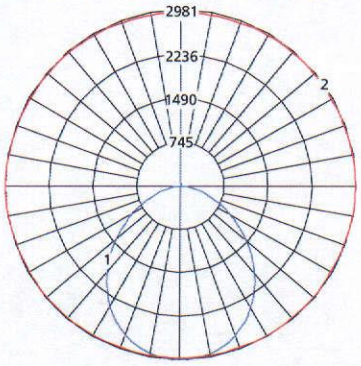

Maximum Candela = 2981 Located At Horizontal Angle = 0, Vertical Angle = 2.5

1 - Vertical Plane Through Horizontal Angles (0-180) (Through Max. Cd.)
2 - Horizontal Cone Through Vertical Angle (2.5) (Through Max. Cd.)

www.kenall.com P: 800-4-Kenall F: 262-891-9701 10200 55th Street Kenosha, Wisconsin 53144

When you see this image, you will know the Kenall product shown or described is designed and manufactured in the USA with components purchased from US suppliers, and meets the Buy American requirements under the ARRA. Kenall has not determined the origin of its domestically purchased components or the subcomponents thereof. May be covered by patents found at www.kenall.com/patents. Content of specification sheets is subject to change; please consult www.kenall.com for current product details. © 2015 Kenall Mfg. Co. All rights reserved.

MILLENIUM FINITE™

FNL6 SERIES – Technical Data

DIMENSIONAL DATA

CROSS SECTION/DETAILS

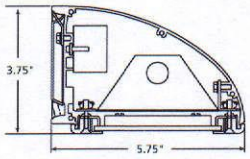

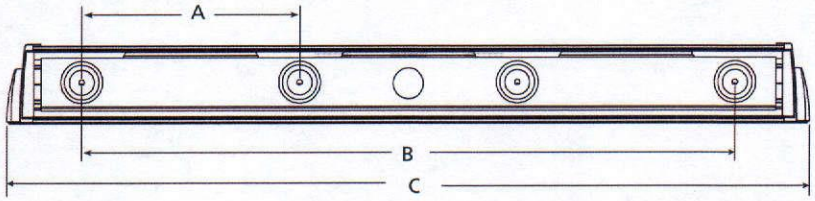

Nominal Fixture Legend

LMP	A	B	C
1' LED	n/a	8.00	14.18
2' T5	n/a	17.25	23.37
2' T8/LED	n/a	19.50	24.87
3' T5/LED	9.50	28.50	35.21
3' T8	10.00	30.00	36.87
4' T5/LED	13.50	40.50	47.00
4' T8	14.00	42.00	48.87
6' T5/LED	20.00	60.00	70.00
6' T8	21.00	63.00	72.87

▼LMP w/EL Opt.	A	B	C
3' LED	14.00	42.00	48.87
4' LED/T8	17.00	51.00	60.87

www.kenall.com P: 800-4-Kenall F: 262-891-9701 10200 55th Street Kenosha, Wisconsin 53144

When you see this image, you will know the Kenall product shown or described is designed and manufactured in the USA with components purchased from US suppliers, and meets the Buy American requirements under the ARRA. Kenall has not determined the origin of its domestically purchased components or the subcomponents thereof. May be covered by patents found at www.kenall.com/patents. Content of specification sheets is subject to change; please consult www.kenall.com for current product details. © 2015 Kenall Mfg. Co. All rights reserved.

CENTERVILLE
CITY COUNCIL
Staff Backup Report
4/19/2016

Item No. 6.

Short Title: Municipal Code Amendments - Title 14 - Traffic Code

Initiated By: City Attorney

Scheduled Time: 8:10

SUBJECT

****Tabled from April 5, 2016**** Consider Ordinance No. 2016-10 amending various provisions of Title 14 of the Centerville Municipal Code regarding the Traffic Code

RECOMMENDATION

Approve Ordinance No. 2016-10 amending various provisions of Title 14 of the Centerville Municipal Code regarding the Traffic Code.

BACKGROUND

This matter was tabled from the April 5, 2016 Council meeting. As part of the City Council's approval and direction to Staff to transition the Centerville Municipal Code to an online electronic code, the City Attorney has reviewed and recommends various amendments to Title 14 regarding the Traffic Code. The suggested amendments to Title 14 have been reviewed with the Police Chief and Staff recommend adoption of Ordinance No. 2016-10.

ATTACHMENTS:

Description

- Ordinance No. 2016-10-Title 14
- Title 14-Traffic Code-Redline

ORDINANCE NO. 2016-10

AN ORDINANCE UPDATING AND AMENDING TITLE 14 OF THE CENTERVILLE MUNICIPAL CODE REGARDING THE CENTERVILLE CITY TRAFFIC CODE

WHEREAS, the City is in the process of transitioning the Centerville Municipal Code to an online electronic code and the City Council desires to bring existing titles, chapters and provisions of the Centerville Municipal Code up to date to be consistent with State statutory provisions, and to make other formatting, numbering and editing changes as recommended by Staff; and

WHEREAS, Staff has evaluated, reviewed and prepared suggested revisions and updates to Title 14 of the Centerville Municipal Code regarding the Traffic Code and recommends updating and amending Title 14 as more particularly set forth herein; and

WHEREAS, the City Council has reviewed the recommended changes and updates of Title 14 of the Centerville Municipal Code and desires to adopt the recommended revisions and updates as more particularly set forth herein; and

WHEREAS, the City Council finds that the proposed amendments to the Centerville City Traffic Code as more particularly set forth herein are in the best interest of the public health, safety and welfare.

NOW, THEREFORE, BE IT ORDAINED BY THE CITY COUNCIL OF CENTERVILLE CITY, STATE OF UTAH, AS FOLLOWS:

Section 1. **Amendment**. Title 14 of the Centerville Municipal Code regarding the Centerville City Traffic Code is hereby amended to read in its entirety as set forth in **Exhibit A,** attached hereto and incorporated herein by this reference.

Section 2. **General Repealer.** The amendment and recodification of Title 14 of the Centerville Municipal Code shall be a repeal of all ordinances in conflict with the adopted and codified Ordinances, provided however, all ordinances in force prior to the adoption and codification shall continue in force after the adoption and codification for the purpose of all rights acquired, fines, penalties, forfeitures and liabilities incurred and actions therefor.

Section 3. **Severability.** If any section, part or provision of this Ordinance is held invalid or unenforceable, such invalidity or unenforceability shall not affect any other portion of this Ordinance, and all sections, parts and provisions of this Ordinance shall be severable.

Section 4. **Effective Date.** This Ordinance shall become effective immediately upon publication or posting, or thirty (30) days after passage, which occurs first.

PASSED AND ADOPTED BY THE CITY COUNCIL OF CENTERVILLE CITY, STATE OF UTAH, THIS 5th DAY OF APRIL, 2016.

ATTEST: **CENTERVILLE CITY**

_____ By:_____
Marsha L. Morrow, City Recorder Mayor Paul A. Cutler

Voting by the City Council:

	"AYE"	"NAY"
Councilmember Fillmore	_____	_____
Councilmember Ince	_____	_____
Councilmember Ivie	_____	_____
Councilmember McEwan	_____	_____
Councilmember Mecham	_____	_____

CERTIFICATE OF PASSAGE AND PUBLICATION OR POSTING

According to the provisions of the U.C.A. § 10-3-713, as amended, I, the municipal recorder of Centerville City, hereby certify that foregoing ordinance was duly passed by the City Council and published, or posted at: (1) 250 North Main; (2) 655 North 1250 West; and (3) RB's Gas Station, on the foregoing referenced dates.

_____ DATE: _____
MARSHA L. MORROW, City Recorder

RECORDED this ____ day of _____, 2016.

PUBLISHED OR POSTED this ____ of _____, 2016.

EXHIBIT A

Title 14
Traffic Code

TITLE 14

TRAFFIC CODE

CHAPTER 14-01: GENERAL PROVISIONS
CHAPTER 14-02: ADOPTION OF STATE CODES
CHAPTER 14-03: TRAFFIC CONTROL DEVICES ~~SIGNS, SIGNALS AND MARKINGS~~
CHAPTER 14-04: ACCIDENTS
CHAPTER 14-05: SPEED RESTRICTIONS
CHAPTER 14-06: STOPPING, STANDING AND PARKING
CHAPTER 14-07: MISCELLANEOUS RULES
CHAPTER 14-08: TRUCK ROUTES

CHAPTER 14-01: GENERAL PROVISIONS

14-01-010. ~~Short~~ Title.
14-01-020. Rules of Construction.
14-01-030. Police Chief to Administer.
14-01-040. Applicability Generally.
14-01-050. Applicability to School Property.
14-01-060. Penalties.
14-01-070. Fines/Bail Schedule.

14-01-010. ~~Short~~ Title.

This Title shall be known and may be cited as the "Centerville City Traffic Code."

14-01-020. Rules of Construction.

The provisions of this Title and the *Utah Code Annotated* provisions adopted herein shall be construed in a manner to ensure enforcement consistent and in accordance with the traffic laws of the State of Utah. Pursuant to *Utah Code Ann.* § 41-6a-207, as amended, the City is prohibited from enacting or enforcing any rule or ordinance in conflict with the provisions of Title 41, Chapter 6a, but may adopt ordinances consistent with Title 41, Chapter 6a, and additional traffic ordinances not in conflict with such Chapter.

14-01-030. Police Chief to Administer.

The Centerville City Chief of Police is ~~hereby~~ vested with the powers necessary to administer the provisions of the Centerville City Traffic Code and all laws relating to the operation of vehicles on the highways within the jurisdiction of the City.

14-01-040. Applicability Generally.

Pursuant to the authority vested in municipalities under *Utah Code Ann.* § 10-8-30, as amended, and to the extent permitted by law, the Centerville City Traffic Code shall be applicable to all pedestrian and vehicular traffic and parking on any public roads, streets and highways within the jurisdiction of Centerville City; provided the operator of an authorized emergency vehicle and persons operating equipment while actually engaged in work on the surface of a highway may exercise the privileges granted under *Utah Code Ann.* § 41-6a-212, as amended. The provisions of this Traffic Code shall be enforceable by any law enforcement officer having jurisdiction over such roads, streets and highways.

14-01-050. Applicability to School Property.

Pursuant to *Utah Code Ann.* § 53A-3-504, as amended, and to the extent requested by the responsible board of education, the Centerville City Traffic Code is hereby made applicable to vehicular traffic and parking on all public school property within Centerville City. All law enforcement officers having jurisdiction within Centerville City are hereby vested with the authority to interpret and enforce the Traffic Code of Centerville City to vehicular traffic and parking on all public school property within Centerville City. The Traffic Code shall be interpreted, construed and applied insofar as practicable to traffic and parking situations arising upon school property to the same extent as though such school property were a public street, road, or highway, and for the purposes of this Chapter, such school property is declared to be and shall be considered a public street, road, or highway.

14-01-060. Penalties.

Unless otherwise provided herein or in the State Codes adopted herein by reference, any violation of this Title shall be a Class C misdemeanor. Pursuant to *Utah Code Ann.* § 41-6a-202, unless otherwise provided, a violation of the provisions of Parts 2 (Obedience to Traffic Laws), 11 (Bicycles), 17 (Miscellaneous Rules), and 18 (Seatbelts) of the Utah Traffic Code, as adopted herein by reference, shall be an infraction. This Section shall not limit the authority of any other relief as may be appropriate and lawful under the laws of the State of Utah.

14-01-070. Fines/Bail Schedule.

Fines and bail for violations of this Title and ~~for~~ all criminal and traffic offenses set forth herein may be assessed ~~shall be set and imposed~~ in accordance with the Uniform Fine/Bail Schedule as adopted and amended by the Utah Judicial Council and the Centerville City Fine/Bail Schedule for Local Ordinances as adopted and amended by the Centerville City Council. This Section does not limit the applicable court from, in its discretion, imposing no fine, or a fine in any amount up to and including the maximum fine, for the offense.

CHAPTER 14-02: ADOPTION OF STATE CODES

14-02-010. Adoption of State Motor Vehicle and Traffic Codes.
14-02-020. Adoption of State Transportation Code.
14-02-030. Adoption of State Uniform Driver License Act.

14-02-010. Adoption of State Motor Vehicle and Traffic Codes.

The following Chapters of Title 41 of the *Utah Code Annotated*, as amended, known as the "Motor Vehicles Code," are hereby adopted by this reference as if fully set forth herein, provided however, that those provisions which are exclusive to the State of Utah or which are not enforceable by Centerville City under the laws of the State of Utah, are excluded:

Chapter 1a (Motor Vehicle Act)
Chapter 6a (Traffic Code)
Chapter 8 (Driving by Minors)
Chapter 12a (~~Motor Vehicle~~ Financial Responsibility of Motor Vehicle Owners and Operators Act)
Chapter 21 (Vintage Vehicles)
Chapter 22 (Off-Highway Vehicles)

14-02-020. Adoption of State Transportation Code.

Title 72 of the *Utah Code Annotated*, as amended, known as the "Transportation Code," is hereby adopted by this reference as if fully set forth herein, provided however, that those provisions which are exclusive to the State of Utah or which are not enforceable by Centerville City under the laws of the State of Utah, are excluded.

14-02-030. Adoption of State Uniform Driver License Act.

Title 53, Chapter 3, of the *Utah Code Annotated*, as amended, known as the "Uniform Driver License Act," is hereby adopted by this reference as if fully set forth herein, provided however, that those provisions which are exclusive to the State of Utah or which are not enforceable by Centerville City under the laws of the State of Utah, are excluded.

CHAPTER 14-03: TRAFFIC-CONTROL DEVICES ~~SIGNS, SIGNALS AND MARKINGS~~

14-03-010. Traffic-Control Devices ~~Signs, Signals and Markings~~.
14-03-020. Failure to Obey.

14-03-010. Traffic-Control Devices ~~Signs, Signals and Markings~~.

The City shall place and maintain official traffic-control devices ~~signs, signals and markings~~ upon highways under its jurisdiction as necessary to regulate, warn, and guide traffic and parking within Centerville City and to carry out the provisions of this Title. All traffic-control devices ~~signs and signals~~ erected under this Section shall conform to and be maintained in conformance with the standards and specifications adopted by the Department of Transportation pursuant to *Utah Code Ann.* § 41-6a-301, as amended.

14-03-020. Failure to Obey.

It shall be unlawful for any person to fail to obey any lawfully erected traffic-control device ~~sign, signal or curb marking~~ provided herein, unless otherwise directed to do so by a police officer or other law enforcement or public safety official.

CHAPTER 14-04: ACCIDENTS

14-04-010. Accident Responsibilities.
14-04-020. Written Report Required.

14-04-010. Accident Responsibilities.

The operator of a vehicle involved in an accident that occurs within Centerville City shall comply with the accident responsibilities and reporting requirements set forth in *Utah Code Ann.* §§ 41-6a-401, *et seq.*, regarding accident responsibilities.

14-02-020. Written Report Required.

Pursuant to authority granted to the City under *Utah Code Ann.* § 41-6a-402, as amended, the operator or owner of a vehicle involved in any accident occurring within Centerville City shall fill out the required accident forms provided by Centerville City and shall provide additional information regarding the accident upon the request of the Police Department or any investigating officer.

CHAPTER 14-05: SPEED RESTRICTIONS

14-05-010. Prima Facie Speed Limit.
14-05-020. Posted Limits.
14-05-030. Safe and Appropriate Speed.

14-05-010. Prima Facie Speed Limit.

Except as otherwise provided in Section 14-05-030 or applicable State law, t~~T~~he prima facie speed for all highways under the jurisdiction of Centerville City shall be as follows:

(a) 20 ~~Twenty (20)~~ miles per hour in ~~when passing through~~ a reduced speed school zone as defined in *Utah Code Ann.* § 41-6a-303, as amended;

(b) 25 ~~Twenty-five (25)~~ miles per hour in ~~when passing through~~ a residential district; and

(c) 30 ~~Thirty (30)~~ miles per hour in ~~when passing through~~ a business district.

14-05-020. Posted Limits.

The City may ~~shall~~ declare and post alternative speed limits for highways under the jurisdiction of Centerville City when it is determined after an engineering and traffic study that the reasonable and safe speed limit may be as posted. Any speed limit altered under this Section must be established in accordance with the provisions of *Utah Code Ann.* § 41-6a-603, as amended, and shall be ~~is~~ effective when appropriate signs giving notice are erected upon the affected highway.

14-05-030. Safe and Appropriate Speed.

Pursuant to *Utah Code Ann.* § 41-6a-601, as amended, a person may not operate a vehicle at a speed greater than is reasonable and prudent under the existing conditions, giving regard to the actual and potential hazards then existing, including when approaching and crossing an intersection or railroad grade crossing, approaching and going around a curve, approaching a hill crest, traveling upon any narrow or winding roadway, and approaching other hazards that exist due to pedestrians, other traffic, weather, or highway conditions.

CHAPTER 14-06: STOPPING, STANDING AND PARKING

14-06-010. All-Night Parking.
14-06-020. Authorization for All-Night Parking.
14-06-030. Parking for Certain Purposes.
14-06-040. Storing and Parking Restrictions.
14-06-050. Explosive Materials.
14-06-060. Hazardous Parking.
14-06-070. Parking in Narrow Roadway.
14-06-080. Owner's Responsibility for Parking Violation.
14-06-090. Parking Unregistered Vehicles.

14-06-010. All-Night Parking.

No person shall park a vehicle on any street within the jurisdiction of Centerville City during the period from December 1st ~~November 15th~~ through March 31st~~April 15th~~, between the hours of 12:00 midnight ~~1:00 a.m.~~ and 6:00 a.m. for more than one ~~(1)~~ hour, except physicians during emergency calls, emergency vehicles or law enforcement vehicles exempted under Section 14-01-040, or other authorized vehicles in accordance with Section 14-06-020.

14-06-020. Authorization for All-Night Parking.

Any resident of Centerville City may apply to the City for authorization for all-night parking when the same is required by emergency or other unusual circumstances. The Chief of Police, upon good cause showing, may authorize such all-night parking for a period not to exceed 24 ~~twenty-four (24)~~ hours. The Chief of Police shall be the sole judge as to the necessity and requirement for the authorized all-night parking.

14-06-030. Parking for Certain Purposes.

No person shall park a vehicle upon any highway within the jurisdiction of Centerville City for the principal purpose of:

~~(a) Displaying such vehicle for sale;~~

~~(b) Displaying any advertising.~~

(a~~c~~) Greasing or repairing such vehicle other than repairs necessitated by an emergency; or

(b~~d~~) Displaying for sale or selling any foodstuffs or merchandise.

14-06-040. Storing and Parking Restrictions.

(a) Except as otherwise provided herein, no person shall park a motor vehicle or similar conveyance upon any highway within the jurisdiction of Centerville City for more than a continuous 48 ~~forty-eight (48)~~ hour period.

(b) Except as otherwise provided herein, no person shall park a hauling trailer, boat, bus, camping vehicle, truck with gross weight in excess of 10,000 ~~ten thousand (10,000)~~ pounds, or any other similar conveyance upon any highway within the jurisdiction of Centerville City for more than a continuous 24 ~~twenty-four (24)~~ hour period.

(c) Except as otherwise provided herein, no person shall park any vehicle having a total gross weight, loaded or unloaded, in excess of 18,000 ~~eighteen thousand (18,000)~~ pounds, or having a total length in excess of 40 ~~forty (40)~~ feet, within any residential zone or along any collector or arterial street within the jurisdiction of the City as designated on the City General Plan or Zoning Map, except while actually loading or unloading cargo on or in said vehicle.

(d) In determining the total gross weight or total length set forth herein, the length shall be measured from the most forward point of the vehicle or its load, and the length or weight of a trailer connected or attached to or in tandem with the motor vehicle shall be included. Restricted vehicles, as more particularly defined in Section 14-08-020, shall also be subject to the Truck Route provisions set forth in Chapter 14-08.

14-06-050. Explosive Materials.

No person shall park any vehicle carrying more than 100 ~~one hundred (100)~~ gallons of flammable liquid or more than 5 ~~five (5)~~ pounds of dynamite or other explosive of comparable blasting power, or more than 50 ~~fifty (50)~~ gallons or 50 ~~fifty (50)~~ pounds of highly corrosive freight, within a residential zone or along a collector street within the jurisdiction of the City as designated on the City General Plan or Zoning Map, except while actually loading or unloading cargo on or in said vehicle.

14-06-060. Hazardous Parking.

No persons shall stop, stand or park a vehicle at any hazardous or congested place within the jurisdiction of Centerville City as properly designated by the City with official signs or markings. In no event shall any person stop or park a vehicle in such a manner as to interfere with the free flow of traffic along the street upon which it is parked.

14-06-070. Parking in Narrow Roadway.

No person shall park a vehicle in an alley or roadway within the jurisdiction of Centerville City in such a manner as to leave less than 20 ~~twenty (20)~~ feet of the width of the roadway available for the free movement of vehicular traffic, or to block the driveway entrance of any abutting property.

14-06-080. Owner's Responsibility for Parking Violation.

Whenever any vehicle shall have been parked in violation of any ordinance prohibiting or restricting parking, the person in whose name such vehicle is registered shall be prima facie responsible for such violation and subject to the penalty therefor.

14-06-090. Parking Unregistered Vehicles.

It is unlawful to park, or for an owner to knowingly permit to be parked, upon any street or upon public property, a vehicle which is not currently registered in accordance with State law.

CHAPTER 14-07: MISCELLANEOUS RULES

14-07-010. Driving within Bicycle Lanes.
14-07-020. Driving over "Wet" Traffic Markings.
14-07-030. Driving on New Pavement.
14-07-040. Avoiding Intersection or Highway.
14-07-050. Duty to Keep Proper Lookout.
14-07-060. Interference with Control.
14-07-070. Seating.
14-07-080. Standing on Seat.
14-07-090. Hanging on Outside of Moving Vehicle.
14-07-100. Attaching Sled or Other Conveyance.
14-07-110. Tampering with Vehicle.
14-07-120. Excessive Acceleration.
14-07-130. Safe Operation.
14-07-140. Negligent Collision.
14-07-150. Driving while Impaired.
14-07-160. Funeral Processions.
14-07-170. Parades and Processions.
14-07-180. Discharge of Debris.
14-07-190. Securing Loads.
14-07-200. Obstruction of Traffic.
14-07-210. Rollerskating and Skateboard Restrictions.
14-07-220. Livestock on Streets.
14-07-230. Trail Regulations.

14-07-010. Driving within Bicycle Lanes.

It shall be unlawful for the driver of any vehicle to use a marked bicycle lane as a turning lane, or to drive within, through, park or stop within a marked bicycle lane except to briefly cross said lane to turn into an intersection, street, alley, driveway or other parking area. Any vehicle so turning must yield the right-of-way to all bicycles within the lane which are close enough to constitute an immediate hazard.

14-07-020. Driving over "Wet" Traffic Markings.

It shall be unlawful for any person to drive ~~or ride~~ any vehicle ~~or animal~~ over, on or across any painted traffic markings which are indicated as being "Wet."

14-07-030. Driving on New Pavement.

No person shall drive ~~or ride~~ any vehicle ~~or animal~~ over or across any newly made pavement in any public street when there is a person, sign, or barrier warning persons not to drive ~~or ride~~ over or across such pavement or that the street is closed.

14-07-040. Avoiding Intersection or Highway.

It shall be unlawful for the driver of any vehicle to avoid designated intersections or highways, or the traffic regulations set forth herein, by cutting through any service station lot, parking lot, or other public or private lot.

14-07-050. Duty to Keep Proper Lookout.

It shall be unlawful for any person to drive any vehicle without keeping a reasonable and proper lookout for other traffic, objects, and persons.

14-07-060. Interference with Control.

It shall be unlawful for any person to engage in any activity that interferes with the safe control and operation of any vehicle while the vehicle ~~same~~ is in motion.

14-07-070. Seating.

It shall be unlawful for the driver of any vehicle to have in his or her lap any other person, adult or child, or animal, or for the driver to be seated in the lap of any other person while the vehicle is in motion.

14-07-080. Standing on Seat.

It shall be unlawful for any person to operate any vehicle while any person, adult or child, is standing on a seat within the ~~such~~ vehicle.

14-07-090. Hanging on Outside of Moving Vehicle.

It shall be unlawful for any person to climb, swing, or otherwise hold onto the outside of any moving vehicle.

14-07-100. Attaching Sled or Other Conveyance.

It shall be unlawful for any person to knowingly drive or operate a vehicle upon any street within the jurisdiction of Centerville City while any person riding a bicycle, moped, coaster, skateboard, roller skates, sled, or similar conveyance is attached or connected to the ~~such~~ vehicle.

14-07-110. Tampering with Vehicle.

It shall be unlawful for any person to damage, tamper, or interfere with another person's vehicle without the authority of the owner or the person lawfully in charge of the vehicle. Such acts include but are not limited to climbing upon or into the vehicle, sounding the horn or any other signaling device, manipulating any of the levers, starter, brakes or machinery thereof, or setting the vehicle in motion.

14-07-120. Excessive Acceleration.

It shall be unlawful for any person to race the motor of any vehicle unnecessarily in such a manner that the vehicle is so rapidly accelerated that the vehicle emits a loud noise unusual to its operation or whereby the tires of such vehicle squeal or leave tire marks on the pavement or other surface.

14-07-130. Safe Operation.

No person shall drive a vehicle in such a manner as to endanger life or property by failing to keep his or her vehicle under safe and proper control.

14-07-140. Negligent Collision.

It shall be unlawful for any person to operate a vehicle with such lack of due care and in such negligent manner as to cause the same to collide with any vehicle, person or object.

14-07-150. Driving while Impaired.

It shall be unlawful for any person to operate a vehicle while his or her ability or alertness is so impaired through fatigue, illness or any other cause as to make it unsafe for him or her to drive such vehicle. This Section shall not be interpreted to include circumstances amounting to driving under the influence or reckless driving pursuant to *Utah Code Ann.* §§ 41-6a-501, *et seq.*, as amended, regarding driving under the influence and reckless driving.

14-07-160. Funeral Processions.

All persons driving a motor vehicle in a funeral procession shall comply with and observe the tTraffic rRules and rRegulations set forth in this Title, herein. unless otherwise authorized by permit obtained from the Chief of Police City in accordance with Section 14-07-170.

14-07-170. Parades and Processions.

(a) Permit Required. Any persons desiring to engage in a procession or parade shall obtain a permit from the Chief of Police before occupying, marching, or proceeding along any street within the jurisdiction of Centerville City.

(b) Permit Request. All requests for permits shall be made in writing at least ten (10) days prior to the actual time of the procession or parade and shall state the time, place of formation, proposed line of march, destination and such other information as the Chief of Police City may require.

(c) Time, Place and Manner. The Chief of Police City may alter the time, place and manner of the parade or procession as it deems necessary to promote the health, safety, welfare and convenience of the public.

(d) Supervision. The person or persons obtaining a permit, together with the sponsoring organizations, shall provide at their own expense, police supervision for such parades or processions which are not of a community-wide nature when the Chief of Police determines that such supervision is necessary to promote the health, safety and welfare of the public.

(e) Appeal. Any final determination by the Chief of Police made hereunder may be appealed in writing within 10 ten (10) days from the date of the determination to the City Manager or the City Council.

14-07-180. Discharge of Debris.

It shall be unlawful for any person to operate or load, or cause to be operated or loaded, a vehicle upon any public highway within the jurisdiction of Centerville City from which any kind of sand, gravel, rocks, materials, or debris fall, discharge, or otherwise escape therefrom. This Section shall not apply to official street maintenance crews or to other persons who have obtained a proper permit from the Chief of Police.

14-07-190. Securing Loads.

It shall be unlawful for any person to operate or load, or cause to be operated or loaded, any vehicle upon any public highway within the jurisdiction of Centerville City in which the contact points of the material being hauled are less than 6 six (6) inches from the top of the bed, unless the vehicle is sufficiently covered or tied down so as to prevent such materials from littering, spilling or otherwise escaping therefrom. This Section shall not apply to official street maintenance crews or to other persons who have obtained a proper permit from the Chief of Police.

14-07-200. Obstruction of Traffic.

It shall be unlawful for any person to remain standing, lying or sitting on any street or highway within the City or to otherwise obstruct or prevent the free passage and use of vehicular or pedestrian traffic on the streets, sidewalks and crosswalks within the City. In accordance with this provision, it shall be unlawful for any person to erect or place a basketball standard or other recreational item in the street or within a park strip or public right-of-way such that the street is used as a playing area or field. Such use of the street is declared to be unsafe and dangerous to the public health and safety.

14-07-210. Rollerskating and Skateboard Restrictions.

It shall be unlawful for any person upon rollerskates, rollerblades, skateboards, or riding in or by means of any coaster, sled, toy-wagon, scooter, or similar device, to obstruct or restrict vehicular traffic upon any roadway within Centerville City or to otherwise use such devices in a dangerous or unsafe manner.

14-07-220. Livestock on Streets.

It shall be unlawful for any person to drive livestock upon any streets within the jurisdiction of Centerville City not designated for such purpose, except as otherwise provided by permit obtained from the Chief of Police.

14-07-230. Trail Regulations.

(a) Trails. Centerville City has a number of designated and publicly dedicated motorized and non-motorized trails within the City and in the foothills, including, but not limited to, the Bonneville Shoreline Trail, as designated on the Centerville City Trail System Map, hereinafter referred to as "Trails" or "Trail System."

(b) Motorized Vehicles. It shall be unlawful for any person to drive any motorized vehicle on a Trail within the Trail System designated and marked as a non-motorized Trail or to otherwise deviate from or to go off a Trail designated for motorized vehicle use. This Subsection shall not apply to emergency or law enforcement vehicles and personnel in the lawful pursuit of their duties.

(c) Signs. It shall be unlawful for any person to remove, cover, deface, or harm in any way, signs regulating or guiding traffic on a Trail within the Trail System.

(d) Right of Way. All motorized vehicles shall yield to non-motorized traffic at any intersection of a non-motorized Trail and a motorized Trail.

CHAPTER 14-08: TRUCK ROUTES

14-08-010. Findings and Purpose.
14-08-020. Definitions.
14-08-030. Restrictions.
14-08-040. Truck Route Designation.
14-08-050. Special Permit.
14-08-060. Signs.
14-08-070. Violations.

14-08-010. Findings and Purpose.

The Centerville City Council finds and declares that the travel of Restricted Vehicles on streets other than those identified as Truck Routes herein, in certain climatic conditions, results in abnormal and accelerated deterioration of public streets. Such travel also presents a hazard to public health and safety. The purpose of this Ordinance is to promote the safe and normal movement of traffic within the City and to prevent undue burden and damage to streets and highways within the City through the establishment of designated "Truck Routes".

14-08-020. Definitions.

As used herein, the following words shall have the meanings set forth below:

(a) "Restricted Vehicle" shall mean all vehicles, combination of vehicles or combinations of vehicles and load having a length of more than 45 ~~forty-five (45)~~ feet or a width of more than 8 ½ ~~eight and one-half (8½)~~ feet or a height of more than 14 ~~fourteen (14)~~ feet and all vehicles registered for 36,000 ~~thirty-six thousand (36,000)~~ pounds or more gross weight.

(b) "Truck Routes" shall mean those streets and highways within the corporate limits of the City designated in Section 14-08-040 which are open to Restricted Vehicle traffic.

14-08-030. Restrictions.

(a) Limited to Truck Routes. No Restricted Vehicle shall move upon any street within the jurisdiction of Centerville City which is not designated as a Truck Route, except as otherwise provided herein.

(b) Necessary Deviations. Restricted Vehicles may use other streets and highways within the City only when such use is sporadic and occasional and is necessary to access a destination point within the City which is not situated along a designated Truck Route or to access the designated Truck Routes when leaving from a place originating within the City which is not situated along a designated Truck Route. Any deviation from the designated Truck Routes as permitted herein shall be accomplished by the most reasonable and direct route available.

14-08-040. Truck Route Designation.

The following streets and parts of streets lying within the corporate boundaries of Centerville City are hereby designated as permissible "Truck Routes" within the City, as further delineated on the map attached hereto:

(a) Main Street from south City boundary to the north City boundary;

(b) Frontage Road from south City boundary to the north City boundary;

(c) 1250 West from the south City boundary to the north City boundary;

(d) 400 West from 300 South to Parrish Lane;

(e) Parrish Lane from the west City boundary to Main Street; and

(f) Any and all federal, state, or county roads or highways designated as such pursuant to Title 72 of the *Utah Code Annotated*, as amended, not otherwise described herein.

14-08-050. Special Permit.

(a) Special Permit. Persons may file with the City an application for a "Special Truck Routing Permit" authorizing the applicant to operate or move a Restricted Vehicle upon City streets not otherwise permitted herein. Unless otherwise provided, any permit issued hereunder shall be in addition to any and all other licenses or permits required by law.

(b) Application. Applications for Special Truck Routing Permits shall be made in writing to the City Police Department on a form provided by the City, which form shall require the following information:

(1) name and address of applicant;

(2) activity or purposes for which the permit is desired;

(3) description of the truck(s) to be operated or moved pursuant to the permit;

(4) specification of the roads or streets to be used; and

(5) specification of the time frame and number of trips to be covered by the permit.

(c) Fees. Each Application for Permit filed hereunder shall be accompanied by the required permit fees as set forth by Resolution by the City Council. No permit shall be issued until the proper fees have been paid to the City. Unless otherwise provided, the fees required herein shall be in addition to any and all other license or permit fees imposed by any other law.

(d) Issuance. The City Police Chief shall review all applications filed hereunder and may issue or deny a permit based upon consideration for the safety of the traveling public and protection of the foundation, surfaces, and structures of City streets. Issuance of the permit may be conditioned upon certain terms including, but not limited to the following:

(1) limiting the number of trips the vehicle may take;

(2) establishing seasonal or other time limits within which the vehicle may operate or move on the street;

(3) requiring bonds or other forms of security to assure payment to the City or other damaged parties for any damage or expense caused by such vehicle use; and

(4) requiring an indemnification agreement holding the City harmless from any damage or expense incurred as a result of such vehicle use.

(e) Denial. If the proper fees have not been paid, or the Police Chief determines that the application does not conform with applicable law or it is not in the public's best interest to issue the permit, the Police Chief shall deny the permit and notify the applicant in writing of such denial. The notice shall state the reasons for denial and inform the applicant that he or she may file a written appeal of such denial pursuant to subsection (k).

(f) Term. Any permit issued hereunder shall specifically state the term and purpose for which it was issued, not to exceed one ~~(1)~~ year.

(g) Limitation. Except as provided herein, each permit issued hereunder shall be valid only for the person to whom it is issued and only for the purpose for which is it issued.

(h) Records. The Police Department shall keep a record of all permits issued, including the name of the person to whom the permit was issued, the type of permit issued, and the fees collected.

(i) Display. Any permit issued hereunder shall be carried in the truck to which it refers and shall be available for inspection by any peace officer or authorized law enforcement agent.

(j) Revocation. Any permit issued hereunder may be revoked or suspended by the Police Chief due to the permit holder's failure to comply with the provisions hereof or other applicable law. Prior to revocation of any permit, proper notice and an opportunity to be heard shall be provided to the permit holder.

(k) Appeal. Any determination made by the Police Chief relative to the issuance, denial or revocation of a permit hereunder may be appealed to the City Manager by filing within 10 ~~ten (10)~~ days from the date of said determination, a written notice of appeal setting forth the grounds for the appeal and any other pertinent information. Such notice of appeal shall be filed by delivering an original and three ~~(3)~~ copies to the City Manager during regular business hours. Upon receipt of the appeal, the City Manager shall thoroughly and objectively investigate the matter and promptly issue a written decision stating the reasons for the decision and informing the appellant of any right to judicial review provided by law.

14-08-060. Signs.

The City shall install and maintain appropriate truck routing signs, signals and markings upon the streets and highways under its jurisdiction as necessary to regulate and guide traffic in accordance with the provisions of this Ordinance. All signs, signals and markings installed by the City shall conform to and be maintained in conformance with the Manual of Uniform Traffic Control Devices as adopted by the State Transportation Commission pursuant to *Utah Code Ann.* § 41-6a-301, as amended.

14-08-070. Violations.

(a) Penalty. Any person found in violation of this Ordinance shall be guilty of a class B misdemeanor and subject to imprisonment and/or fines as set forth in *Utah Code Ann.* §§ 76-3-204 and 76-3-301, as amended.

(b) Damages. In addition to any criminal penalties provided for herein, any person who operates or moves any vehicle within the City in violation of this Ordinance or who by any means willfully or negligently injures or damages any City street, equipment, or sign, shall be liable for the damages resulting therefrom.

CENTERVILLE
CITY COUNCIL
Staff Backup Report
4/19/2016

Item No. 7.

Short Title: Municipal Code and Fee Schedule Amendments Regarding Franchise Application Fees

Initiated By: City Attorney

Scheduled Time: 8:20

SUBJECT

a. Consider Municipal Code Amendments enacting Section 11-01-057 regarding Franchise Application Fees - Ordinance No. 2016-11
b. Consider City Fee Schedule Amendments regarding Franchise Application Fees - Resolution No. 2016-10

RECOMMENDATION

a. Approve Ordinance No. 2016-11 enacting Section 11-01-057 of the Centerville Municipal Code regarding Franchise Application Fees.

b. Approve Resolution No. 2016-10 amending the City Fee Schedule regarding Franchise Application Fees.

BACKGROUND

a. The City recently updated and recodified Title 17 (Telecommunications Systems) and Title 18 (Cable Systems). The updates to these Titles include new provisions regarding franchise application fees and require applicants to pay applicable fees for initial franchise applications as well as for franchise renewal, amendments or transfers. These updates also add requirements for applicants to pay reasonable costs and expenses for professional services incurred by the City in connection with franchise applications. These amendments were intended to ensure the City is covering its costs in reviewing, negotiating and approving franchise applications. Such drafting, reviewing, negotiating and approving of franchise agreements, or any amendments or renewals of franchise agreements, can take a significant amount of time and resources. Staff recommends amendments to Title 11 (Streets and Public Ways) to add similar franchise application fee requirements as adopted in Title 17 and Title 18. Such provisions regarding franchise application fees are set forth in the proposed Section 11-01-057 as set forth in Ordinance No. 2016-11. Staff recommends approval of Ordinance No. 2016-11.

b. As part of implementing the amendments to Title 11, Title 17 and Title 18 regarding franchise application fees, Staff has prepared recommended amendments to the City Fee Schedule. These amendments clarify the different types of franchise applications, including telecommunications franchises, cable franchises, and other franchises. The fee amendments also add line items for franchise renewals, amendments and transfers. Staff recommends adoption of Resolution No. 2016-10.

ATTACHMENTS:

Description

- Ordinance No. 2016-11-Franchise Application Fees
- Resolution No. 2016-10-Franchise Application Fees

ORDINANCE NO. 2016-11

AN ORDINANCE ENACTING SECTION 11-01-057 OF THE CENTERVILLE MUNICIPAL CODE REGARDING FRANCHISE APPLICATION FEES

WHEREAS, the City Council has previously adopted Title 11 of the Centerville Municipal Code regarding Streets and Public Ways, including Section 11-01-057 which requires any person or entity desiring to install improvements or facilities within any public right-of-way under the jurisdiction of the City to enter into a franchise agreement or other acceptable rights-of-way use or license agreement with the City authorizing the use of the public right-of way for such improvements or facilities; and

WHEREAS, the City Council desires to enact Section 11-01-057 regarding franchise application fees associated with any such requests for franchise or other acceptable rights-of-way use or license agreement as more particularly set forth herein.

NOW, THEREFORE, BE IT ORDAINED BY THE CITY COUNCIL OF CENTERVILLE CITY, STATE OF UTAH:

Section 1. Amendment. Section 11-01-057 of the Centerville Municipal Code regarding Franchise Application Fees is hereby enacted to read in its entirety as follows:

11-01-057. Franchise Application Fees.

In order to offset the costs to the City to review any application for a franchise or other acceptable rights-of-way use or license agreement as required under Section 11-01-055, the applicant shall be required to submit at the time of application the applicable franchise application fees as adopted by the City and set forth in the City Fee Schedule, which application fees shall be nonrefundable. An application fee shall also be paid when an amendment, renewal or transfer of such franchise is requested. The applicant shall also be required to pay reasonable costs and expenses for professional services, such as engineering and legal fees, incurred by the City in connection with any application, including a professional services deposit as adopted by the City and set forth in the City Fee Schedule.

Section 2. Severability Clause. If any section, part or provision of this Ordinance is held invalid or unenforceable, such invalidity or unenforceability shall not affect any other portion of this Ordinance, and all provisions, clauses and words of this Ordinance shall be severable. This Section shall become effective without codification.

Section 3. Effective Date. This Ordinance shall become effective upon publication or posting, or thirty (30) days after passage, whichever occurs first.

PASSED AND ADOPTED BY THE CITY COUNCIL OF CENTERVILLE CITY, STATE OF UTAH, THIS 19th DAY OF APRIL, 2016.

ATTEST: **CENTERVILLE CITY**

_____ By:_____
Marsha L. Morrow, City Recorder Mayor Paul A. Cutler

Voting by the City Council:

	"AYE"	"NAY"
Councilmember Fillmore	_____	_____
Councilmember Ince	_____	_____
Councilmember Ivie	_____	_____
Councilmember McEwan	_____	_____
Councilmember Mecham	_____	_____

CERTIFICATE OF PASSAGE AND PUBLICATION OR POSTING

According to the provisions of the U.C.A. § 10-3-713, as amended, I, the municipal recorder of Centerville City, hereby certify that foregoing ordinance was duly passed by the City Council and published, or posted at: (1) 250 North Main; (2) 655 North 1250 West; and (3) RB's Gas Station, on the foregoing referenced dates.

_____ DATE: _____
MARSHA L. MORROW, City Recorder

RECORDED this ____ day of _____, 20___.

PUBLISHED OR POSTED this ____ of _____, 20___.

RESOLUTION NO. 2016-10

A RESOLUTION AMENDING THE CENTERVILLE CITY FEE SCHEDULE REGARDING FRANCHISE APPLICATION FEES

WHEREAS, the City requires any person or entity desiring to install improvements or facilities within any public right-of-way under the jurisdiction of the City to enter into a franchise agreement or other acceptable rights-of-way use or license agreement with the City authorizing the use of the public right-of way for such improvements or facilities; and

WHEREAS, Utah law authorizes the City Council to establish by resolution fees for the use and operation of municipal property including streets and rights-of-way; and

WHEREAS, the City Council desires to amend, adopt and establish fair and reasonable franchise application fees that bear a substantial relationship to the costs involved in reviewing, drafting and approving such applications, including amendments, renewals and transfers of such applications; and

WHEREAS, the City Council desires to amend the City Fee Schedule regarding fees for franchise applications, amendments, renewals and transfers as more particularly set forth herein; and

WHEREAS, the City Council has determined that the amendments to the City Fee Schedule regarding franchise applications, amendments, renewals and transfers as set forth herein are fair and reasonable franchise application fees that bear a substantial relationship to the costs involved in reviewing, drafting and approving such applications.

NOW THEREFORE, IT IS HEREBY RESOLVED BY THE CITY COUNCIL OF CENTERVILLE, UTAH, AS FOLLOWS:

Section 1. Amendment. The City Council amends Section XI of the Centerville City Fee Schedule regarding Telecommunications Fees to more generally address Franchise Fees as more particularly set forth in **Exhibit A,** attached hereto and incorporated herein by this reference.

Section 2. Amendment. The City Council amends Section XIII of the Centerville City Fee Schedule regarding Street and Excavation Permit Fees as more particularly set forth in **Exhibit A,** attached hereto and incorporated herein by this reference.

Section 3. Severability. If any section, clause or portion of this Resolution is declared invalid by a court of competent jurisdiction, the remainder shall not be affected thereby and shall remain in full force and effect.

Section 4. Effective Date. This Resolution and the fees set forth herein shall become effective immediately.

PASSED AND ADOPTED BY THE CITY COUNCIL OF CENTERVILLE CITY, STATE OF UTAH, ON THIS 19th DAY OF APRIL, 2016.

CENTERVILLE CITY

By: _____
Mayor Paul A. Cutler

ATTEST:

_____
City Recorder, Marsha L. Morrow

CERTIFICATE OF PASSAGE AND EFFECTIVE DATE

According to the provisions of the U.C.A. § 10-3-719, as amended, resolutions may become effective without publication or posting and may take effect on passage or at a later date as the governing body may determine; provided, resolutions may not become effective more than three months from the date of passage. I, the municipal recorder of Centerville City, hereby certify that foregoing resolution was duly passed by the City Council and became effective upon passage or a later date as the governing body directed as more particularly set forth below.

_____ DATE: _____
MARSHA L. MORROW, City Recorder

EFFECTIVE DATE: ____ day of _____, 20_____.

EXHIBIT A
To Resolution No. 2016-10

FRANCHISE FEES

XI. FRANCHISE ~~TELECOMMUNICATIONS~~ FEES

~~A. APPLICATION FEE $500 Pay at Time of Application~~

~~B. FRANCHISE FEE Set forth in Franchise Agreement~~

A. Telecommunications Franchise Fees

1.	Application Fee	$500*	Pay at Time of Application
2.	Franchise Renewal	$100* **	Pay at Time of Renewal Request
3.	Franchise Amendment	$500*	Pay at Time of Application
4.	Transfer Fee	$500*	Pay at Time of Transfer Request
5.	Franchise Fee	As set forth in applicable Franchise Agreement in accordance with CMC 17-03-010	

* Applicants for any telecommunications franchise, renewal, amendment or transfer, shall also be required to pay reasonable costs and expenses for professional services, such as engineering and legal fees, incurred by the City in connection with any application, including a professional services deposit in the amount of $250.

** Applicants requesting a simple Franchise Renewal for extension of the term of the Franchise shall be subject to the $100 Franchise Renewal Fee. Any other requested changes to the City's form Franchise Agreement shall be considered a Franchise Amendment subject to the fees set forth herein for Franchise Amendments.

B. Cable Franchise Fees

1.	Application Fee	$500*	Pay at Time of Application
2.	Franchise Renewal	$100* **	Pay at Time of Renewal Request
3.	Franchise Amendment	$500*	Pay at Time of Application
4.	Transfer Fee	$500*	Pay at Time of Transfer Request
5.	Franchise Fee	In accordance with Franchise Fee adopted in Section 18-02-080 of the Centerville Municipal Code	

* Applicants for any cable franchise, renewal, amendment or transfer, shall also be required to pay reasonable costs and expenses for professional services, such as engineering and legal fees, incurred by the City in connection with any application, including a professional services deposit in the amount of $250.

** Applicants requesting a simple Franchise Renewal for extension of the term of the Franchise shall be subject to the $100 Franchise Renewal Fee. Any other requested changes to the City's form Franchise Agreement shall be considered a Franchise Amendment subject to the fees set forth herein for Franchise Amendments.

C. Other Franchise Fees – For Franchise Applications Not Covered by Telecommunications or Cable Franchise Fees set forth in Subsection A. and B.

1.	Application Fee	$500*	Pay at Time of Application
2.	Franchise Renewal	$100* **	Pay at Time of Renewal Request
3.	Franchise Amendment	$500*	Pay at Time of Application
4.	Transfer Fee	$500*	Pay at Time of Transfer Request
5.	Franchise Fee	As set forth in applicable Franchise Agreement	

* Applicants for any franchise, renewal, amendment or transfer, shall also be required to pay reasonable costs and expenses for professional services, such as engineering and legal fees, incurred by the City in connection with any application, including a professional services deposit in the amount of $500.

** Applicants requesting a simple Franchise Renewal for extension of the term of the Franchise shall be subject to the $100 Franchise Renewal Fee. Any other requested changes to an existing Franchise Agreement shall be considered a Franchise Amendment subject to the fees set forth herein for Franchise Amendments.

* * *

XIII. STREET AND EXCAVATION PERMIT FEES

* * *

6.	Franchise Application Fee	~~$500 Upon Issuance~~ See Franchise Fees Set Forth in Section XI

* * *

CENTERVILLE
CITY COUNCIL
Staff Backup Report
4/19/2016

Item No. 8.

Short Title: Award bid for audit contract

Initiated By: Blaine Lutz, Assistant City Manager/Finance Director

Scheduled Time: 8:30

SUBJECT

RECOMMENDATION

Select an accounting firm to perform the audit and prepare the Comprehensive Annual Financial Report (CAFR) for FY 2016 through FY 2020.

BACKGROUND

The contract for auditing and advisory accounting services contract will expire on June 30, 2016, with Hansen, Bradshaw, Malmrose and Erickson. Staff has gone through the RFP process, in accordance with the Uniform Accounting Manual, to obtain proposals to provide audit services for the next 5 fiscal years (RFP is attached).

The City has used the firm of Hansen, Bradshaw, Malmrose and Erickson (HBME) for a number of years. There is not a recommendation from the State Auditor's Office or the GFOA regarding how often a city should change auditors (attached excerpt from Uniform Accounting Manual). The City Council can choose to again contract with HBME for auditing services. The Council may also choose a firm from the proposals. Copies of the proposals are attached.

A copy of the RFP was sent to 9 accounting firms that are located within Davis, Weber, and Salt Lake Counties. The list of firms was obtained from a general search of firms and included firms that provide services to other cities, obtained from the financial statements on file with the State Auditor's Office of the entities in Davis and Weber Counties (list is attached). There are 5 firms that responded to the RFP. Copies of their proposals are attached. Of the 5, two have been disqualified from consideration. The proposal from Woods and Richards was received on April 2nd, a day later than the deadline. The proposal from Litz and Company did not complete the requirement of providing the "not to exceed" amount for FY 2020. Lisa Romney, City Attorney, agrees that firm should be disqualified for failing to fulfill this requirement, as the RFP is specific about this item.

The other three firms are all very qualified to provide the requested services. A rating of the firms is attached. Fees are the differentiating item of the 3 proposals. HBME received the highest overall rating, because of the lowest proposed fees, then Keddington and Christensen, followed by Ulrich and Associates.

A contract with the selected firm will be brought back to the Council for approval at a later meeting.

ATTACHMENTS:

Description

- Auditor RFP
- Excerpt from UAM
- Assessment of proposals
- HBME proposal
- Keddington & Christensen proposal
- Ulrich & Associates proposal
- Litz & Company proposal
- Woods & Richards proposal
- List of audit firms

CENTERVILLE CITY

250 North Main • Centerville, Utah 84014-1824 • (801) 295-3477 • Fax: (801) 292-8034

Mayor
Paul A. Cutler

City Council
Tamilyn Fillmore
William Ince
Stephanie Ivie
George McEwan
Robyn Mecham

City Manager
Steve H. Thacker

REQUEST FOR PROPOSAL TO PROVIDE AUDIT SERVICES FOR CENTERVILLE CITY, UTAH

March 7, 2016

I. BACKGROUND INFORMATION

Centerville City was incorporated in 1915 with a current population of approximately 16,500. Currently the City has the following funds and account groups: General Fund; Special Revenue; Debt Service (4); Park, Storm Drain, & Special Projects Capital Improvement Projects; Enterprise: Water, Sanitation, Drainage, Telecommunications; Account Groups: General Fixed Assets & Long Term Debt. In addition to the funds and account groups mentioned, The Redevelopment Agency of Centerville City, is an additional component organizations that is part of the reporting entity. Total revenue for all funds and component organizations was $14,854,478 for the fiscal year ended June 30, 2015. Centerville City uses Caselle software for its accounting applications.

Centerville City is required by State law to provide an annual audit of its financial statements by a Certified Public Accountant in accordance with generally accepted audited standards. This audit must be submitted to the State Auditor's Office within six months after the end of the fiscal year.

Centerville City has received the Certificate of Achievement of Excellence in Financial Reporting from the Government Finance Officers Association for the past 16 years. Copies of the last 10 fiscal years are available on the Utah State Auditor's website, http://auditor.utah.gov/.

II. OBJECTIVE AND SCOPE

A financial audit is requested for the fiscal year ended June 30, 2016. The audit shall be performed in accordance with generally accepted auditing standards, as promulgated by the American Institute of Certified Public Accountants (AICPA); the *AICPA Audits of State and Local Governmental Units* audit and accounting guide; and the *Government Auditing Standards*, published by the U.S. General Accounting Office. Federal compliance test work will be done in accordance with the Office of Management and Budget Circular A-133 and/or "Uniform Administrative Requirements, Cost Principles, and Audit Requirements for Federal Awards"

In the last 5 fiscal years, Centerville City has not had Single audits performed.

MAKING Life BETTER
Centerville City

The City does not anticipate the need for a Single Audit in the current fiscal year.

The audit must be completed, and the report issued prior to December 31st of 2016 and subsequent years. The auditor must deliver ten paper copies and one electronic copy to Centerville City, who in turn will be responsible for delivering a copy of the report to the State Auditor's Office and other mandatory or interested parties.

The auditor will be involved in drafting, typing, and printing financial statements, and will assist management's efforts to obtain the Government Finance Officers Association's Certificate of Achievement of Excellence in Financial Reporting.

III. REPORT REQUIREMENTS

For financial audits, the auditor shall examine the financial statements and records of the entity and shall issue an auditor's opinion on the entity's financial statements with an in-relation-to opinion on combining and supplementary information, if any. Such financial statements shall be prepared in conformity with generally accepted accounting principles.

The auditor shall issue a compliance report based on an audit of general purpose or basic financial statements and a report on the internal control structure; both in accordance with *Government Auditing Standards*.

The auditor shall prepare and include a statement expressing positive assurance of compliance with State fiscal laws identified by the state auditor and other financial issues related to the expenditure of funds received from Federal, State, or local governments. (*This statement is in addition to the compliance opinion required as part of a single audit.*)

The auditor shall prepare a comprehensive management letter including the auditor's findings and recommendations relative to the internal accounting and administrative controls, compliance with laws and regulations as applicable and adherence to generally accepted accounting principles.

The auditor shall include the written responses from Centerville City for each recommendation included in the state compliance letter and the management letter required by the *State of Utah Legal Compliance Audit Guide*.

(*For audits completed in accordance with the Single Audit Act, the auditor shall examine the financial systems and records as they relate to the various federal grants and agreements and shall issue auditor's report on internal and administrative control and on compliance with federal and state laws and regulations as required by generally accepted auditing standards promulgated by the AICPA.*)

IV AUDIT TERM

If the selected certified public accounting firm performs satisfactorily for the June 30, 2016 audit, it is anticipated that the same firm will be engaged to perform the audit for the succeeding four years, subject to an annual evaluation and Centerville City council Appropriation. The term may be extended beyond the total five year engagement, based on mutual agreement by and between the auditor and Centerville City.

V. PROPOSAL QUALIFICATION REQUIREMENTS

Interested certified public accounting firms should include the following information in their proposal to perform the audit of the fiscal year ending June 30, 2015:

A. Profile of the Independent Auditor

The profile of the proposers should provide general background information. This should include:

1. The locations of the office from which the work is to be done and the number of professional staff, by staff level, employed at the office.

2. A statement on the proposer's staff.

3. A positive statement that the following mandatory criteria are satisfied:

   (a) An affirmation that the proposer is properly licensed for practice as a certified public accountant in the State of Utah.

   (b) An affirmation that the proposer meets the independence requirements of the American Institute of Certified Public Accountants and the *Government Auditing Standards*, 2003 revision, published by the U.S. General Accounting Office.

   (c) An affirmation that the firm meets the continuing education and external quality control review requirements contained in the *Government Auditing Standards*, 2003 revision, published by the U.S. General Accounting Office.

B. Proposer's Qualifications

1. Identify the audit partners, audit managers, field supervisors and other staff who will work on the audit, including staff from other than the local office. Resumes including relevant experience and continuing education for the staff auditors up to the individual with final responsibility for the engagement should be included.
2. Describe the recent local office auditing experience similar to the type of audit requested. Provide a comprehensive list of all governmental audits performed in the last seven years and contact person for that entity.
3. If other auditors are to participate in the audit, those auditors should be required to provide similar information.

C. Proposer's Approach to the Examination

Submit a general audit work plan to accomplish the scope defined in these guidelines. The audit work plan should demonstrate the proposer's understanding of the audit requirements and the audit tests and procedures to be applied in completing the audit plan. The plan should detail the expected number of audit hours by staff level. The planned use of specialists should also be specified.

Note: Historically the City has not commenced the audit process until October with the completion in December.

D. Fees

Supply the billing rates, estimated number of billable hours, other billable expenses and a "not-to-exceed" fee for the audit, inclusive of travel, per diem and all other out-of-pocket expenses. As noted in section IV, it is expected that if the selected certified public accounting firm performs satisfactorily for the June 30, 2016 audit, it will be engaged to perform the audit for the succeeding 4 years. Therefore, the not-to-exceed fee information requested above should be provided on an annual basis for 5 years.

List of fees for other accounting services that may be needed or requested by hour and staff level.

E. Non-discrimination Clause

Affirm that the firm does not discriminate against any individual because of race, religion, sex, color, age, handicap or national origin, and that these shall not be a factor in consideration for employment, selection of training, promotion, transfer, recruitment, rates of pay, or other forms of compensation, demotion, or separation.

VI. CONTRACTUAL ARRANGEMENTS

A. Audit programs, work papers and reports must be retained for a period of three years after the completion of the audit and made available for inspection by the Centerville City or government auditor's if requested by them.

B. Payments for the audit services will be paid in incrementally and final payment will be made upon receipt of the audit reports required in section III.

C. Centerville City staff will be available to prepare schedules, trial balances, and provide documentation to assist the auditor to the best of their ability and as their schedules permit during the course of the audit.

VII. EVALUATION OF PROPOSALS

The following criteria will be considered when making an evaluation of the proposals:

A. Technical Factors

1. Responsiveness of the proposal in clearly stating an understanding of the audit services to be performed.

   (a) Appropriateness and adequacy of proposed procedures.
   (b) Reasonableness of time estimates and total audit hours.
   (c) Appropriateness of assigned staff levels.

2. Technical and applicable experience of the firm.

3. Qualifications of staff including experience of responsible staff.

4. Structure of firm considering the scope of the audit.

5. Geographic location of key personnel and responsible office.

6. Results from references, and other information obtained regarding the firm.

B. Cost of the Audit - As described in section V subsection D.

C. Right to Reject

Centerville City reserves the right to reject any and all proposals submitted and to request additional information from all proposers. Any contract awarded will be made to the independent certified public accounting firm who, based on evaluation of all responses, applying all criteria and oral interviews, if necessary, is determined to be the best to perform the audit as needed by Centerville City.

VIII. SUBMISSION OF PROPOSALS

Two copies of your proposal must be submitted to Blaine Lutz, Centerville City Finance Director, no later than April 1st at 5:00 pm. Selection of the CPA firm will be made by April 19, 2016, and all firms submitting proposals will be notified immediately as to the selection results. No proposal will be considered that is not received at or prior to the above time and date.

IX SOURCES OF INFORMATION

Individual pre-proposal conferences may be scheduled, or for information necessary to complete the proposal prior to the April 1 deadline, contact Blaine Lutz at 801-295-3477, blainel@centervilleut.com or 250 North Main Centerville, Utah 84014.

STATE OF UTAH
UNIFORM ACCOUNTING MANUAL FOR CITIES

Reference: C. 07
Page: 1 of 1
Subject: Obtaining Audit Services
Effective Date: 1 April 1986
Revision Date: 1 January 2012

Section C.05.01 contains rules establishing audit requirements for political subdivisions and nonprofit organizations. Section R130-5-4 of those rules specify the requirements local governments must follow in obtaining an audit of its records. **The State Auditor's Office generally does not specify when local governments must change auditors.** However, when a local government does obtain a new auditor, the rules in that section must be followed in selecting an independent auditor. Those rules require local governments to go through a proposal process.

With the assistance of the Municipal Fiscal Advisory Committee, the following "Request for Proposal" (RFP) was developed to assist local governments in obtaining the information necessary to assess various qualifications of CPAs desiring to perform an entity's audit. Since each entity is slightly different and has specialized needs, a uniform standard request will not always provide the information necessary to make a good decision concerning future audit services.

The paragraphs shown in the RFP are optional and additional paragraphs may be added as needed. It is merely a guide to address some significant areas in auditor selection, and also to provide prospective auditors with enough information to make a knowledgeable bid. Also, the example is drawn up for a city or town but applies equally well to a county or special district.

Once the bids have been received, the entity will need to evaluate the proposals and select an auditor. All too often the only criteria used is price. Although this is an important consideration, it should not be the only consideration.

Other areas to consider during the evaluation process and to assign a "weighting" factor to are:

A. Does the firm clearly understand the work to be performed?

B. The firm's experience in governmental auditing.

C. Will work be completed in time to meet statutory deadlines?

D. Do individuals assigned to the audit have governmental experience?

E. Can the firm offer ongoing assistance and are they available for other services?

F. Others that you feel are necessary.

A sample contract for audit services is also included in Section C.07.02.

Auditor Proposals
2016

Proposal Requirements	HBME	Litz & Co.	Ulrich & Assoc.	Keddington	Woods
Location of offices	x	x	x	x	disqualified
Statement of staff	x	x	x	x	
Statement of mandatory requirements					
a) Certified accountant in State of Utah	x	x	x	x	
b) Independence requirements - AICPA	x	x	x	x	
c) Continuing education	x	x	x	x	
Proposers qualifications					
1) Staff	x	x	x	x	
2) Experience	x	x	x	x	
3) Other auditors	x	x	x	x	
Approach to the examination	x	x	x	x	
Fees	x	**incomplete**	x	x	
Non-discrimination clause	x	x	x	x	

	2016	2017	2018	2019	2020	
Hansen, Bradshaw, Malmrose and Erickson	$ 9,000	$ 18,000	$ 18,000	$ 18,500	$ 19,500	$ 83,000
Litz and Company	$ 17,250	$ 17,750	$ 18,250	$ 18,750		$ 72,000 *
Ulrich & Associates	$ 20,575	$ 21,190	$ 21,830	$ 22,480	$ 23,150	$ 109,225
Keddington & Christensen	$ 18,000	$ 18,000	$ 18,000	$ 18,000	$ 18,000	$ 90,000
Woods Richards & Associates	$ 17,725	$ 17,725	$ 17,725	$ 17,725	$ 17,725	$ 88,625

(received after deadline)

* incomplete

Proposal Requirements	HBME	Litz & Co.	Ulrich & Assoc.	Keddington	Woods
Location of offices	x	x	x	x	disqualified
Statement of staff	x	x	x	x	
Statement of mandatory requirements					
a) Certified accountant in State of Utah	x	x	x	x	
b) Independence requirements - AICPA	x	x	x	x	
c) Continuing education	x	x	x	x	
Proposers qualifications					
1) Staff	x	x	x	x	
2) Experience	x	x	x	x	
3) Other auditors	x	x	x	x	
Approach to the examination	x	x	x	x	
Fees	x	**incomplete**	x	x	
Non-discrimination clause	x	x	x	x	

Technical Factors					
Responsiveness					
a) Adequacy of procedures	5	n/a	5	5	n/a
b) Reasonableness of audit hours	5	n/a	5	5	n/a
c) Appropriateness of assigned staff	5	n/a	5	5	n/a
Experience	5	n/a	5	5	n/a
Qualifications	5	n/a	5	5	n/a
Structure	5	n/a	5	5	n/a
Location	5	n/a	5	5	n/a
References	5	n/a	3	4	n/a
Cost	40		38	39	

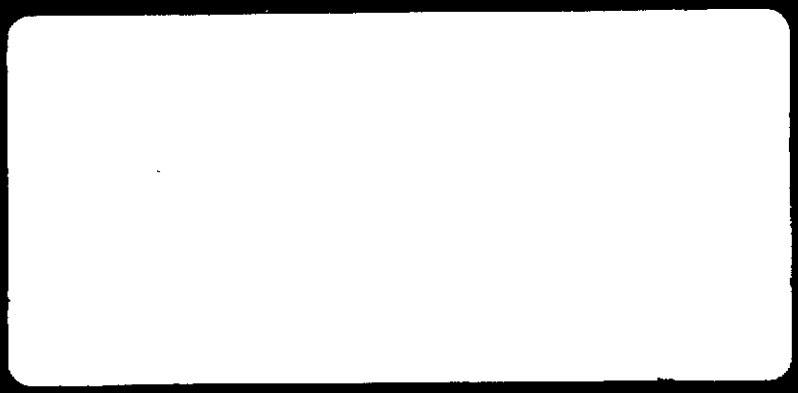

Hansen, Bradshaw, Malmrose & Erickson, P.C.

CERTIFIED PUBLIC ACCOUNTANTS

CENTERVILLE CITY, UTAH

PROPOSAL FOR PROFESSIONAL AUDITING SERVICES

JUNE 30, 2016 – JUNE 30, 2020

HANSEN, BRADSHAW, MALMROSE & ERICKSON, P.C.
559 West 500 South
Bountiful, UT 84010
(801) 296-0200
(801) 296-1218 (fax)

Contact Person – Edwin L. Erickson, CPA
Email Address: ede@hbme.com
www.hbme.com

March 28, 2016

TABLE OF CONTENTS

Pages

Transmittal Letter 1-2

Statement of Qualifications:

- Profile of Hansen, Bradshaw, Malmrose & Erickson, P.C. 3-4
- Key Audit Team Members: Qualifications and Resumes 5-9
- Similar Engagements and Largest Government Clients 10

Specific Audit Approach 11-18

Proposed Audit Schedule 19

Proposed Audit Fees 20

References 21

Additional Information:

- Peer Review Report 22

Hansen, Bradshaw, Malmrose & Erickson

A Professional Corporation
CERTIFIED PUBLIC ACCOUNTANTS

559 West 500 South
Bountiful, Utah 84010
801-296-0200
Fax 801-296-1218

E. Lynn Hansen, CPA
Clarke R. Bradshaw, CPA
Gary E. Malmrose, CPA
Edwin L. Erickson, CPA
Michael L. Smith, CPA
Jason L. Tanner, CPA
Robert D. Wood, CPA

Aaron R. Hixson, CPA
Ted C. Gardiner, CPA
Jeffrey B. Miles, CPA

Members of the American Institute of Certified Public Accountants

Members of the Private Company Practice Section

March 28, 2016

Centerville City, Utah
Blaine Lutz, Finance Director
250 North Main Street
Centerville, UT 84014

To Whom It May Concern:

Thank you for inviting us to submit a proposal to continue providing professional auditing services to Centerville City, Utah ("the City"). We appreciate the opportunity we have had to serve as the City's auditors for the past several years. You would continue to be an especially important client to our firm. The services we perform for you will receive our highest priority. We believe we have the means to continue providing a quality audit with vital knowledge and superior staffing to meet your needs.

We would be very pleased to continue serving as your independent accounting firm, and we hope that our proposal conveys our desire and qualifications to continue to fulfill your current and future professional needs.

You will benefit from our services in the following ways:

- EXPERIENCED PROFESSIONALS: Six of our professionals are partners and eight are directors, principals or managers, out of a total of twenty-two personnel. At Hansen, Bradshaw, Malmrose & Erickson P.C., our partners and managers work closely with clients. As a result, you will have our personal attention whenever needed. We also will give you the continuity of service you expect.

- MUNICIPAL GOVERNMENT AUDIT EXPERIENCE: Collectively and individually, our audit team has many years' experience in performing and managing governmental entity audits, including OMB Subpart F Single Audits and Utah State Compliance Audits. Some of our other current clients similar to Centerville City include: Kaysville City, Riverton City, Herriman City, Taylorsville City, and Bluffdale City.

- TIMELINESS: We will meet your deadlines. Our professionals are trained to anticipate, identify and respond to your needs in a timely manner. We will work closely with your management team to optimize our audit services to your needs. We believe in clear, up-front and open communication with no surprises. We understand and will comply with the schedules and scope for the audit, as outlined in your Request for Proposal, and will perform all work within the time frames outlined.

- FEES: We can provide you with timely, high-quality professional work at a reasonable fee. The fee for the audit includes routine phone calls and meetings during the year. Prior to performing any specialized services, we will discuss an estimate of the fee and obtain your approval before commencing work on special projects. The choice of services is always yours, and you always have control over fees.

These key benefits will become a reality as we work closely with you. We hope we have given you some additional insight into the manner in which Hansen, Bradshaw, Malmrose & Erickson, P.C. professionals serve our clients.

We look forward to serving you.

Sincerely,

Edwin Erickson

Edwin L. Erickson, CPA
Partner

PROFILE OF HANSEN, BRADSHAW, MALMROSE & ERICKSON, P.C.

BACKGROUND OF FIRM

Hansen, Bradshaw, Malmrose & Erickson, P.C. (HBME) was formed in April 1980 and is a local firm located in Bountiful, Utah. The firm currently has six partners with a total of twenty-two employees. We have tailored our practice to serve local governments and small-to-medium size organizations. We work hard to keep current with our clients' needs and make sure their organizational plans become realities.

Our CPA practice is very much a firm; not just practitioners sharing office space. Each professional has an area of specific emphasis; therefore, giving clients the benefits of experts in areas of service. The composition of our staff is as follows:

Partners	6
Director/Principals	3
Managers	5
Seniors	3
Staff/Administrative	5
Total	22

We are unique in our approach to client service. Our partners and managers work directly with each engagement and function as in-charge accountants, rather than merely reviewing the final product. As a result, your engagement is conducted by professionals with many years' experience, rather than recent college graduates. At HBME, five professionals are full-time auditors, including our managing partner. Each of the auditors have extensive governmental auditing experience, ranging from 5 to 37 years. We also have five other professional staff who participate in audit engagements, as needed. We will also use 2 administrative staff to assist the audit team, as applicable.

STAFF CONTINUITY

We take pride in the low amount of staff turnover our firm has experienced over the years. During the past five years, we have had one employee leave our firm. We understand the importance our clients place on continuity of service and commit to you that the partners, managers and staff assigned to your engagement will not be reassigned to other clients.

COMPUTER AUDITING AND OTHER SOFTWARE CAPABILITIES

All of our personnel have significant computer experience. We have experience in using various audit software packages of local governments, including Tyler Technology, PeopleSoft, Caselle, and many others. We also have assisted various governmental clients in general ledger and ERP software transitions. We recognize the many complexities of this significant change, especially relating to the external reporting process, and believe our staff can help ease the stresses as they relate to the audit.

PROFESSIONAL LICENSES

We affirm that HBME (a Professional Corporation) is properly licensed to practice as certified public accountants in the State of Utah.

PROFILE OF HANSEN, BRADSHAW, MALMROSE & ERICKSON, P.C.

INDEPENDENCE

We affirm that HBME personnel are independent in relation to the City, as defined by the American Institute of Certified Public Accountants and by the Government Auditing Standards, 2011 revision, published by the U.S. General Accounting Office. Furthermore, HBME has not engaged in any professional relationships involving the City for the past five years.

CONTINUING EDUCATION AND QUALITY REVIEW

All partners and professional staff of HBME receive a minimum of 80 hours of continuing education every two years. All personnel who will be assigned to the City's engagement have received specialized governmental accounting and auditing training, including requirements with OMB Subpart F of the Uniform Grant Guidance (formerly OMB Circular A-133). We affirm that HBME meets the continuing education requirements contained in Government Auditing Standards, 2011 revision, published by the U.S. General Accounting Office.

As a member of the AICPA Private Companies Practice Section, we are required to undergo a peer review every three years. We successfully completed our last peer review in January 2015, and received an unmodified opinion. A copy of our last peer review report and letter of comments is included at page 24, as required by Government Auditing Standards, 2011 revision. We affirm that we comply with the quality control review requirements in Government Auditing Standards, 2011 revision.

FEDERAL OR STATE REVIEWS OF AUDITS

HBME has had no desk or field reviews of its audits by any federal auditors or federal regulators during the past three years. During 2014, the Utah State Auditor's Office began to conduct field reviews on a random selection of audit firms who perform audits for Utah-based governmental entities. HBME was selected for review, and received a "pass," based on a pass/needs improvement/fail grade. A copy of this review letter is included at page 25. Those who conducted the field review also gave us high marks for our use of current audit software and other technologies we incorporate in our audits.

LIABILITY INSURANCE

We affirm that HBME carries professional liability insurance.

AFFIRMATIVE ACTION

We also state that during the course of the audit, those employees associated with HBME will not discriminate against any employee who is employed in the work covered by the contract, or against any applicant for such employment because of race, religion, sex, color, age, handicap, or national origin. In addition, these items will not be a factor in consideration for employment, selection of training, promotion, transfer, recruitment, rates of pay, or other forms of compensation, demotion or separation.

FORMAL INVESTIGATION AND OTHER CLAIMS

HBME, its partners and professionals, are not the focus of any pending or ongoing litigation, formal investigation, or administrative proceedings related to attestation services.

KEY AUDIT TEAM MEMBERS

ENGAGEMENT TEAM

A key element in your selection of a public accounting firm is the people you will work with on the engagement. Hansen, Bradshaw, Malmrose & Erickson, P.C. professionals have served organizations such as yours throughout their careers. They understand your needs and are highly motivated to help you make your organization even more successful. Shown below are brief descriptions of the responsibilities of those who will be serving you on-site. Their resumes are further detailed on the following pages.

Edwin L. Erickson, CPA, Partner, in charge of Accounting & Auditing Services, will be responsible for coordinating and performing all audit services provided, and for the review of all reports. He will also be closely involved in any special services requested.

Robert D. Wood, CPA, Partner, will be responsible for the final review of all reports and assistance with any technical issues.

Jeffrey B. Miles, CPA, Manager, will be the on-site lead supervisor. He will oversee and perform most of the audit fieldwork and supervise senior and staff accountants.

Shawn F. Martin, CPA, Senior, will assist with the performance of audit fieldwork, and supervision of work performed by staff accountants.

KEY AUDIT TEAM MEMBERS

EDWIN L. ERICKSON, CPA
Audit Partner
Hansen, Bradshaw, Malmrose & Erickson, P.C.

Mr. Erickson has been practicing as a Certified Public Accountant for over 37 years. His primary emphasis has been in the planning, supervision and performance of audit and review engagements for small and medium-sized businesses. He has had significant experience with several cities, and other government entities.

Mr. Erickson is responsible for all audit and review engagements performed by the firm. He assisted in the review of all financial statements issued by Grant Thornton's Utah offices and was an instructor in that firm's national audit training programs for seven years.

PROFESSIONAL EXPERIENCE:

1991 - Present	Hansen, Bradshaw, Malmrose & Erickson, P.C., Partner
1979 - 1991	Grant Thornton, Senior Manager
1978 - 1979	Peat, Marwick, Mitchell & Co., Audit Staff
1985 - 1986	Westminister College, Instructor

INDUSTRY EXPERIENCE:

City governments	Transportation
Special districts	Oil and gas companies
Housing authorities	Truck and automobile dealerships
Non-profit organizations	Banks and savings and loan associations
Manufacturing	Timeshare homeowners' associations
Wholesale and retail companies	Mining companies
SEC reporting companies	Pension and profit sharing trusts

SPECIALIZED TRAINING:

Government Finance Officers Association Reporting under GASB 34 Model Seminar
GFOA Intermediate Governmental Accounting Seminar
Utah Association of CPAs State and Local Government Update Conferences
Utah Government Finance Officers Conference
Local Office Governmental Accounting and Auditing Training
Utah State Auditor's Office Local Government Annual Updates

ACADEMIC EXPERIENCE:

B.S.	Utah State University
Major	Accounting
Minor	Business Administration, French

OTHER:

Member	Utah Association of Government Finance Officers
Member	American Institute of CPAs
Member	Utah Association of CPAs
Instructor	Grant Thornton National Seminars

KEY AUDIT TEAM MEMBERS

ROBERT D. WOOD, CPA
Audit Partner
Hansen, Bradshaw, Malmrose & Erickson, P.C.

Mr. Wood has been practicing as a Certified Public Accountant for over 15 years. He has had significant experience with several cities, and other government entities, including Riverton City, Layton City, Draper City, Taylorville City, Kaysville City, Provo City, Murray City, and Midvale City. He worked at the Utah State Auditor's Office for many years, working on audits of various State agencies and State universities and colleges. He currently supervises managers and staff during all phases of audit engagements.

Mr. Wood is responsible for audit and review engagements performed by the firm. He also has assisted several Cities and Counties in Utah with their initial conversion to GASB 34 compliant financial statements.

PROFESSIONAL EXPERIENCE:

2005 - Present	Hansen, Bradshaw, Malmrose & Erickson, P.C.
2000 - 2005	Utah State Auditor's Office

INDUSTRY EXPERIENCE:

City and County governments	Non-profit organizations
Special districts	Manufacturing
Colleges and Universities	Wholesale and retail companies
State government	Construction

SPECIALIZED TRAINING:

GFOA Advanced Governmental Accounting Seminar
Utah Association of CPAs State and Local Government Update Conferences
Utah Government Finance Officers Conference
Local Office Governmental Accounting and Auditing Training
Utah State Auditor's Office Local Government Annual Updates

ACADEMIC EXPERIENCE:

MAcc - Audit	Weber State University
B.S.	Weber State University

OTHER:

Member	American Institute of Certified Public Accountants
Member	Utah Association of Certified Public Accountants
Member	Government Finance Officers Association
Member	Utah Government Finance Officers Association

KEY AUDIT TEAM MEMBERS

JEFFREY B. MILES, CPA
Audit Manager
Hansen, Bradshaw, Malmrose & Erickson, P.C.

Mr. Miles, CPA (Idaho), has had experience in public accounting for over 10 years. His responsibilities include performance of audits for small and medium-sized businesses, cities and non-profit organizations, including Provo City, Riverton City, Herriman City, Logan City, Bluffdale City, and Taylorsville City.

PROFESSIONAL EXPERIENCE:

2008 - Present	Hansen, Bradshaw, Malmrose & Erickson, P.C.
2006 - 2008	PriceWaterhouseCoopers, LLP

INDUSTRY EXPERIENCE:

- Large and medium sized governments
- Non-profit organizations
- Wholesale and retail companies
- Manufacturing companies
- Defined contribution retirement plans

SPECIALIZED TRAINING:

- Utah State Auditor's Office Local Government Annual Updates
- GFOA Advanced Governmental Accounting Seminar
- Utah Government Finance Officers Conference

ACADEMIC EXPERIENCE:

BBA – Accounting and Finance	Idaho State University

OTHER:

Member	American Institute of Certified Public Accountants
Member	Utah Association of Certified Public Accountants
Member	Utah Government Finance Officers Association

KEY AUDIT TEAM MEMBERS

SHAWN F. MARTIN, CPA
Audit Senior
Hansen, Bradshaw, Malmrose & Erickson, P.C.

Mr. Martin has had experience in public accounting for over five years. His responsibilities include performance of audits for small and medium-sized businesses, governmental entities, and not-for-profit organizations, including Provo City Midvale City, Logan City, Riverton City, Draper City, Taylorsville City, Layton City, Kaysville City, and Provo City School District.

PROFESSIONAL EXPERIENCE:

2013 - Present	Hansen, Bradshaw, Malmrose & Erickson, P.C.
2010 - 2013	Jones Simkins, LLC

INDUSTRY EXPERIENCE:

Large and medium-size governments
Non-profit organizations
Manufacturing
Wholesale and retail companies

SPECIALIZED TRAINING:

Utah State Auditor's Office Local Government Annual Updates
GFOA Intermediate Governmental Accounting Seminar
Utah Government Finance Officers Conference

ACADEMIC EXPERIENCE:

MAcc	Weber State University
B.S. - Psychology	Weber State University

OTHER:

Member	American Institute of Certified Public Accountants
Member	Utah Association of Certified Public Accountants
Member	Utah Government Finance Officers Association

SIMILAR ENGAGEMENTS AND LARGEST GOVERNMENT CLIENTS

We have significant experience with government entities, including financial and OMB Subpart F compliance audits.

Similar Engagements with Other Governmental Entities

HBME has been engaged to perform the year-end financial audit services for the following Utah municipalities and other governmental entities through and for the year ended June 30, 2015. The completion date for all of the clients listed were within the six-month time frame, as required by Utah State Law. All required submissions were on-time. See contact information in the *references* section.

Client	Scope of Engagement*	Years Served	Service Through Date	Engagement Partner	Engagement Manager
Municipalities					
Bluffdale City	Financial Audit	11 years	06/30/2015	Ed Erickson	Jeff Miles
Centerville City	Financial Audit	13 years	06/30/2015	Ed Erickson	Jeff Miles
Draper City	Financial Audit	2 years	06/30/2015	Robert Wood	Shawn Martin
Herriman City	Financial Audit	1 year	06/30/2015	Robert Wood	Robert Wood
Kaysville City	Financial Audit	3 years	06/30/2015	Robert Wood	Shawn Martin
Layton City	Financial Audit	14 years	06/30/2015	Robert Wood	Robert Wood
Logan City	Financial Audit	6 years	06/30/2015	Ed Erickson	Aaron Hixson
Midvale City	Financial Audit	9 years	06/30/2015	Ed Erickson	Aaron Hixson
Provo City	Financial Audit	10 years	06/30/2015	Ed Erickson	Aaron Hixson
Provo City School District	Financial Audit	3 years	06/30/2015	Ed Erickson	Aaron Hixson
Riverton City	Financial Audit	4 years	06/30/2015	Robert Wood	Jeff Miles
Taylorsville City	Financial Audit	8 years	06/30/2015	Robert Wood	Jeff Miles
Local Districts					
Jordan Valley Water Conservancy District	Financial Audit	5 years	06/30/2015	Ed Erickson	Aaron Hixson
Kearns Improvement District	Financial Audit	3 years	12/31/2015	Robert Wood	Robert Wood
Oquirrh Recreation and Parks District	Financial Audit	9 years	12/31/2015	Robert Wood	Robert Wood
White City Water Improvement District	Financial Audit	11 years	12/31/2015	Ed Erickson	Jeff Miles

* Financial audit services include OMB Subpart F (Single Audit) and Utah State Compliance requirements

GFOA Certificate of Achievement Experience

Many of the clients listed above, including Centerville City, prepare a CAFR and submit their financial statements for GFOA certification annually. These entities have successfully been awarded and received the GFOA Certificate of Achievement for Excellence in Financial Reporting for each of the years for which we have been engaged to provide their audit services. HBME assists these clients in ensuring the submitted statements are of the highest possible quality and comply with certificate of achievement requirements.

SPECIFIC AUDIT APPROACH

At Hansen, Bradshaw, Malmrose & Erickson, P.C. (HBME), we promise you a better overall experience. While we recognize that multiple firms are capable of accomplishing the objectives of an audit, HBME appreciates that every situation and every organization is different and we tailor our approach based on the needs of each governmental client.

HBME values its business relationships and demonstrates this through our partner and manager involvement. Our senior level professionals are involved with our clients and are accessible throughout the year. They do not delegate all tasks to staff, but rather stay involved onsite during fieldwork as well as staying connected throughout the year. This approach delivers the greatest benefit to our clients in that we are able to stay abreast of changes in and updates to our client's operating environment and partner with them to achieve optimal results.

Additionally, our clients experience a communication approach that stands apart in both style and frequency. Because we recognize that effective communication is critical throughout the entire audit process, our service approach is one where communication begins with planning and continues through the year. Additionally, we take a collaborative communication approach with our clients and include them in the process as our peers. Our clients offer a wealth of knowledge and information about their organization, and communicating with them as a business partner ultimately produces the best outcome.

During the course of our auditing services, we will hold periodic meetings with your management. This continuous communication ensures you are fully informed and provides us with timely information that will enable us to best serve your organization. Prior to beginning the engagement, we will discuss with management:

- The engagement time line
- The audit approach and process
- Additional considerations that may affect scope, schedules and workpapers to be prepared by your personnel

Sampling

Sampling may be performed for tests of controls, compliance testing and substantive tests of certain accounts and transactions. During our audit of basic financial statements, we will also select various transactions for testing based on materiality assessed at the appropriate level. These transactions may include such items as capital assets additions, expenditures, subsequent disbursements and subsequent receipts. We will be pleased to discuss specific sample sizes and selection methods when they are determined, either during audit planning or during fieldwork. We will select the appropriate sample size to support our conclusions in compliance with laws, regulations, and auditing standards.

We will use confirmations in the areas of cash and investments, debt, state retirement systems and other areas deemed necessary.

We will perform tests of the City's compliance with certain provisions of laws, regulations, contracts and grants. We will assess the risk of material misstatement resulting from violations of laws and regulations having a direct and material effect on the determination of financial statement amounts. These laws and regulations can relate to items such as budgetary compliance, purchasing compliance and cash and investment compliance, as well as single audit compliance, as applicable.

SPECIFIC AUDIT APPROACH

We will combine compliance tests of laws and regulations that involve the inspection of documentation supporting transactions with substantive tests of transactions and tests of control procedures.

Our audit will meet all federal and state requirements, as applicable. Samples will be used to the extent necessary to support our conclusions on compliance with laws and regulations.

Software

HBME staff utilizes progressive and effective software to streamline the audit process and make it as efficient as possible. The major software products we utilize include:

- **CCH Prosystems Engagement** - Software to facilitate the preparation of audit adjustments and financial statements in a paperless format.
- **Microsoft Excel** - Software to prepare audit workpapers and schedules.
- **Microsoft Word** - Software to generate audit memos, audit correspondence and audit workpapers.
- **CCH Accounting Research Manager** - Internet access of all accounting and auditing standards. Areas include GASB, FASB, AICPA, and other resource material. We can access this material at any given time and can provide a quick response to any technical questions you may have.

Through the use of our Electronic Data Processing (EDP) software, our audit approach delivers an effective and efficient use of time. We have found that we can achieve this objective by obtaining various reports from the EDP system. During the planning phase, we will review your EDP software to determine control features. Our audit procedures will test these features. We will also meet with your information technology staff to identify the ability of your EDP system to generate reports and information, which we can use throughout the audit to supplement or replace other audit procedures. Potential data to be downloaded from the City's server includes trial balances, disbursement ledgers and payroll ledgers.

Analytical Procedures

HBME will apply analytical procedures throughout general planning to improve our understanding of your operations and to identify audit areas for increased attention. These will be applied to assist in planning the nature, timing and extent of other procedures. They will be applied to all balance sheet, revenue/receipt and expense/expenditure areas. These procedures include, but are not limited to, the comparison of current year to prior year and budget amounts. Areas that show results different from those anticipated or planned will be further investigated to determine the validity of the variance.

Audit Hour Estimates

Providing our clients with effective and efficient audits services is very important to us. We recognize the importance of ensuring our audit team is assigned to each audit area, based on our risk-based approach. The estimated hours, by staff level, is determined by the partner and managers during the planning phase, and is monitored throughout all phases of the audit engagement. Refer to these estimates on page 22, *Proposed Audit Fees*.

SPECIFIC AUDIT APPROACH

Client Responsibilities

The following represents the type of information we request during the audit process:

- Reconciliations of detailed subsidiary ledgers to the general ledger
- Analysis of account balances
- Provide documentation to support balances and transactions
- Preparation of confirmations and internal control and other questionnaires
- Prepare financial statements

Audit Objectives

The primary objective of our audit procedures is to enable us to issue opinions on the City's financial statements.

A. Our audit procedures are conducted in accordance with auditing standards generally accepted in the United States of American and *Government Auditing Standards* and will include tests of accounting records and other procedures considered necessary to enable the expression of such an opinion.

B. Our audit procedures are designed to obtain reasonable assurance about whether the financial statements are free of material misstatement using accounting principles generally accepted in the United States of America.

C. The audit procedures include examining, on a test basis, evidence supporting the amounts and disclosures in the financial statements. The audit procedures also include discussions with management, an assessment of the quality of the accounting principles used and significant estimates made, as well as evaluating the overall consistency of the financial statements and related disclosures.

D. The audit procedures also include, when required, testing compliance with the OMB Circular A-133 Compliance Supplement (changing to Subpart F of the new Omnibus) and other federal grant requirements. We will obtain evidence supporting the related revenues and expenditures, and disclosures in the financial statements.

Management Letter Reporting and Communications

There are many ways to say the same thing. We understand that our job is to communicate information to you, regardless of its nature. To build a better client experience, we focus on employing communication styles that are collaborative rather than combative. By keeping our communication positive, friendly and open, we believe we can create positive discussions with our clients.

As we identify issues during the audit, we focus on communicating information as early as possible, which results in concluding the audits without springing surprises on our clients at the end of the process. By keeping the lines of communication open at all times and properly planning the audit, we are able to keep the process moving in an efficient manner.

SPECIFIC AUDIT APPROACH

Planning

During this phase, we determine the timing of the various procedures, complete logistical arrangements, arrange for assistance to be provided by personnel from the City, and prepare the audit work programs. We believe the planning component is important to the process as it helps properly address changes and concerns prior to commencement of the audit field work. For this reason, we spend a significant amount of our time in the planning phase. We will also complete a risk analysis, develop a better understanding of the City, perform preliminary review procedures, and assess fraud risk factors in accordance with SAS 99 as well as SAS 104-111. In addition, we will perform selected compliance testing and fraud risk documentation.

The following outline summarizes the elements of the planning phase:

1. Assess Risk

   a. The partners and managers review and identify estimates to determine areas of risk in relation to the financial statements.
   b. Management override of internal control can significantly impact the financial reporting process. We consider this in our planning and timing of procedures for the City.

2. Identify Issues

   c. During the planning phase, we will also have pre-engagement planning discussions with the City's management to discuss accounting issues, changes in the financial statements, and other issues affecting the audit process.
   d. Our audit team will review interim financial statements. This review provides us with information necessary to help plan our audit and develop questions.

3. Document Systems

   Through discussions held with personnel from the City and the completion of various questionnaires, we develop an understanding of your financial reporting process and internal controls. We reassess the procedures and controls annually and appropriately plan the audit to address any concerns. We address any concerns identified in connection with this review in our letter of comments to the City Commission.

4. Consideration of Fraud

   Auditors have a responsibility to plan and perform the audit to obtain reasonable assurance about whether the financial statements are free of material misstatement, whether caused by error or fraud (SAS 99). HBME's audit approach has historically addressed many of these issues in accordance with our internal policies. The recent changes have primarily required us to change our documentation policies regarding fraud risk factors and our response to those factors.

5. Tailor Audit Approach

   After considering the above factors, we design audit procedures to address changes and difficult areas. Examples include using data extraction software to analyze various accounts and transactions.

Preparing/Internal Control

During this phase, we will review the internal control systems for the City and review Commission minutes. We will also review agreements entered into during the current year. In addition, we will perform some preliminary substantive procedures.

The following outline summarizes the elements of the preparing phase:

1. Communicate Expectations

   We will set audit fieldwork time frames for both interim and year-end testing. We will communicate regularly with City personnel and audit committee members throughout the audit process.

2. Conduct Preliminary Analytical Review

   Our audit team will review interim financial statements to identify significant or unusual variances from the prior year and from the budget. This information will be used to formulate expectations and will also be used in the fraud risk analysis.

3. Tailor Data and Schedule Requests

   We will coordinate information requests and timing of our onsite work with management and make arrangements to meet with personnel from the City involved in the audit.

4. Select Samples and Set Scopes

   We will begin making sample selections from preliminary financial information to distribute time requirements of personnel from the City during the audit process.

Conducting/Fieldwork

This phase of the audit includes the primary portion of the substantive testing of the financial statements. This testing includes confirming certain accounts and transactions, vouching selected transactions to source documents, analyzing account balances, making inquiries of management and others, and conducting an analytical review of various account balances and the financial statements.

All of our partners and managers have extensive experience with yellow book audits, including drafting financial statements with GASB 34 adjusting entries. We currently draft or assist in drafting CAFRS for many of our clients. We also have significant experience with OMB Subpart F Single Audits for some of our City and non-profit clients. We are also aware of the changes which eliminate the OMB Circular A-133 and establish the OMB Subpart F of the new Omnibus and are educating our personnel with these changes. The Omnibus is effective for fiscal year 2016.

SPECIFIC AUDIT APPROACH

The following outline summarizes the elements of the conducting phase planned for our audit of the City:

1. Risk-Based Approach

   During fieldwork, we continually reevaluate the risk factors identified during the Planning and Preparing Stages. As we will have a partner and a manager on site, we are able to quickly respond to changes and make the necessary modifications in our audit approach.

2. Tests of Balances and Transactions

   - Utilize computer assisted auditing tools in sampling accounts receivable and account payable transactions, in the review of general journal entries, and the identification of significant or unusual transactions in specific accounts.
   - Vouch to source documents for selected items.
   - Review activity subsequent to year-end (to substantiate cut-off as well as substantiate liabilities).
   - Confirm balances with external sources, such as financial institutions, investment managers and actuaries.
   - Determine proper GASB 40 classifications for the investments.
   - Determine proper GASB 63 and 65 compliance for deferred outflows, deferred inflows, and net position.
   - Work with City to determine and provide a schedule of when all functions of the City will be audited during the five year contract (based on need and risk assessment).
   - We don't plan to use specialists, unless needed for tasks such as arbitrage rebate calculations.

3. Compliance

   We review federal and state statutes to ensure they are being met.

4. Review Estimates

   Accounting estimates are an integral part of the financial statements prepared by management and are based on management's knowledge and experience about past and current events and assumptions about future events. Certain accounting estimates are particularly sensitive because of their significance to the financial statements and because of the possibility that future events affecting them may differ significantly from those expected.

5. Final Analytical Procedures

   We will compare financial statement line items for the current, preceding period and budget amount, analyze the results, and inquire of management and others within the City regarding significant changes. We will also consider whether sufficient audit evidence has been obtained in response to unusual or unexpected balances or relationships. In addition, we will consider whether responses to inquiries throughout the audit about analytical relationships have been vague or implausible or have produced evidence that is inconsistent with other evidential matter accumulated during the audit.

6. Review of Working Papers and Financial Statements

   The partner and managers will review the working papers. We believe it is important to complete the majority of the working paper reviews in the field to omit the number of phone calls back to your staff and reduce interruptions. In addition to the review conducted by these individuals, the financial statements will be reviewed by a partner not otherwise associated with the audit of the City to obtain a second opinion on the completeness and adequacy of financial statement disclosures and audit procedures.

7. Hold Exit Conference with Management to Discuss Findings and Reports

   This meeting generally occurs on the last day of fieldwork.

Reporting

We will issue the audit reports and other letters to the City's Council, and will present these reports to the Council at their regularly scheduled meeting. Our comments will address the City's significant accounting policies, management's judgments and estimates related to the financial statements, and other items related to the conduct of the audit. If our audit procedures disclose the existence of reportable conditions or other matters that we feel should be communicated, we will report those items to the City Council.

PROPOSED AUDIT SCHEDULE

We sincerely pride ourselves at HBME of never missing a deadline. We will always ensure that hard deadlines with the State, Federal Government, or any other entity will be met. We will also ensure that the City is aware of the deadlines, so that we can work together to be 100% compliant. Our firm has never missed a reporting deadline as required by State and Federal laws.

The following is our proposed schedule for completing the 2016 audit:

Audit Function	Approximate Dates
Pre-audit conference	June 22 - 30
Review, evaluation and testing of internal control structure, preparation of audit programs, and interim auditing procedures, including state compliance testing	July 1 - 15
Confirmations sent on cash accounts, receivables, bonds and other debt, tax revenues, State Retirement System, etc.	July 1 – 15
Complete interim auditing procedures, year-end financial and compliance auditing procedures, including single audit, if applicable	October – November
Preparation of the CAFR by the City, review of CAFR by HBME, preparation of State and Yellow Book reports by HBME, including management letters	November
Closing conference with City Council	December

PROPOSED AUDIT FEES

Our fees are based on the estimated hours required of our professional staff at all levels, estimated hours required of our support staff, and out-of-pocket expenses. The schedule below contains our estimates of the hours required and the proposed audit fees for 2016 through 2020. The fees quoted are a not to exceed fee for the services contained in our proposal, and includes our out-of-pocket expenses.

Year Ended	Estimated Hours	Fee
June 30, 2016	180	$ 9,000
June 30, 2017	180	18,000
June 30, 2018	180	18,000
June 30, 2019	180	18,500
June 30, 2020	180	19,000
		$ 82,500

The fees for the 2016 audit, were determined based on the following rates:

Classification	Discounted Hourly Rates	Estimated Hours	Total Fees
Partners	$ 200	20	$ 4,000
Principal/Manager	150	60	9,000
Senior Staff	105	50	5,250
Staff Auditors	85	50	4,250
		180	$ 22,500

The proposed fees for 2016 reflect the following adjustments:

Total professional fees at discounted rates	$ 22,500
Additional loyalty discount	(13,500)
Proposed total cost of the 2016 audit	$ 9,000

The above fees are based on the nature of the City as it presently exists, and are also based upon our understanding that your personnel will provide certain schedules and other information on a timely basis that will be required during the course of the audit. The 2016 reduced fee represents an expression of our appreciation for the City using our firm for the last several years, and is contingent on serving as City auditors for at least three more years.

Our discounted hourly rates, as stated above, will be used for consulting and non-audit services that may be requested.

Entity	Business	Person(s) to Contact	Phone #	Email
Logan City	Government	Richard Anderson, Finance Director	435-716-9180	randerson@loganutah.org
Riverton City	Government	Lisa Dudley, Administrative Service Director	801-208-3134	ldudley@rivertoncity.com
Layton City	Government	Tracy Probert, Finance Director	801-336-3881	tprobert@laytoncity.org
Draper City	Government	Bob Wylie, Finance Director	801-576-6318	bob.wylie@draper.ut.us
Herriman City	Government	Alan Rae, Finance Director	801-727-0956	arae@herriman.org
Bluffdale City	Government	Dave Sanderson, Finance Director	801-571-3991	dave@dsaccounting.net
Taylorsville City	Government	Scott Harrington, CFO/Asst City Mgr	801-955-2004	sharrington@taylorsvilleut.gov
Midvale City	Government	Laurie Harvey, Finance Director	801-567-7238	laurie@midvale.com
Provo City	Government	John Borget, Finance Director	801-852-6504	jborget@provo.utah.gov
Kaysville City	Government	Dean Storey, Finance Director	801-546-1235	dstorey@kaysvillecity.com

WIGGINS & CO. P.C.
CERTIFIED PUBLIC ACCOUNTANTS

System Review Report

January 15, 2015

Hansen, Bradshaw, Malmrose & Erickson
And the Peer Review Committee of the Nevada Society of Certified Public Accountants

We have reviewed the system of quality control for the accounting and auditing practice of Hansen, Bradshaw, Malmrose & Erickson (the firm) in effect for the year ended August 31, 2014. Our peer review was conducted in accordance with the Standards for Performing and Reporting on Peer Reviews established by the Peer Review Board of the American Institute of Certified Public Accountants. As a part of our review, we considered reviews by regulatory entities, if applicable, in determining the nature and extent of our procedures. The firm is responsible for designing a system of quality control and complying with it to provide the firm with reasonable assurance of performing and reporting in conformity with applicable professional standards in all material respects. Our responsibility is to express an opinion on the design of the system of quality control and the firm's compliance therewith based on our review. The nature, objectives, scope, limitations of, and the procedures performed in a System Review are described in the standards at www.aicpa.org/prsummary.

As required by standards, engagements selected for review included engagements performed under *Government Auditing Standards;* audits of employee benefit plans, and an examination of a service organization (Service Organizations Control (SOC 1)) engagement.

In our opinion, the system of quality control for the accounting and auditing practice of Hansen, Bradshaw, Malmrose & Erickson in effect for the year ended August 31, 2014, has been suitably designed and complied with to provide the firm with reasonable assurance of performing and reporting in conformity with applicable professional standards in all material respects. Firms can receive a rating of *pass, pass with deficiencies,* or *fail.* Hansen, Bradshaw, Malmrose & Erickson has received a peer review rating of *pass*.

Wiggins & Co., PC

Wiggins & Co., PC

P.O. DRAWER 577 • 205 NORTH MAIN
BRIGHAM CITY, UTAH 84302 • (435) 723-8563 • FAX (435) 723-8565

PROPOSAL TO PROVIDE AUDIT SERVICES

FOR

CENTERVILLE CITY, UTAH

FOR THE YEARS ENDED

JUNE 30, 2016 THROUGH JUNE 30, 2020

K&C

Keddington & Christensen, LLC
Certified Public Accountants

PROPOSAL TO PROVIDE AUDIT SERVICES

FOR

CENTERVILLE CITY, UTAH

FOR THE YEARS ENDED

JUNE 30, 2016 THROUGH JUNE 30, 2020

K&C

Keddington & Christensen, LLC
Certified Public Accountants

Gary K. Keddington, CPA
Phyl R. Warnock, CPA
Marcus K. Arbuckle, CPA

March 23, 2016

Members of the City Council and Mayor of
Centerville City, Utah

We are thrilled to provide this proposal for your consideration! We have read your request for proposal for professional auditing services, and we believe we have the necessary skills and experience to provide Centerville City with the financial audit services it requires. As you will see later on in this proposal, we have extensive experience in governmental auditing, in fact, approximately 80% of our clients are governmental entities of one type or another, whether they be cities, special districts, or interlocal entities. Our firm is dedicated to providing quality audit services at a fair and reasonable price.

Some benefits of working with our firm are: partners and managers over the engagement are in the field with the staff, our staff are highly cross-trained, and we don't charge for phone calls.

With the partner and managers in the field overseeing the audit, any significant decisions, questions, issues, or concerns related to the audit are usually handled right there at the client's office as they arise. This ensures that the audit work continues as seamless as possible and any questions or concerns from the client can be resolved as quickly as possible.

Another aspect that we pride ourselves in is having our staff highly cross-trained. Part of our practice consists of providing CFO and consulting services to several cities and districts throughout the state of Utah. These services consist of continual reviews of financial information, budget preparation, audit preparation services, and many others. Even our newest staff participate in the reconciliation and reporting services that we provide to these consulting entities. Also, our training and continuing education programs exceed the minimum requirements for auditors of governmental entities, and CPA licensure requirements.

The third benefit we mentioned was not charging for phone calls. This concept may seem simple and "common sense", however, we noticed that many of our clients were hesitant to contact their former auditors because they were always charged for every minute of every phone call. We believe that type of practice to be a disservice to our clients. We prefer to have open communication with our clients so that issues, concerns, or questions can be resolved throughout the year as they arise, instead of becoming potentially bigger issues after year end when reporting deadlines are looming.

Those are just some of the benefits you can expect from working with Keddington & Christensen. Again, we are excited for this opportunity and look forward to hearing from you.

Sincerely,

Keddington & Christensen, LLC

Keddington & Christensen, LLC

Telephone (801) 590-2600
Fax (801) 265-9405

1455 West 2200 South, Suite 201
Salt Lake City, Utah 84119

TABLE OF CONTENTS

A: Profile of the Independent Auditor 1

B: Proposer's Qualifications 1

C: Proposer's Approach to the Examination 9

D: Fees 11

E: Non-Discrimination Clause 11

A: PROFILE OF THE INDEPENDENT AUDITOR

1. Location, Size and Staff by Level

KCHM, LLC, dba Keddington & Christensen is a limited liability company, operating primarily in the Utah area. Our offices are located at 1455 West 2200 South, Suite 201, in Salt Lake City, Utah. We currently have three partners, three managers, and six professional and support staff. All of our partners and professionals have experience in performing governmental audits. We currently have six licensed CPAs. Our partners, managers and staff have always emphasized the need for prompt responses to our clients' needs in achieving their goals and objectives. We have structured our firm in a way that allows our clients easy access to the partner or manager responsible for their engagement.

2. Proposer's Staff

It is Keddington & Christensen's policy to seek out employees who demonstrate a commitment to quality and are candidates for the CPA license. We recruit talented individuals from a variety of colleges and universities who have Master's degrees in Accountancy. Occasionally, we will hire individuals who determined to be a good fit for the firm while they are still in pursuit of their Master's degree. We have a system of quality control in place to ensure that our work meets the professional standards of our industry.

Our firm has historically experienced very low turnover. Where possible, we staff our engagements with the same team each year. We are committed to providing the necessary training to our staff in order to provide the best service to our clients. We do not depend on our clients to "train" our staff in accounting and auditing.

3. Affirmative Statements

a) We affirm that we are properly licensed to practice as a certified public accountants in the State of Utah.
b) We affirm that we are independent of the City as defined by the AICPA's Rule 101 and *Government Auditing Standards*.
c) We affirm that we meet the continuing professional education and external quality control review requirements contained in the *Government Auditing Standards*.

B: PROPOSER'S QUALIFICATIONS

1. Resumes and Qualifications

Gary Keddington, CPA will be the partner with final responsibility of the audit. In addition to Gary, Marcus Arbuckle, CPA, will be the concurring partner. Angela Broadhead, CPA, will be the manager on this engagement. Other staff members that we anticipate playing a significant role in your engagement will include Cody Keddington and KathLynn Roundy. The resumes for those partners, manager, and staff are included below.

B: PROPOSER'S QUALIFICATIONS (Continued)

1. Resumes and Qualifications (Continued)

Gary Keddington, CPA – Partner

Mr. Keddington has been a resident of Bountiful for over 40 years and has been performing governmental auditing and consulting services for over 29 years. He received his degree in Accounting from the University of Utah in 1983. Prior to joining Keddington & Christensen (formerly Jensen & Keddington) in January of 1985, Mr. Keddington worked for a Utah based regional certified public accounting firm. Mr. Keddington became a partner in the firm in January 1989.

Mr. Keddington is a member of the UGFOA, AICPA and the UACPA. Currently Mr. Keddington is the outside consulting Finance Director for Manti City, Gunnison City, Moroni City, and Centerfield City; and serves on the Board of Directors for the Bountiful Irrigation District. Mr. Keddington has attended continuing education related to Government Auditing including courses and conferences offered by the Utah State Auditor's office, UGFOA, GFOA, and UACPA.

Certificate of Educational Achievement

Mr. Keddington has also received the Certificate of Educational Achievement for Governmental Accounting and Auditing issued by the American Institute of Certified Public Accountants (AICPA). This certificate represents that the recipient has taken an extensive course sponsored by the AICPA regarding governmental accounting and auditing. The recipient must also take and pass four different examinations regarding governmental accounting and auditing.

The following is a list of some of the governmental and related engagements for which Mr. Keddington was the primary partner, all of which are current or recent clients within the last two years:

- Bountiful City
- Lindon City
- Washington Terrace City
- Syracuse City
- Manti City
- Gunnison City
- Moroni City
- Centerfield City
- Grantsville City
- Utah Transit Authority
- UTOPIA
- UIA
- Magna Water District
- Timberlakes Special Service District
- South Valley Water Reclamation Facility
- South Valley Sewer District
- Carbon Water Conservancy District
- North Sanpete Ambulance Service District
- Utah Municipal Clerks Association
- Wasatch Front Waste and Recycling

B: PROPOSER'S QUALIFICATIONS (Continued)

1. **Resumes and Qualifications (Continued)**

Marcus Arbuckle, CPA – Concurring Audit Partner
Mr. Arbuckle has been a resident of Centerville City for over 30 years and has been performing governmental auditing and consulting services for over 8 years. He graduated with a degree in Accounting in 2004 from Utah Valley University and with a Masters of Business Administration in 2007 from the University of Utah. Mr. Arbuckle joined Keddington & Christensen (formerly Jensen & Keddington) in 2007 and was promoted to partner in 2014. Mr. Arbuckle specializes in performing audit services to a variety of clients including municipalities, other governmental entities, non-profit and commercial entities.

Prior to joining Keddington & Christensen Mr. Arbuckle was employed by South Jordan City for over two years. As a member of the South Jordan City Finance Department, Mr. Arbuckle worked closely with the Chief Accountant in assisting with the City's Comprehensive Annual Financial Report. Mr. Arbuckle was responsible for the statistical section of the City's Comprehensive Annual Financial Report. Mr. Arbuckle was also responsible for tracking and recording the City's revenue through month and year end journal entries. Mr. Arbuckle was a member of the city's budget committee established to forecast revenues and prepare budgets.

Mr. Arbuckle is licensed as a CPA in Utah. He has attended continuing education for the past eight years related to auditing governmental entities and audits in accordance with the Single Audit Act offered by the Utah State Auditor's office, the GFOA and the UACPA. He is also a member of UGFOA, UACPA and the AICPA.

The following is a list of some of the governmental and related engagements for which Mr. Arbuckle was the primary partner, all of which are current or recent clients within the last two years:

- West Jordan City
- Orem City
- South Ogden City
- Woods Cross City
- Toquerville City
- Somerton City, Arizona
- South Davis Metro Fire Agency
- Unified Fire Authority
- Unified Fire Service Area

Angela Broadhead, CPA – Audit Manager
Ms. Broadhead graduated with a B.S. degree in Accounting in 2005 from Southern Utah University and received a Masters of Accounting degree and an MBA from Southern Utah University in 2009. While attending Southern Utah University she was recognized as the Outstanding Scholar (2005) and Outstanding Graduate Student (2009).

Ms. Broadhead joined Keddington & Christensen (formerly Jensen & Keddington) in 2009 where she has acquired a variety of experience in public accounting performing audit services to a variety of clients, including both governmental and commercial entities. In 2014, she was promoted to audit manager. Ms. Broadhead is licensed as a CPA in Utah. She has attended continuing education related to auditing governmental entities and audits in accordance with the Single Audit act offered by the Utah State Auditor's Office, the GFOA, and the UACPA.

B: PROPOSER'S QUALIFICATIONS (Continued)

1. **Resumes and Qualifications (Continued)**

Angela Broadhead, CPA – Audit Manager (Continued)
The following is a list of some of the governmental audits for which Ms. Broadhead manages the audit process:

- Lindon City
- West Valley City
- UTOPIA
- UIA
- Lone Peak Public Safety District
- Metropolitan Water District of Salt Lake and Sandy
- South Salt Lake Valley Mosquito Abatement District
- UTOPIA & UIA
- Utah State Office of Education –program specific audits
- Washington State Office of Superintendent of Public Institutions – program specific audits, Single Audits
- Idaho State Department of Education – program specific audits

Cody Keddington – Staff
Mr. Keddington graduated with a bachelor's degree in Accounting in 2013 from University of Utah. Mr. Keddington then went on to earn a Masters of Accounting in 2014 from University of Utah. Mr. Keddington joined the Firm in May 2014. He has also taught accounting as an adjunct professor at the University of Utah for the past year.

Mr. Keddington has attended continuing education related to auditing governmental entities offered by the Utah State Auditor's office, and the UACPA; as well as various in-house continuing education trainings.

The following is a list of some of the governmental and related engagements for which Mr. Keddington has worked on in the last two years:

- Bountiful City
- South Ogden City
- West Valley City
- West Jordan City
- Woods Cross City
- Lindon City
- Murray City
- Orem City
- Highland City
- Syracuse City
- Toquerville City
- South Davis Metro Fire Agency
- South Valley Sewer District
- South Valley Water Reclamation Facility
- Lone Peak Public Safety District
- Uintah Rec District
- Granger Hunter Improvement District
- Midvalley Improvement District
- Utah State Office of Education – program specific audits

B: PROPOSER'S QUALIFICATIONS (Continued)

1. Resumes and Qualifications (Continued)

KathLynn Roundy – Staff
Ms. Roundy graduated with a bachelor's degree in Accounting in 2013 from Southern Utah University. Ms. Roundy went on to earn a Masters of Accounting in 2014 from Southern Utah University. Ms. Roundy joined the firm in August of 2014. Ms. Roundy has attended continuing education related to auditing governmental entities and audits in accordance with the Single Audit Act offered by the Utah State Auditor's office, and the UACPA; as well as various in-house continuing education trainings.

The following is a list of some of the governmental and related engagements Ms. Roundy has worked on in the last two years:

- Bountiful City
- West Valley City
- West Jordan City
- South Ogden City
- Washington Terrace City
- Woods Cross City
- Cedar Hills City
- Utah Transit Authority
- South Valley Water Reclamation Facility
- Wasatch Front Waste and Recycling
- Uintah Rec District
- South Salt Lake Valley Mosquito Abatement District
- Granger Hunter Improvement District
- UTOPIA
- UIA
- Utah State Office of Education – program specific audits

2. Recent Relevant Audit Experience

As you may be aware, the personnel of Keddington & Christensen have performed services for over 29 years for cities, special districts and other governmental entities. We have been providing services to many of our clients for 10 years or more. We attribute this kind of loyalty to the personal, yet professional, service we provide. Often we hear from clients about what a please it has been to work with us and how helpful and quick we are to respond to questions or concerns that arise during the audit.

Below is a list of our more recent experience (within the last seven years) related to governmental clients. We encourage you to contact any one of our clients to get an idea of the level of service you can expect from us.

Bountiful City –CAFR audits from 2002 to present, including audit of Redevelopment Agency, Power, Water, Sewer, Stormwater, Capital Projects, and Special Revenue funds

Contact person: Tyson Beck, Finance Director – (801) 955-2253

West Valley City –CAFR audits and Single Audits from 2000 to present, including audit of Redevelopment Agency, Water, Sewer, and Stormwater, Capital
Projects, Ambulance, and Special Revenue funds

Contact person: Jim Welch, Finance Director – (801) 963-3235

B: PROPOSER'S QUALIFICATIONS (Continued)

2. **Recent Relevant Audit Experience (Continued)**

Draper City –CAFR audits from 2008 – 2013, including audit of Redevelopment Agency, Capital Projects, Water, Sewer, and Stormwater funds

Contact person: Danyce Steck, Finance Director (until May 2013) – (801) 287-2380.
*Note: Currently Danyce is the Comptroller for **Utah Transit Authority**.*

Murray City –CAFR audits and Single Audits from 2013 to present, including audit of Redevelopment Agency, Power, Water, Sewer, Stormwater, Capital Projects, and Special Revenue funds

Contact person: Justin Zollinger, Finance Director – (801) 264-2669

West Jordan City – CAFR audits and Single Audits from 2010 to present, including audit of Redevelopment Agency, Water, Sewer, Stormwater, Capital Projects, Ambulance, Special Revenue, and Internal Service funds

Contact person: Ryan Bradshaw, Finance Manager – (801) 569-5021

Orem City – CAFR audits and Single Audits for fiscal years 2010 – 2014, including audit of Redevelopment Agency, Water, Sewer, Stormwater, Capital Projects, Ambulance, Special Revenue, and Internal Service funds

Contact person: Brandon Nelson, Accounting Division Manager – (801) 229-7010

Riverton City – CAFR audits for fiscal years 2007 – 2011, including audit of Redevelopment Agency, Capital Projects, Special Revenue, Water, Sewer, and Stormwater funds

Contact person: Lisa Dudley, Finance Director – (801) 208-3134

South Ogden City - financial statement audits since 2011, including audit of Redevelopment Agency, Capital Projects, Special Revenue, Water, Sewer, and Stormwater funds

Contact person: Steve Liebersbach - Finance Director 801 622-2703

Woods Cross City - We have audited Woods Cross City's Financial Statements since 2012, including audit of Redevelopment Agency, Capital Projects, Water, Sewer, and Stormwater funds

Contact person: Gary Uresk, City Manager – (801) 292-4421

Washington Terrace City – CAFR audits since 2014, including audit of Redevelopment Agency, Capital Projects, Water, Sewer, and Stormwater funds

Contact person: Shari Garrett, Finance Director – (801) 395-8284

Syracuse City – CAFR audits from 2014 to present, including audit of Redevelopment Agency, Capital Projects, Water, Sewer, and Stormwater funds

Contact person: Stephen Marshall, Finance Director – (801) 825-1477

Lindon City – CAFR audits from 2013 to present, including audit of Redevelopment Agency, Capital Projects, Water, Sewer, and Stormwater funds

Contact person: Kristen Colson, Finance Director – (801) 785-5043

B: PROPOSER'S QUALIFICATIONS (Continued)

2. **Recent Relevant Audit Experience (Continued)**

Highland City – financial statement audits from 2010 to present, including audit of Capital Projects, Water, Sewer, and Stormwater funds

Contact person: Gary LeCheminant, Finance Director – (801) 772-4520

Toquerville City – financial statement audits from 2012 to present, including audit of Water and Sanitation funds

Contact person: June Jeffrey, Treasurer – (435) 635-1094

UTOPIA and UIA – financial statements audits and Single Audits from 2005 to present for UTOPIA and from 2011 to present for UIA

Contact person: Kirt Sudweeks, Controller – (801) 613-3859

Utah Transit Authority – financial statement audits beginning 2015

Contact person: Danyce Steck, Finance Director – (801) 287-2380

South Valley Sewer District – financial statement audits from 2002 to present

Contact person: Craig White, General Manager – (801) 571-1166

Granger Hunter Improvement District - financial statement audits from 2014 to present

Contact person: Kim Coleman, Controller – (801) 968-3551

Midvalley Improvement District - financial statement audits from 2005 to present

Contact person: Brent Christensen, Finance Director – (801) 255-7321

Magna Water District – financial statement audits from 2014 to present

Contact person: Randall Jones, General Manager – (435) 882-6188

Timberlakes Special Service District – financial statement audits from 2014 to present.

Contact person: Jody Defa, Manager – (801) 420-1186

Wasatch Front Waste and Recycling – financial statement audits beginning 2015.

Contact person: Stuart Palmer, Controller – (385) 468-6325

Wasatch Integrated Waste Management – financial statement audits beginning 2015

Contact person: David Van De Graff, Controller – (801) 614-5602

Metropolitan Water District of Salt Lake & Sandy – financial statement audits from 2011 to present

Contact person: Mike Wilson, District Manager – (801) 942-9685

B: PROPOSER'S QUALIFICATIONS (Continued)

2. **Recent Relevant Audit Experience (Continued)**

South Salt Lake Valley Mosquito Abatement District – financial statement audits from 2010 to 2015

Contact person: Kassie Draper, Office Manager – (801) 255-4651 ext. 103

Uintah Recreation District – financial statement audits from 2008 to present

Contact person: Robin O'Driscoll, Executive Director – (435) 781-0982

Stansbury Service Agency – financial statement audits from 2010 to present

Contact person: Randall Jones, General Manager – (435) 882-6188

South Valley Water Reclamation Facility – financial statement audits from 2006 to present.

Contact person: Gary Dunn, Finance Director – (801) 495-5444

Unified Fire Authority - We have audited Unified Fire Authority's financial statements from 2010 to present.

Contact person: Kate Turnbaugh – Senior Accountant – (385) 468-9063.

Unified Fire Service Area - financial statement audits from 2013 to present.

Contact person: Kate Turnbaugh – Senior Accountant – (385) 468-9063

Lone Peak Public Safety District – financial statement audits from 2010 to present

Contact person: Gary LeCheminant, Finance Director – (801) 772-4520

North Sanpete Ambulance Service – financial statement audits from 2013 to present

Contact person: Carol Haskins, City Recorder – (435) 436-8359

Utah State Office of Education – program specific audits of the Child and Adult Care Food Program from 2001 to present

Contact person: Matt Anderson, CNP Director – (801) 538-7682

Washington State Office of Superintendent of Public Instruction – program specific audits of the Child and Adult Care Food Program as well as financial statement audit of a Sponsoring Organization from 2015 to present

Contact person: Sherry McCulloch, Audit Specialist – (360) 725-6287

Idaho State Department of Education – program specific audits of the Child and Adult Care Food Program from 2015 to present

Contact person: Kim Huntly, CACFP Coordinator – (208) 332-6935

Manti City – serving as Finance Director from 2005 to present.

Contact person: Kent Barton, City Administrator – (435) 835-2401

B: PROPOSER'S QUALIFICATIONS (Continued)

2. Recent Relevant Audit Experience (Continued)

Moroni City – serving as Finance Director from 2008 to present

Contact person: Carol Haskins, City Recorder – (435) 436-8359

Gunnison City – serving as Finance Director since 2010.

Contact person: Janell Braithwaite, City Recorder – (435) 528-7969

Grantsville City - accounting and audit preparation services from 2012 to present

Contact person: Sherrie Broadbent, Finance Director – (435) 884-3411

Centerfield City - accounting and audit preparation services from 2015 to present

Contact person: Tammy Winegar, City Recorder – (435) 528-3296

Somerton City (AZ) - accounting and audit preparation services from 2015 to present.

Contact person: Bill Lee, City Manager – (928) 722-7343

North Salt Lake City - accounting and audit preparation services from 2012 to 2014

Contact person: Janice Larsen, Finance Director – (801) 335-8708

South Davis Metro Fire Agency – serving as Finance Director from 2013 to present

Contact person: Jeff Bassett, Fire Chief – (801) 677-2400

3. Other Auditors

As can be seen in this proposal, we have enough qualified and trained personnel in our office to accomplish the requested audit in a timely manner. We will not use any sub-contractors, specialists, students, or interns, or staff from other firms for the performance of this audit.

C: PROPOSER'S APPROACH TO THE EXAMINATION

Scope and Objective

We will audit the basic financial statements of the City as of June 30, 2016, and each subsequent year up through June 30, 2020. Our audit will be conducted in accordance with auditing standards generally accepted in the United States of America and the standards for financial audits contained in *Government Auditing Standards*, issued by the Comptroller General of the United States, and will include tests of the accounting records of the City and other procedures we consider necessary to enable us to express such an opinion.

We will provide a report (that does not include an opinion) on internal control related to the financial statements and compliance with laws, regulations, and the provisions of contracts or grant agreements, noncompliance with which could have a material effect on the financial statements as required by *Government Auditing Standards*.

C: PROPOSER'S APPROACH TO THE EXAMINATION (Continued)

We will perform audit procedures as outlined by the Utah State Auditor's Office State of Utah Compliance Audit Guide and issue the appropriate reports and opinions.

Audit Procedures
Our audit includes examining, on a test basis, evidence supporting the amounts and disclosures in the financial statements; therefore, our audit will involve judgment about the number of transactions to be examined and the areas to be tested. We will plan and perform the audit to obtain reasonable rather than absolute assurance about whether the financial statements are free of material misstatement, whether from (1) errors, (2) fraudulent financial reporting, (3) misappropriation of assets, or (4) violations of laws or governmental regulations that are attributable to the entity or to acts by management or employees acting on behalf of the entity.

Our procedures will include tests of documentary evidence supporting the transactions recorded in the accounts, and may include tests of the physical existence of inventories, and direct confirmation of receivables and certain other assets and liabilities by correspondence with selected individuals, creditors, and financial institutions.

A successful audit provides the highest level of assurance on the reliability of the financial statements. Our audit approach also takes a businessperson's perspective to the examination of the financial statements. We pride ourselves on being available to our clients throughout the year so we can make helpful and profitable observations and suggestions to improve operating efficiencies and control structures.

Communications
During our audit, if we become aware of significant deficiencies or material weaknesses in the design or operation of the internal control structure, and ways that we believe management practices can be improved, we will communicate them to you in the form of a comprehensive written management letter at the conclusion of our audit. If, during the course of our audit, we suspect illegal acts or observe indications of illegal acts, we will report these to you immediately.

Time requirements
The following is a detail of how we anticipate accomplishing the audit and meeting the reporting deadlines requirements. In order to complete the project in a timely manner the City must have the records ready for audit in a timely manner, and as indicated below.

Entrance Conference	June
Interim Work General file procedures Documentation and testing of internal control and compliance required by *Government Auditing Standards.* Testing of Utah State Compliance Other non-accounting related audit procedures	June or July
City records ready for audit	October
Field Work – Performance of audit	October
Final Report – issued and ready	December
Exit Conference with the Administrative Control Board	December

D: FEES

Our fees for the proposed services for Centerville City will be $18,000 for the fiscal year ended June 30, 2016 and will remain unchanged for the succeeding four years. Not-to-exceed fees by year are shown in the table below. Included in our audit fee amount is all travel, per diem, and all other out-of-pocket expenses. Our fee amount is based on the current Finance Director, current key accounting personnel, the number of funds, the current auditing standards, the time requirements detailed in this proposal, and the accounting records being available to be audited prior to the audit field work each year.

	Not-to-Exceed Fee by Year				
	2016	**2017**	**2018**	**2019**	**2020**
Total Fee	$18,000	$18,000	$18,000	$18,000	$18,000

	Estimated Hours by Audit Area by Year				
	2016	**2017**	**2018**	**2019**	**2020**
Financial Statement Audit	210	210	210	210	210
State Compliance Audit	20	20	20	20	20
Total Hours	230	230	230	230	230

	Estimated Hours and Rates by Staff Level			
	Estimated Hours	**Standard Rate**	**Quoted Rate**	**Total Cost**
Partner	55	$ 190	$ 100	$ 5,500
Manager	75	135	80	6,000
Staff	100	90	65	6,500
Total Hours	230			$18,000

E: NON-DISCRIMINATION CLAUSE

Keddington & Christensen is an equal opportunity employer. Keddington & Christensen does not discriminate on the basis of race, religion, sex, color, age, handicap or national origin, and these are not factors in consideration for employment, selection for training, promotion, transfer, recruitment, rates of pay, or other forms of compensation, demotion or separation. We always seek to retain the most qualified personnel for our client base.

Centerville City

Proposal to Perform
Audit Services

For the Fiscal Year Ending
June 30, 2016

Centerville City
Proposal to Perform Audit Services
Table of Contents
June 30, 2016

Proposal Letter	2
Firm Profile	3
Audit Team - Professional Education	4
Audit Team	5
Scope of Services	6
Fees	7
Additional Work	7
Engagement Approach and Proposed Timing	8
Non-Discrimination Clause	8
Client List	9

Ulrich & Associates, PC

Certified Public Accountants

March 25, 2016

Centerville City
250 North Main
Centerville, Utah 84014-1824

Dear Centerville City Council Members,

As a firm, we appreciate and are excited about the opportunity to submit for your consideration our proposal to perform audit services for the fiscal year ending June 30, 2016.

Our belief is that not all audits are created equal. How they are conducted and by whom they are performed creates significant differences. At Ulrich & Associates, PC we perform high value audits. You are entitled to the peace of mind and assurance that comes from knowing the audit was done thoroughly, competently, and properly, thus protecting the City from unnecessary exposure to a variety of financial and public risks that are inherently part of the Council's fiduciary responsibility. The benefits you can expect to receive from a high value audit firm include the following:

1) A thorough and complete audit plan that will involve a risk based approach covering relevant aspects of your organization's financial reporting and internal control systems.
2) Execution of the audit plan by **experienced and well-trained** government financial auditors who know governmental fund accounting and are familiar with and know how to solve technical problems and issues.
3) Expert training for your accounting staff as the audit progresses, which means your personnel will learn best practice approaches and procedures for handling the financial transactions they face. Your staff will be more effective, more efficient, and more confident in their jobs.
4) Ongoing access to a team of experts to answer questions and provide support as the need arises.
5) Detailed recommendations to improve procedures and internal control systems that will reduce the risk of loss and the potential for public embarrassment.

In short, a high value audit will help preserve the financial health and credibility of your organization.

We invite you to check us out. Contact our clients. Investigate our track record. At Ulrich & Associates, PC we have specialized in performing audit services for government and nonprofit organizations for more than 20 years. This is what we do. We would be interested in serving as the auditors for Centerville City. Should you have any questions or concerns regarding the information contained in our proposal or need to make contact with our firm, please feel free to call me personally at 801-627-2100.

Michael Ulrich, CPA
Officer/Shareholder

FIRM PROFILE

Ulrich & Associates, P.C. is a local CPA firm with its office at 4991 S. Harrison Blvd. in Ogden, Utah. The firm emerged from an original sole-proprietorship which was started by Charles E. Ulrich, CPA, who, in 1986, branched out after having worked some 8 years with national and local CPA firms. As a result of opportunities to combine efforts with other CPAs, the firm grew into various entities, becoming Ulrich & Associates, P.C., Certified Public Accountants in 1994. In 1999, Michael Ulrich became an owner/shareholder in the firm. Recently, in 2013, Heather Christopherson became the third owner/shareholder in Ulrich & Associates, P.C. The firm now has five CPA's, two accountants, two para-professionals, and two administrative secretaries.

As evidenced by the client list attached, our firm specializes in government and non-profit accounting and auditing. We have enjoyed long and healthy relationships with many of these clients which we believe evidences our commitment to quality and professional service. As a firm, we have chosen to be selective in terms of the audit proposals we respond to. Centerville City represents a near ideal fit in terms of the types of audit clients we seek to obtain. The City's size, proximity, and level of sophistication match our firm's ability to provide the necessary expertise in a timely and professional manner. We are anxious to have the opportunity to work with Centerville City.

Our current clients use various accounting systems. Our audit procedures are designed to consider the processing aspects of such systems as well as the control environment used by respective clients to make changes, modify programs, or correct data. As such, we feel we are qualified to audit not only computerized accounting systems, but specifically the Caselle accounting system.

We affirm that we are licensed for practice as Certified Public Accountants in the State of Utah.

We affirm that we are independent with respect to Centerville City based on the requirements of the AICPA and the GAO's Government Auditing Standards, published by the U.S. General accounting office.

We affirm that we meet the continuing education requirements and external quality control review requirements contained in the GAO's *Government Auditing Standards* and OMB Circular A-133, *Audits of States, Local Governments, and Non-Profit Organization* .

We affirm that we have not received a fail designation from a review performed by the *Office of the Utah State Auditor.*

AUDIT TEAM - PROFESSIONAL EDUCATION

Our audit team training focuses entirely on government and nonprofit subjects. As such, each year we attend training on a variety of topics relevant to developments in the governmental sector. We also subscribe to various publications to keep us apprised of new pronouncements and standards that may be applicable to our clients. These items are reviewed on a regular basis as part of our ongoing effort to aid our existing and future clients.

- Annual Utah State Auditor's Office Conference
- Annual UACPA State & Local Government Conference
- Perfecting Analytical Procedures - PPC
- Staff Training - General Auditing Procedures - Level I - AICPA
- A-133 Single Audits in Governments and Nonprofits - AICPA
- Frauds in Governments and Nonprofits - PPC
- Government and Nonprofit Update - PPC
- Auditing Standards Annual Update - PPC

AUDIT TEAM

As a firm we understand the importance of providing one-on-one service. A close working relationship with each client has enabled us to meet more directly those needs unique to each situation. It is our commitment to personalized attention that has been the key to our success both individually and collectively. As you will note in this proposal, Centerville City would receive the benefit of this personalized attention and would have an owner directly involved in all phases of the audit.

The following individuals may be assigned to the audit:

Charles Ulrich, CPA	Audit Partner
Michael Ulrich, CPA	Audit Partner
Heather Christopherson, CPA	Audit Partner/ Manager
Kaela Cornwell, CPA	Senior Auditor
Michael Doxey, CPA	Staff Auditor

The following is a brief summary of the experience for each of the audit team members that would be assigned to the Centerville City audit. These auditors have had various levels of responsibility with each of the audits performed by Ulrich & Associates, PC as listed on the last page of this proposal. Each member of the audit staff has completed specific training courses that meet or exceed the new continuing education requirements under Yellow Book standards.

AUDIT TEAM - CONTINUED

Charles E. Ulrich, CPA graduated with a Bachelor's degree in accounting from Weber State College in 1979. He began his career with Fox & Company (now Grant Thornton), a nationally recognized CPA firm and at the time, the largest in Salt Lake City. His experience included numerous audits of government entities. In 1983, he joined the firm of Schmitt Griffiths Smith & Co. (now Eide Bailly) where he focused more specifically on the needs of governmental entities. In 1986, he started his own firm, again focusing on government auditing standards and techniques, servicing many municipalities. Through the years, his focus has remained on the needs of governmental units, having personally engaged in more than 500 government audits during his career.

Michael E. Ulrich, CPA graduated with a Bachelor's and Master's degree in accounting from Weber State University in 1991. He began his career with Tanner & Company, in Salt Lake City. His experience included numerous audits of public companies and government entities. He also worked a year for a private company as an assistant controller. In 1994 he joined Ulrich & Associates where he focused more specifically on the needs of governmental and non-profit audits. He has since been heavily involved in the conduct of hundreds of government audits including cities, counties and school districts. He is attentive to detail and provides effective analysis of critical audit issues.

Heather Christopherson, CPA graduated with a Master's degree in accounting from Weber State University in 2002 after having completed an undergraduate degree from the University of Montana in 2000. She began her accounting career with Galusha, Higgins, & Galusha in Montana and later moved to Utah and worked for Haynie & Company in Salt Lake. Her experience with these firms included audits of governmental entities. She joined Ulrich & Associates in 2003 and has continued to develop her expertise in the governmental arena. Her skills and expertise include proficiency in single audits; detailed knowledge of state legal compliance requirements; effective organization, communication and engagement management; and excellent problem solving abilities.

Kaela C Cornwell, CPA graduated with a Master's degree in taxation in 2012 and a Bachelor's degree in accounting in 2011, both from Weber State University. She began her accounting career with HJ & Associates in Salt Lake City working with taxes and accounting for small businesses. She joined Ulrich & Associates in 2013. She has been expanding her skills to include auditing of government and not-for-profit entities.

Michael Doxey, CPA graduated with a Master's degree in accounting from Utah State University in 2011. He began his accounting career with JD Clark in Ogden Utah, where his experience included financial statement accounting, audit preparation, and accounting for hedge funds and other derivative investments. He joined Ulrich Associates in 2014 and has developed his skills in audits of local governements and non-profit organizations, where his proficiency in technology and problem-solving have served client's well.

Based on the qualifications of our staff, we believe we have the experience and expertise necessary to complete the audit without the need for outside auditors or specialists.

SCOPE OF SERVICES

We will audit the financial statements of Centerville City for the fiscal year ended June 30, 2016, and will issue all associated audit reports. The audit will be performed in accordance with generally accepted auditing standards, as promulgated by the American Institute of Certified Public Accountants (AICPA); the AICPA Audits of State and Local Governmental Units Audit and Accounting Guide; and the Government Auditing Standards, published by the U.S. General Accounting Office.

We will assist Centerville City's Management with the preparation of the basic financial statements and all accompanying schedules.

We will examine the financial statements and records of Centerville City and will issue an auditors' opinion on the City's financial statements with an in-relation-to opinion on combining and supplementary information.

We will prepare and include a statement expressing positive assurance of compliance with State fiscal laws identified by the state auditor and other financial issues related to the expenditure of funds received from Federal, State, or local governments.

We will prepare a comprehensive management letter including our findings and recommendations relative to the internal accounting and administrative controls, compliance with laws and regulations as applicable and adherence to generally accepted accounting principles. This letter, in draft form, will be provided to management prior to the exit conference and presentation of the financial statements. In addition, as issues or concerns arise, we will discuss these issues with the responsible party and management. This discussion and subsequent corrective action plan will be acknowledged by all parties and documented as such.

We will require that management sign a management representation letter prior to the release of the audit report. This letter will detail the representations made by management. We will provide management with a draft of this letter at least one week prior to the release of the report. Any items that are unclear to management will be discussed and written more clearly prior to the signing of the document.

FEES

Our fee covers auditing the financial statements, including supplemental information and all footnote disclosures required by *Government Auditing Standards* .

Our fee proposal contemplates an estimated 140 billable hours for audit work and involves all out of pocket and travel expenses. To achieve this we anticipate hours and billing rates to be as follows:

	Bill Rate	Hours	
Audit Partner	$ 195	35	6,825
Audit Manager	$ 150	45	6,750
Staff Auditors	$ 100	60	6,000
Out-of Pocket (travel, postage, printing)			500
2016 Not to exceed fee			**$ 20,575**

It is anticipated that subsequent years would increase by approximately 3% as follows:

2017	**$ 21,190**
2018	**$ 21,830**
2019	**$ 22,480**
2020	**$ 23,150**

The above fees and expenses are based on the assumption that City personnel will be available to assist us in preparing confirmations and trial balances, pulling invoices and other supporting documents, and preparing supporting schedules for each fund. Other circumstances encountered during the audit (such as significant breakdown in internal controls or loss of key financial personnel) would be subject to fee adjustments made as a result of discussions with the City's management regarding the effect of such circumstances on the audit.

ADDITIONAL WORK

Additional work may be required to provide the assurances contemplated in performing an audit. Additional work will be discussed with management as the audit progresses, but will be billed at "quoted" hourly rates as listed above.

ENGAGEMENT APPROACH AND PROPOSED TIMING

Description	Scheduling	Estimated Hours
Engagement planning, review of prior auditors' work papers, preliminary work paper set up, identification of confirmations to be sent, discussions with management regarding schedules to be prepared by City staff, review & testing of internal controls, and fraud interviews.	**Upon appointment through August 1st**	**30**
Receipt of trial balance from City staff, and preliminary analytical review.	**When available, no later than October 1st**	**15**
Field Work (test of accounts and balances, and compliance testing), write of report.	**Oct 1 - Nov 15th**	**80**
Review draft reports with management, review journal entries, discuss management letter comments.	**By December 10th**	**10**
Issue audit reports and financial statements and present to City Council.	**Prior to December 31st**	**5**
Totals		**140**

The proposed timing may be adjusted if the City's financial information is compiled prior to the dates noted above.

NON-DISCRIMINATION CLAUSE

We specifically affirm that the firm does not discriminate against any individual because of race, religion, sex, color, age, handicap, or national origin, and that these shall not be a factor in consideration for employment, selection of training, promotion, transfer, recruitment, rates of pay, or other forms of compensation, demotion, or separation.

ULRICH & ASSOCIATES, PC
GOVERNMENTAL CLIENT LIST

Attest Type	Entity Type	Entity	Financial Software	Since year ending	Contact			Other
Audit	Municipality	Clearfield City	Sungard	1993	Rich Knapp	Finance Director	801-525-2720	GFOA Certificate
Audit	Municipality	Farmington City	Caselle	1987	Keith Johnson	Finance Director	801-939-9204	GFOA Certificate
Audit	Municipality	Huntsville Town	QuickBooks	1989				
Audit	Municipality	Oakley City	Pelorus	1994				
Audit	Municipality	Town of Stockton	Pelorus	1999				
Audit	Municipality	West Point City	Caselle	2011				
Auidt	Municipality	Providence	Pelorus	2015				
AUP	Municipality	Town of Woodruff	QuickBooks	1993				
AUP	Municipality	Randolph Town	QuickBooks	2003				
AUP	Municipality	Rush Valley Town	QuickBooks	2004				
Audit	County	Rich County	Caselle	1988	Bill Cox	Commissioner	435-757-8248	
Audit	County	Summit County	Caselle	2005	Matt Leavitt	Finance Officer	435-336-3017	Single audit
Audit	County	Morgan County	Caselle	2010				
Audit	County	Tooele County	Caselle	2013	Mike Jensen	Treasurer	435-843-3191	Single audit
Audit	County	Box Elder County	Tyler	2014				
Audit	County	Davis County	Other	2015				
Audit	District	South Summit Fire	QuickBooks	1989				
AUP	District	Upper Colorado River	QuickBooks	1995				
AUP	District	Mountain Green Fire	QuickBooks	2007				
AUP	District	South Weber Water Improvement	QuickBooks	1996				
AUP	District	Tooele Recreation	Other	2013				
AUP	District	Woodruff Fire	QuickBooks	2015				
Other	City	Uintah City	Caselle	2013	Bookkeeping, payroll, and general ledger services			

All reports are available through the Office of the Utah State Auditor website http://www.auditor.utah.gov

AUP Agreed Upon Procedures with compilation

Centerville City

Audit Proposal

June 30, 2016

LITZ & COMPANY

Certified Public Accountants
A Professional Corporation

CENTERVILLE CITY
AUDIT PROPOSAL
June 30, 2016

Table of Contents

Profile of Litz & Company, P.C 2

Experience and Capability 2-3

Approach 4

Fees and Hours 4-5

Resumes:

- Brent E Litz, CPA 6
- Ilene Helfrich, MBA, CPA 7
- Allison Litz, BSA 8
- Joanna Carmony, BSA 9
- Leilani Lopez, BSA 10
- Timothy D Herbert, BSA 11

CENTERVILLE CITY
AUDIT PROPOSAL
June 30, 2016

I. PROFILE OF LITZ & COMPANY, P.C.

The Company was started in 1992 by its originator Brent E Litz, CPA. Mr. Litz has been in public accounting for over twenty five years with a substantial amount of that time devoted to audits of municipal, governmental, nonprofit and private organizations. Through this specialized experience he has been able to develop and implement auditing procedures which are both efficient and effective in dealing with governmental organizations and their unique circumstances. These procedures include audits of computerized systems.

From our office in Roy, Utah, Litz & Company, P.C. is able to serve its broad base of clients located in Utah, Nevada, Idaho and Wyoming. Our staff is well versed in governmental accounting and auditing as can be seen from the attached resumes.

Litz & Company, P.C. is licensed to practice public accounting in Utah. The Company, as well as its professional employees have met all the requirements as outlined in the Government Auditing Standards as it applies to continuing governmental education. Mr. Litz has an extensive educational background in audits of governmental entities and has completed the AICPA's certificate of education achievement program on governmental accounting and auditing. He has also provided instruction to the Utah Association of County Treasurers and the Utah Association of Municipal Clerks on governmental accounting issues at their annual seminars.

Litz & Company, P.C. does not discriminate against any individual because of race, religion, sex, color, age, handicap or national origin and these are not a factor in consideration for employment, selection of training, promotion, transfer, recruitment, rate of pay or any other form of compensation, demotion or separation.

Litz & Company, P.C. is independent with respect to Centerville City. The Company is a member of the AICPA's quality review program and has successfully completed its review. **All reviews of the Company have been unqualified reviews with no letters of comment. This is the highest level of compliance with professional standards and is obtained by only a few percent of CPA firms.** Please review the attached quality review report.

II. EXPERIENCE AND CAPABILITY

We feel our specialized experience in governmental and municipal auditing and accounting will benefit Centerville City. All staff members assigned to the engagement have extensive experience in governmental auditing and accounting. This experience will enable us to keep you informed of emerging issues while eliminating time spent by your staff in familiarizing us with the peculiarities of your organization and your various reporting requirements.

fee, our average hourly rate would only be $75 per hour for the first year. In subsequent years it is anticipated that the audit time would range from 180 - 220 hours billed at $105 per hour with a maximum cap as outlined below.

First Year Assignment	Name	Hours
Auditor	Brent E Litz, CPA	40
Auditor	Ilene Helfrich, CPA	20
Auditor	Allison Litz, BSA	70
Auditor	Joanna Carmony, BSA	As Needed
Auditor	Leilani Lopez, BSA	30
Auditor	Timothy Herbert	60
Clerical	Ashley Herbert	10

Year	Annual Fees
2016	$17,250
2017	$17,750
2018	$18,250
2019	$18,750

Our cost for performing a Single Audit would be $2,750 for a single major program. Should the City have multiple major programs we would be happy to quote that rate based on the programs involved.

Audit Staff: **Ilene Helfrich, MBA, CPA**

Experience: Ms. Helfrich has over 15 years of audit and tax experience. This experience includes taxation, financial reporting, and auditing of government, nonprofit and for profit organizations. Ms. Helfrich's experience includes the following entities:

* Colorado River Basin Salinity Control
* Construction
* Other Non-Profit Organizations
* Other Private Organizations
  HUD audits
* Manufacturing
* Wasatch Mental Health
  Weber County
  Weber Human Services

*Presently serve as auditors

Education:

MBA in Accounting – State University of New York
Bachelor of Science /Business Administration – State University of New York
Continuing Professional Education

Memberships:

American Institute of Certified Public Accountants
Utah Association of Certified Public Accountants

Continuing Professional Education Courses:

To comply with the new education requirements, 40 hours of audit and governmental courses are taken annually as follows:

Utah State Auditor's Office Governmental Updates
GASB 34 implementation
Single Audit
Yellow Book Auditing

Auditor: **Joanna Carmony, BSA**

Experience: Mrs. Carmony has 9 years of audit, accounting and tax experience. This experience includes taxation, financial reporting, and auditing of government, nonprofit and for profit organizations.

Mrs. Carmony's experience includes the following organizations:

* City of Saratoga Springs
  Ogden Convention Visitors Bureau
  Ogden Institute of Massage Therapy
  Ogden Weber Community Action Partnership
* Other Non-Profit Organizations
* Other Private Organizations
  Riverdale City
  South Ogden City
* Wasatch Mental Health
  Washington Terrace City
  Weber Human Services

*Presently serve as auditors

Education:

Weber State University – B.S. Accounting
Continuing Professional Education

Continuing Professional Education Courses:

To comply with the new education requirements, 40 hours of audit and governmental courses are taken annually as follows:

Utah State Auditor's Office Governmental Updates
GASB 34 implementation
Single Audit
Yellow Book Auditing

Auditor: **Timothy D Herbert, BSA**

Experience: Mr. Herbert has 2 years of accounting and audit experience. This experience includes taxation, financial reporting, and auditing of small business, government, and nonprofit organizations. Mr. Herbert's experience includes the following organizations:

Homeland Field Services
* City of Saratoga Springs
* Davis Behavioral Health
Ogden Convention Visitors Bureau
* Other Non Profit Organizations
* Roy City
* Weber Pathways
* **Small Businesses**

*Presently serve as auditors

Education: Weber State University – B.S. Accounting
Continuing Professional Education

Continuing Professional Education Courses:

To comply with the new education requirements, 40 hours of audit and governmental courses are taken annually as follows:

Utah State Auditor's Office Governmental Updates
GASB 34 implementation
Single Audit
Yellow Book Auditing

Proposal for Audit Services

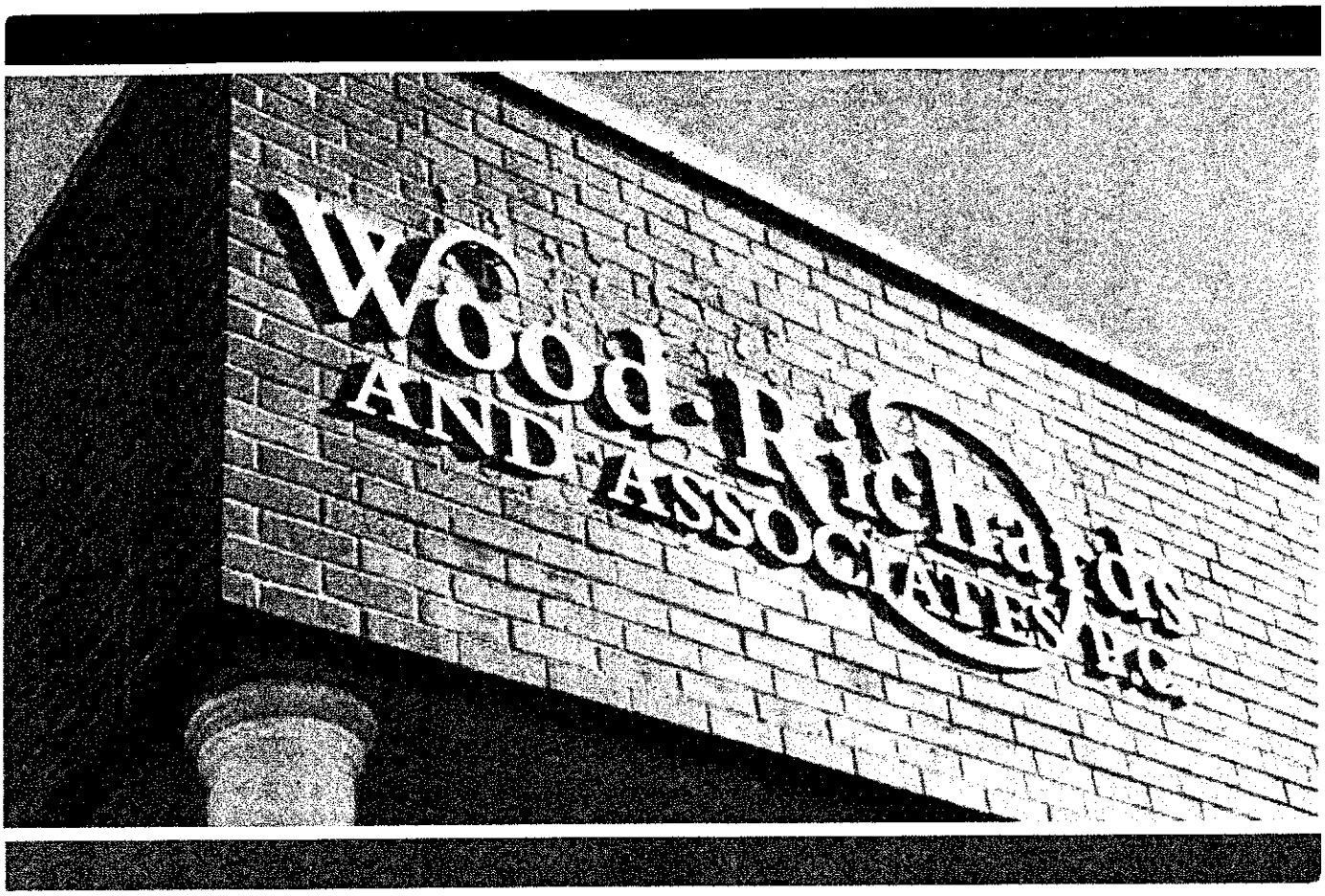

Centerville City

Centerville City

By: Wood, Richards & Associates
Ryan Child
2490 Wall Ave, Ogden, UT 84401
801-621-0440
March 31, 2016

TABLE OF CONTENTS

Letter of Transmittal 1

Profile of Our Firm 2
- Background of Wood Richards 2
- Memberships 2
- Education and Training 2

Affirmations 3

Nondiscrimination Clause 3

Insurance 3

Indemnity Provision 3

Qualifications 3-5
- Advantages of Our Firm 5
- Relevant Experience 6
- References 6
- Audit Team and Their Roles 6

Approach to the Examination 7

Time Requirements and Proposed Schedule 8

Fees 9

Individual Biographies
- Lynn J. Wood, CPA 10
- Ryan R. Child, MACC, CPA 11
- Jill Donahue, MACC 12

Peer Review Letter (No letter of comment issued) 13

Wood · Richards

Royce J. Richards, J. D., CPA
Lynn J. Wood, CPA
Ryan R. Child, CPA

March 31, 2016

Centerville City
250 N. Main Street
Centerville, UT 84014

We appreciate the opportunity to submit this proposal to perform auditing services for Centerville City for the year ended June 30, 2016. We are very interested in working with the City and believe our firm can provide high quality auditing services in a timely manner to the City. Our audit team has years of collective experience in auditing and with local governments.

We believe that some of our services are unique from our competitors as we have worked internally to accomplish multiple objectives. One objective is a very high level of quality control on our audit work, including financial auditing with respect to GASB standards and evaluating and assessing internal controls. The second objective is to always keep in mind the practical needs of our clients as we try to assist our clients in handling wide spread challenges among local governments. We are happy to help with new challenges throughout the year and not just during the audit time frame.

We appreciate your consideration. Should you have any questions, please feel free to call us at 801-621-0440.

Sincerely yours,

Ryan R Child

Ryan R. Child, CPA

2490 Wall Avenue Ogden, Utah 84401 Phone (801) 621-0440 Fax (801) 399-9264

PROFILE OF OUR FIRM:

Background of Wood, Richards & Associates and Staff Continuity:

- Wood, Richards & Associates PC is a local CPA firm with its office in Ogden, Utah. We have extensive background in auditing local governments in Northern Utah. Currently, we have seven experienced professionals including CPAs and approximately five other accountants and support staff.

- All audit work will be performed from our Ogden office which is located at 2490 Wall Avenue.

- The firm has over 35 years of experience in attestation engagements such as audits, reviews, agreed-upon procedures, and compilations. Our audit practice is focused and concentrated with local governments in Northern Utah.

- The partners of the firm are Ryan R. Child, Lynn J. Wood, and Royce J. Richards.

Memberships:

- Our firm is a member of the American Institute of Certified Public Accountants. This membership requires us to submit to strict rules of quality control including annual internal inspections and external peer reviews every three years.

- We are members and sponsors of the Utah Government Finance Officers Association.

- We are also members of the Utah Association of Certified Public Accountants (UACPA) and are properly licensed to practice in the State of Utah.

Education and training:

- We conduct regular in-house training on auditing and accounting standards to keep ourselves sharp.

- Annually, we attend continued education from the UACPA in order to keep us up-to-date on legislative changes, GASB standards, and auditing standards.

- We receive the requirements of continued professional education from the U.S. General Accounting Office.

AFFIRMATIONS:

- Our firm is properly licensed to practice as a certified public accounting firm in the State of Utah.
- Our firm meets the independence requirements of the American Institute of Certified Public Accountants and the current Government Auditing Standards. We have no independence issues or conflicts of interest in relation to Centerville City.
- Our firm meets the continuing education and external quality control review requirements contained in the current Government Auditing Standards published by the U.S. General Accounting Office.
- Our firm and each member of the firm are in good standing with the UACPA, AICPA, and other regulatory authorities including the Department of Occupational Licensing. No complaints or compliance issues have occurred with any member of the firm.

NONDISCRIMINATION CLAUSE

Our firm does not discriminate against any individual because of race, religion, sex, color, age, handicap, or national origin. These shall not be a factor in consideration for employment, selection of training, promotion, transfer, recruitment, rates of pay, or other forms of compensation, promotion, or separation.

LIABILITY INSURANCE

The firm carries more than sufficient liability insurance.

INDEMNITY PROVISION

Our firm agrees to defend, indemnify, and hold harmless the City, its officials, employees, representatives, and volunteers from and against any and all claims, demands defense costs, liability or consequential damages of any kind or nature arising from any negligent or wrongful conduct or from our duties as the City's auditor, and from any performance or failure to perform, under the terms of this agreement.

QUALIFICATIONS

Personnel to be assigned to the audit:

Team Member	Position
Lynn J. Wood, CPA	Partner
Ryan R. Child, MAcc, CPA	Partner
Jill Donahue, MAcc	Staff

Technology:

We utilize up-to-date technology in order for us to sort and analyze accounting data, enabling us to make assessments on the risk areas of an audit and focus our time on those areas. We use Engagement CS and PPC Smart Practice Aids, both developed by Thomson Reuters. The technology and risk assessment allows us to focus our time auditing financial records and spend less time doing tedious data input, which makes our audits efficient, benefiting both the firm and the client.

Our staff has in-depth knowledge of computerized accounting systems and they possess all the skills necessary to audit these complex systems.

Communication:

We strive to maintain high levels of communication with our audit clients before, during, and after the audit. This allows the organizational personnel and governing board to be involved in the audit process and provide input and feedback into the audit procedures.

Quality control:

Our firm has received a "pass rating" on our report from our latest peer review, which occurred in 2013. The pass rating is the highest rating available. No letter of comment was included.

We have also been reviewed by the State Auditor's Office on their periodic evaluations and received a good report with a "pass rating" as well.

New standards and regulations:

We keep in mind the needs of an Organization for effectiveness and compliance with state and federal regulations and new accounting standards. We communicate any relevant changes to standards and regulations to our clients throughout the year in order for them to be prepared to handle those changes as they arise.

QUALIFICATIONS (continued)

Application of various auditing and accounting methods:

Mr. Lynn Wood has served as a review team captain in reviewing other public accounting firms. This has allowed Lynn to see the various methods and approaches to attestation engagements. He has been able to combine the ideas of many firms together into one.

Because of our vast background in nonprofit finance and auditing, we are able to provide ideas which we obtain from other entities with regards to accounting and compliance.

Timeliness:

Our firm always strives to provide timely reports to our clients. We understand that the sooner the financial statements are provided to management and the governing board, the more useful the information is. However, we do not cut corners in order to accomplish this.

ADVANTAGES OF OUR FIRM

1. We have extensive experience in governmental audits including municipalities.

2. We make it a point to communicate with our clients any new legislative changes, state audit requirements, and accounting standard changes that may have an impact on our clients.

3. We strive to report financial information in a timely manner to maximize the usefulness to its users.

4. The firm size makes us big enough to handle the task in a timely manner, but still be personable to the officials and staff members of Centerville City.

5. We have a comprehensive knowledge of the accounting required for governments and our staff is thorough in its work.

6. Experience from multiple perspectives of the accounting and oversight of nonprofits and governmental entities.

    a. Ryan Child is currently serving on the board and audit committee of the Ogden Weber Community Action Partnership.

    b. Ryan is serving on the audit committee for Weber County.

    c. Lynn Wood is currently serving on the board of the Ogden Pioneer Heritage Foundation and on the audit committee of the Ogden School District.

    d. Conduct annual audits and reviews of local governments.

RELEVANT EXPERIENCE

We take a lot of pride in our client satisfaction and retention. Over the past few years we have audited and continue to audit the governmental entities of similar size and nature to Centerville City as listed below.

1. North Salt Lake
2. Clinton City
3. Fruit Heights
4. Pleasant View City

REFERENCES

- Cody Cardon at Riverdale City – (801) 394-5541
- Brandon Green at Fruit Heights City – (801) 546-0861

AUDIT TEAM AND THEIR ROLES

Lynn J. Wood, CPA

As a partner of the firm, Lynn will work in the planning stages of the audit and be available for regular assistance to the audit team and City personnel. Lynn provides an extensive review of the assessments, documentation, and financial statements after they have been reviewed by Ryan Child. Lynn makes judgments on contingencies and other sensitive issues surrounding local governments.

Ryan R. Child, MAcc, CPA

Ryan will be heavily involved in the risk identification, assessment, and planning stages of the audit and be involved in some of the substantive procedures. Ryan will be heavily involved in the internal control evaluation. Ryan provides a quality control review on all audit documentation and financial statements to ensure that the end product is accurate, complete, and meaningful to the end user.

Jill Donahue, MAcc, B.S. Accounting

Jill has participated in audits of all sizes that our firm provides services to over the past few years. Jill will play a major role in analytical and substantive procedures over various audit areas. Jill will perform the first technical review of the audit work papers and procedures before Ryan's review.

Jill will play a role in preparing trial balances, lead schedules, and financial statements and footnotes and performing tests of transactions and balances through the audit. She will also be involved in the compliance related work and statement preparation.

APPROACH TO EXAMINATION

Planning and Risk Identification

- Gaining an understanding of controls/backgrounds through policies, inquiries, and walkthroughs.
- Identify and assess risks from controls, minutes, inquiries, and analytical procedures.

Creating an Audit Approach

- Designed through our risk assessments from the planning and identification process.
- Analytical procedures and ratio analysis.
- Inquiries with employees, management, & board.

Substantive Audit Procedures

- Tracing transactions and balances through the accounting system and supporting documentation.
- Third-party confirmation.
- Gaining sufficient evidence to support balances and transactions.

Review and Supervision

- The review process has one formal review of the planning process and the final work papers and an informal oversight throughout the engagement.
- Two quality control reviews prior to release of financial statements.

Representations

- Management will sign a representation letter that the information provided to us for the audit did not contain any misrepresentations.

Reports

- At the end of the audit we will provide financial statements and footnotes, auditor's reports, findings, and a management letter.
- Reports will be presented to the board members in a useful and meaningful way.

TIME REQUIREMENTS AND PROPOSED SCHEDULE

We commit to meet the reporting deadline requirement associated with this audit. Below is a proposed schedule for the procedures:

Audit Area:	Key Dates	Hours
Planning and risk work	July	28
Substantive procedures	October or when ready	105
Compliance	October	25
Statement preparation/review	November	20
Supervision and review	Throughout	20
Report presentation	November	2
		200

We have always strived to meet deadlines and have a great record of performing the services within the timed schedule agreed upon between us and the auditees.

FEES

Below is an illustration of the number of hours by staff level that we have allocated resources for the engagement within the prescribed time frame. If additional hours are required, the firm will simply put in additional hours to finish the audit within the time frame outlined. Our total "not-to-exceed" fee for the 2016 audit is $17,725.

Staff Level	Hours	Hourly Rate	Total
Partner	30	$ 100	$ 3,000
Manager/Partner	75	95	7,125
Staff	95	80	7,600
	200		$ 17,725

Our "not-to-exceed" fees for each of the five years under this arrangement are as follows:

	Annual Fees
2016	$ 17,725
2017	$ 17,725
2018	$ 17,725
2019	$ 17,725
2020	$ 17,725

Lynn J. Wood, CPA

Education: Bachelor of Science – Accounting, Weber State University

Minor in computer information systems

Professional Experience:

Mr. Wood has been actively involved in governmental accounting and auditing through a committee of the UACPA. His involvement has included participation in accounting manuals prepared by the State Auditor, as well as policy issues.

Mr. Wood served on the Ogden School Board from 1995 to 2002. He also served on the USBA executive committee. In the community, he currently serves on two foundation boards. He served 27 years in the Kiwanis and has served on several government advisory boards. He has worked in governmental accounting and auditing for the past 30 years. During this time he has supervised a number of large audits. Some of the entities Mr. Wood has worked with include the following:

- Pleasant View
- Kaysville City
- Plain City
- Bona Vista Water Improvement District

Continuing Professional Education:

Mr. Wood has met all requirements for continuing professional education. Some of the courses he has attended include:

- Utah State Auditor's Office Governmental Updates
- Utah Association of Certified Public Accountants State and Local Governments Conferences

Background:

In Lynn's spare time he enjoys spending time at his cabin near Causey Reservoir, attending musical performances, and spending time with his grandchildren.

Ryan Child, MAcc, CPA

Education: Master of Professional Accounting, Weber State University
Bachelor of Science – Accounting, Weber State University

Professional Experience:

Mr. Child has managed, planned, and carried out approximately 40 annual financial audits and reviews. These engagements include local governments, nonprofit organizations, and profit motivated entities including construction, oil marketing & selling, and HUD subsidized housing projects. Mr. Child has accounted for complex accounting situations including multi-million dollar bond issuances. Mr. Child communicates with management and oversight boards regarding sensitive information including litigations, internal controls, conflicts of interest, and budgetary analyses. Mr. Child conducts in-house quality control inspections with regard to standard and regulatory compliance with respect to government and nonprofit auditing. Mr. Child schedules the workloads for the audit team. Some of the entities Mr. Child has worked with include the following:

- Willard City
- Clinton City
- North Salt Lake City
- Morgan City

Continuing Professional Education:

Mr. Child has met all requirements for continuing professional education. Some of the courses he has attended include:

- Utah State Auditor's Office Governmental Updates
- Utah Association of Certified Public Accountants State and Local Governments Conferences
- Mr. Child is also studying to become a Certified Government Financial Manager (CGFM).

Background:

In Ryan's spare time he enjoys spending whatever time he can with his wife and children, even if that means McDonald's play house. He also enjoys the outdoors, including fishing, hiking, and camping.

Jill Donahue, MAcc

Education: Master of Professional Accounting, Weber State University
Bachelor of Science – Accounting, Weber State University

Professional Experience:

Ms. Donahue has worked for the firm for two years in auditing and accounting, and is currently working on her license as a certified public accountant. She has primarily spent her time auditing governmental and non-profit entities and has been responsible for all components of the audit. She is experienced in the preparation of the audit report and financial statements.

Some of the entities Ms. Donahue has worked with include the following:

- Uintah City
- Farr West City
- Marriott-Slaterville
- Kamas City

Continuing Professional Education:

Ms. Donahue has met all requirements for continuing professional education. Some of the courses she has attended include:

- Utah State Auditor's Office Governmental Updates
- Utah Association of Certified Public Accountants State and Local Governments Conferences

Background:

When Jill is not in the office or studying, she enjoys attending concerts, traveling with her fiancé, and spending time with their birds.

Evans & Poulsen P.A.

Certified Public Accountants

Members of the American Institute of CPA's
and the Idaho Society of CPA's
Edward G. Evans, CPA
Jeffrey D. Poulsen, CPA

System Review Report

August 23, 2013

To the Owners of
Wood, Richards & Associates
and the Peer Review Committee of the Nevada Society of Certified Public Accountants

We have reviewed the system of quality control for the accounting and auditing practice of Wood, Richards & Associates (the firm) in effect for the year ended March 31, 2013. Our peer review was conducted in accordance with the Standards for Performing and Reporting on Peer Reviews established by the Peer Review Board of the American Institute of Certified Public Accountants. As a part of our peer review, we considered reviews by regulatory entities, if applicable, in determining the nature and extent of our procedures. The firm is responsible for designing a system of quality control and complying with it to provide the firm with reasonable assurance of performing and reporting in conformity with applicable professional standards in all material respects. Our responsibility is to express an opinion on the design of the system of quality control and the firm's compliance therewith based on our review. The nature, objectives, scope, limitations of, and the procedures performed in a System Review are described in the standards at www.aicpa.org/prsummary.

As required by the standards, engagements selected for review included engagements performed under the *Government Auditing Standards* and audits of employee benefit plans.

In our opinion, the system of quality control for the accounting and auditing practice of Wood, Richards & Associates in effect for the year ended March 31, 2013, has been suitably designed and complied with to provide the firm with reasonable assurance of performing and reporting in conformity with applicable professional standards in all material respects. Firms can receive a rating of *pass, pass with deficiency(ies)* or *fail*. Wood, Richards & Associates has received a peer review rating of *pass*.

Evans & Poulsen

Evans & Poulsen, P.A.

1360 Albion Avenue • Burley, Idaho 83318 • (208) 678-1300 • Fax (208) 678-1301 • evanscpa@pmt.org

Christensen, Palmer and Ambrose
298 24th Street, Suite 300
Ogden, Utah 84401

Hansen Bradshaw Malmrose and Erickson
559 West 500 South
Bountiful, Utah 84010

Haynie & Compnay, P.C.
1785 West 2300 South
Salt Lake City, Utah 84119

Keddington & Christensen
5292 South College Drive, suite 102
Salt Lake City, Utah 84123-2958

Litz & Company, P.C.
5145 South Airport Road. Suite 100
Roy, Utah 84067

Pinnock, Robbins, Posey & Richins
2015 South State Street, suite 850
Salt Lake City, Utah 84111

Ulrich & Associates, P.C.
4991 South Harrison Blvd.
Ogden, Utah 84403

Wiggins & CO., P.C.
770 East 9000 South, Suite B
Sandy, Utah 84094-3097

Wood Richards & Associates, P.C.
2490 Wall Avenue
Ogden, Utah 84401

UTOPIA

FY17 Tentative Budget Presentation

April 11, 2016

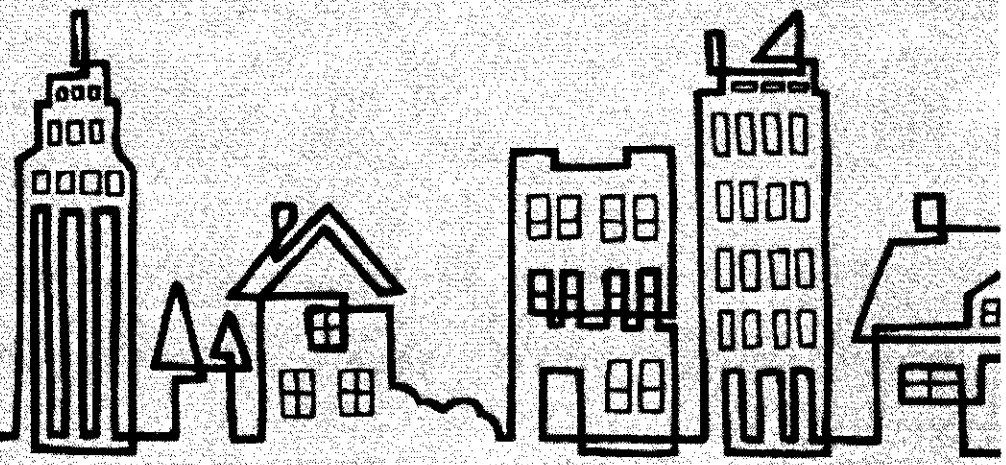

Original '5 Year Plan' Objectives

- Started July, 2011 with UIA Bonding
- New bonding will generate sufficient revenues to cover:
  - New debt obligations
  - To reach operational break-even
- Deploy as much infrastructure as resources allow
- Contribute to debt relief (pledge payments)

Original '5 Year Plan' Strategies

- Asset deployment based on best ROI
  - Calculate Payback based on:
    - Construction Costs
    - Anticipated Revenue
  - Rank by quickest payback
- Increase addressable market
- Leverage stimulus build
- Maximize operational efficiency

Original '5 Year Plan' Performance

- Covered all new debt payments without hitting city backstops
- Increased addressable market
- Completed stimulus build-out
- Completed initial Sweet Spot construction build
- Added over 6,200 UIA subscribers since July 2011
- Added over 500 new UTOPIA subscribers since April, 2015

Original '5 Year Plan' Performance (Continued)

- UIA recurring revenues grown to approximately $650,000 per month
- Combined Network Revenues nearly $1,100,000 per month
  - Continues to grow at $10,000 – $14,000 per month
- Eliminated combined operational shortfall

Combined Revenue Growth

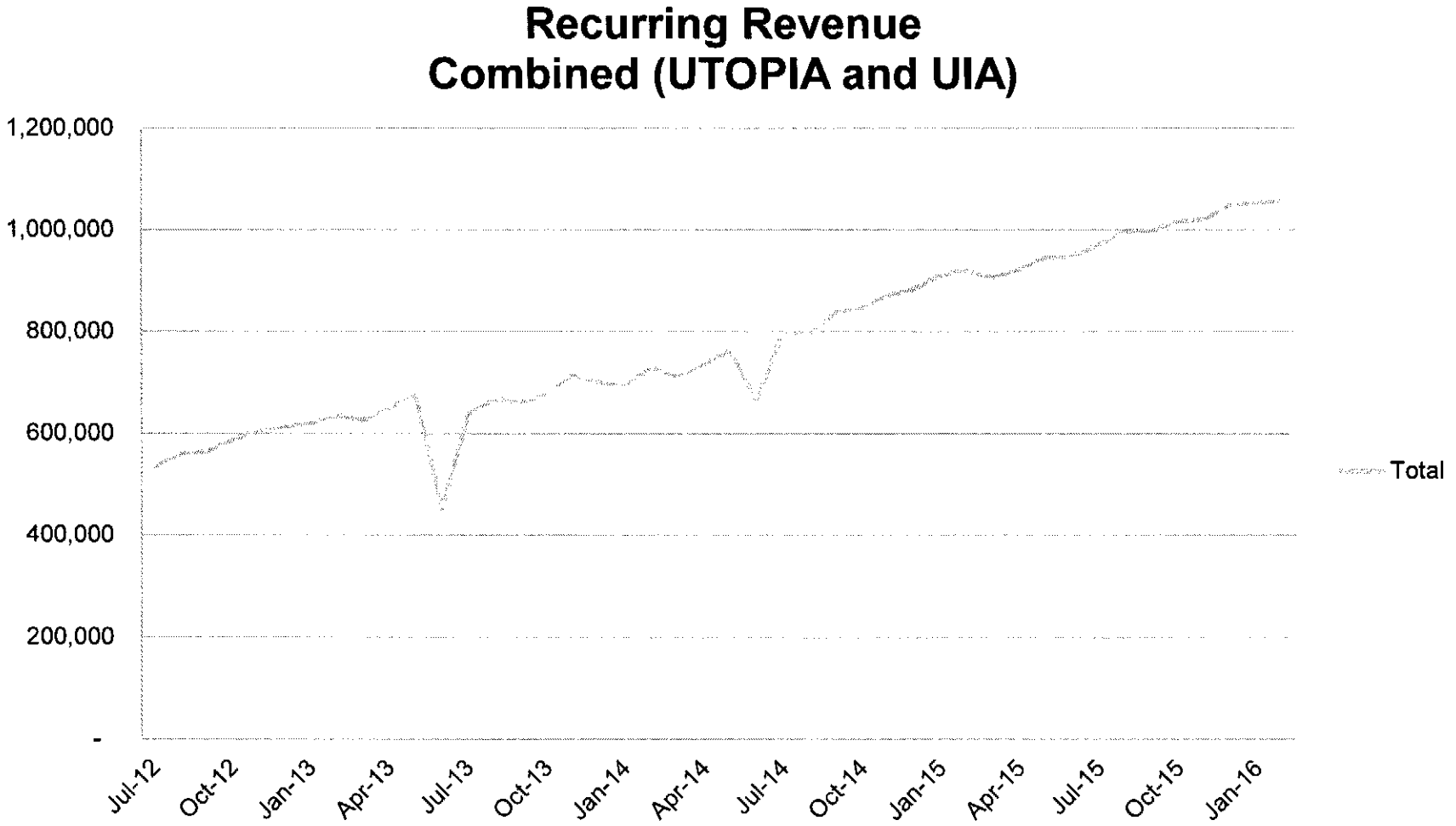

Original '5 Year Plan' Performance (Continued)

- Sufficient revenues to cover 2015 bond before 1st payment came due
- Achieve Break Even prior to taking down final $24M Bond
- No assessments in FY16 to date and none anticipated in FY17

Current Available Funding

- $10.0 M RUS Settlement Funds
  - UTOPIA Funds
- $24.3 M Bond
  - UIA Funding
- So what are we doing with those funds?

Sources and Uses of Funds

RUS Settlement	10,000,000
Phase III Bond	26,144,600
Total	36,144,600
Construction	20,690,000
Installs	5,490,600
Marketing	1,450,000
Electronics Upgrades	7,255,000
Bond Issuance Costs	404,000
Cap Interest *	463,000
Other	392,000
Total	36,144,600

Continue to follow original '5 Year Plan' Strategies

- Asset deployment based on best ROI (with a bias towards parity)
  - Calculate Payback based on:
    - Construction Costs
    - Anticipated Revenue
  - Rank by quickest payback
- Stimulus and Open Trench Opportunities push some projects to top of list
- Also continued focus on:
  - Business
  - "Green" Addresses"

FY17 Budget
UIA Highlights

Exhibit A
Utah Infrastructure Agency
Proposed Budget for the year ended JUNE 30, 2017
(Cash Basis)

	PROPOSED FYE 2016	PROPOSED FY 2017
OPERATING BUDGET		
Revenue	7,467,000	8,694,905
Total Operating Expenses	308,000	396,000
Total Professional Services	24,000	24,000
Total Network Management	444,000	724,593
Total Operating Expenses	776,000	1,144,593
Other Income / Expense		
Interest Income	-	(39,000)
Interest Expense	2,673,815	3,000,000
Total Other Income / Expense	2,673,815	2,961,000
Total Expenses	3,449,815	4,105,593
Net Income	4,017,185	4,589,312
IRU Principal Payment	559,000	559,000
Principal Payment	1,005,000	1,645,000
Total Principal Payment	1,564,000	2,204,000
Accelerated IRU Payment	2,922,808	1,870,447
Total Outfflow	4,486,808	4,074,447
Change in Cash Position (2)	(469,623)	514,865
FINANCING		
Net Financing Activities	24,295,000	-
Total Capital Expenditures (1)	6,000,000	17,000,000

(1) CAPEX in FY16 covered by 2013 and 2015 Bond Proceeds
(2) Interest on 2015 Bond covered by CAP I (463,000)

FY17 Budget
UTOPIA Highlights

Proposed Budget for the year ended JUNE 30, 2017
(Cash Basis)

	PROPOSED FY 2016	PROPOSED FY 2017
OPERATING BUDGET		
Revenue	5,404,903	6,551,382
Agency Expenses		
Wages / Benefits	4,584,295	4,651,633
Other Agency Expenses	1,070,652	1,318,596
Total Agency Expenses	5,654,947	5,970,229
Total Professional Services	567,765	435,600
Total Network Management	2,104,999	2,016,000
Total Operating Expenses	8,327,711	8,421,829
Other Income / Expense		
Interest Income	-	-
Interest Expense	13,718,784	13,993,784
Total Other Income / Expense	13,718,784	13,993,784
Total Expenses	22,046,495	22,415,613
Net Income	(16,641,592)	(15,864,231)
City Pledge Payments	13,718,784	13,993,784
Accelerated IRU Payment	2,922,808	1,870,447
Accelerated IRU Payment-Assessments		
Total	16,641,592	15,864,231
Net	-	-
CAPITAL BUDGET		
Total Capital Expenditures (1)	7,000,000	1,100,000

(1) CAPEX covered by RUS Settlement Funds

FY17 Budget - UTOPIA Headcounts

	Peak	FY15	FY16	FY17
Exec Director	1		1	1
Exec Admin	1		1	1
CFO	1	1	1	1
Acctg	4	2	3	3
Admin			1	1
CTO	1			
Engineering	3	4	4	4
Director-Marketing	1	1	1	1
Marketing	6	4	5	5
Customer Service	6	4	4	4
Director-Outside Plant	1			
Director-Strategic Plan	1	1	1	1
Outside Plant	7	3	5	5
Director-Operations	1	1	1	1
Operations	5	4	4	4
FSG	6	6	7	8
NOC	6	6	6	6
Total	51	37	45	46
Reduction from peak		27.5%	11.8%	9.8%

Thank You

Exhibit A
Utah Infrastructure Agency
Proposed Budget for the year ended JUNE 30, 2017

	ACTUAL FY 2015	APPROVED FY 2016	PROPOSED FYE 2016	PROPOSED FY 2017
OPERATING BUDGET				
Revenue	6,603,902	7,450,000	7,467,000	8,694,905
Operating Expenses				
Marketing	86,013	240,000	240,000	324,000
Other operating Expenses	55,790	51,000	68,000	72,000
Total Operating Expenses	141,803	291,000	308,000	396,000
Total Professional Services	22,448	24,000	24,000	24,000
Total Network Management	364,211	444,000	444,000	724,593
Total Operating Expenses	528,462	759,000	776,000	1,144,593
Other Income / Expense				
Other Expense	-	-	-	-
Other Income	(799,864)			
Depreciation	2,653,387	3,600,000	3,600,000	3,600,000
Interest Income	(14,963)	-	-	(39,000)
Interest Expense	1,917,899	1,998,000	3,083,815	3,000,000
Total Other Income / Expense	3,756,459	5,598,000	6,683,815	6,561,000
Total Expenses	4,284,921	6,357,000	7,459,815	7,705,593
Net Income	2,318,981	1,093,000	7,185	989,312
CAPITAL BUDGET				
Total Capital Expenditures (1)	3,413,475	379,000	6,000,000	17,000,000
FINANCING				
Net Financing Activities		-	24,295,000	-

(1) CAPEX covered by Bond Proceeds

Exhibit A
Utah Infrastructure Agency
Proposed Budget for the year ended JUNE 30, 2017
(Cash Basis)

	PROPOSED FYE 2016	PROPOSED FY 2017
OPERATING BUDGET		
Revenue	7,467,000	8,694,905
Operating Expenses		
Marketing	240,000	324,000
Other operating Expenses	68,000	72,000
Total Operating Expenses	308,000	396,000
Total Professional Services	24,000	24,000
Total Network Management	444,000	724,593
Total Operating Expenses	776,000	1,144,593
Other Income / Expense		
Other Expense	-	-
Other Income		
Interest Income	-	(39,000)
Interest Expense	2,673,815	3,000,000
Total Other Income / Expense	2,673,815	2,961,000
Total Expenses	3,449,815	4,105,593
Net Income	4,017,185	4,589,312
IRU Principal Payment	559,000	559,000
Principal Payment	1,005,000	1,645,000
Total Principal Payment	1,564,000	2,204,000
Accelerated IRU Payment	2,922,808	1,870,447
Total Outfflow	4,486,808	4,074,447
Change in Cash Position (2)	(469,623)	514,865
FINANCING		
Net Financing Activities	24,295,000	-
Total Capital Expenditures (1)	6,000,000	17,000,000

(1) CAPEX in FY16 covered by 2013 and 2015 Bond Proceeds
(2) Interest on 2015 Bond covered by CAP I (463,000)

UIA
Detail Budget

	ACTUAL FY 2015	APPROVED FY 2016	PROPOSED FYE 2016	PROPOSED FY 2017
Total Revenue	6,603,902	7,450,000	7,467,000	8,694,905
Administrative Expense				
Wages / Benefits				
Marketing	86,013	240,000	240,000	324,000
Bank Service Charges	55,790	51,000	68,000	72,000
Admin Expenses	141,803	291,000	308,000	396,000
Professional Services				
Legal				
City Admin Fee	22,448	24,000	24,000	24,000
Professional Services	22,448	24,000	24,000	24,000
Total Agency Expense	164,251	315,000	332,000	420,000
Network Management				
Operations	311,090	360,000	360,000	457,035
Field Maintenance	44,101	72,000	72,000	250,222
Provisioning	9,020	12,000	12,000	17,336
Network Management	364,211	444,000	444,000	724,593
Total Operating Expenses	528,462	759,000	776,000	1,144,593
Operating Profit (Loss)	6,075,440	6,691,000	6,691,000	7,550,312
Other Income / Expense				
Depreciation	2,653,387	3,600,000	3,600,000	3,600,000
Interest Income	(14,963)			(39,000)
Other Income	(799,864)			
Interest Expense	1,917,899	1,998,000	2,673,815	3,000,000
Amort Bond Issue Costs		-	410,000	-
Total Other Income / Expense	3,756,459	5,598,000	6,683,815	6,561,000
Net Income	2,318,981	1,093,000	7,185	989,312

Exhibit A
Utah Telecommunication Open Infrastructure Agency
Proposed Budget for the year ended JUNE 30, 2017

	ACTUAL FY 2015	APPROVED FY 2016	PROPOSED FY 2016	PROPOSED FY 2017
OPERATING BUDGET				
Revenue	5,676,910	5,404,903	5,404,903	6,551,382
Agency Expenses				
Wages / Benefits	3,787,009	4,584,295	4,584,295	4,651,633
Other Agency Expenses	782,219	1,051,492	1,070,652	1,318,596
Total Agency Expenses	4,569,228	5,635,787	5,654,947	5,970,229
Total Professional Services	962,870	586,925	567,765	435,600
Total Network Management	2,067,037	2,104,999	2,104,999	2,016,000
Total Operating Expenses	7,599,135	8,327,711	8,327,711	8,421,829
Other Income / Expense				
Other Expense				
Other Income	(9,937,208)	-	-	-
Depreciation	4,549,861	6,600,000	6,600,000	6,600,000
Interest Income	(11,413)	-	-	-
Interest Expense	13,605,789	13,718,784	13,718,784	13,993,784
Total Other Income / Expense	8,207,030	20,318,784	20,318,784	20,593,784
Total Expenses	15,806,164	28,646,495	28,646,495	29,015,613
Net Income	(10,129,254)	(23,241,592)	(23,241,592)	(22,464,231)
CAPITAL BUDGET				
Total Capital Expenditures (1)	2,477,937	7,000,000	7,000,000	1,100,000

(1) CAPEX in FY15 and FY16 covered by RUS Settlement Funds

Exhibit A
Utah Telecommunication Open Infrastructure Agency
Proposed Budget for the year ended JUNE 30, 2017
(Cash Basis)

	PROPOSED FY 2016	PROPOSED FY 2017
OPERATING BUDGET		
Revenue	5,404,903	6,551,382
Agency Expenses		
Wages / Benefits	4,584,295	4,651,633
Other Agency Expenses	1,070,652	1,318,596
Total Agency Expenses	5,654,947	5,970,229
Total Professional Services	567,765	435,600
Total Network Management	2,104,999	2,016,000
Total Operating Expenses	8,327,711	8,421,829
Other Income / Expense		
Other Expense		
Other Income	-	-
Interest Income	-	-
Interest Expense	13,718,784	13,993,784
Total Other Income / Expense	13,718,784	13,993,784
Total Expenses	22,046,495	22,415,613
Net Income	(16,641,592)	(15,864,231)
City Pledge Payments	13,718,784	13,993,784
Accelerated IRU Payment	2,922,808	1,870,447
Accelerated IRU Payment-Assessments		
Total	16,641,592	15,864,231
	-	-
CAPITAL BUDGET		
Total Capital Expenditures (1)	7,000,000	1,100,000

(1) CAPEX covered by RUS Settlement Funds

UTOPIA Detail Budget	ACTUAL FY 2015	APPROVED FY 2016	PROPOSED Fiscal 2016	PROPOSED Fiscal 2017
Total Revenue	5,676,910	5,404,903	5,404,903	6,551,382
Administrative Expense				
Wages / Benefits	3,787,009	4,584,295	4,584,295	4,651,633
Advertising	97,210	267,600	267,600	340,800
Dues / Memberships	300	-	-	12,300
Supplies	8,244	14,100	14,100	14,100
Licenses	-	-	-	-
Training / Seminars	-	31,252	31,252	23,232
Travel	10,698	13,600	13,600	45,600
Meeting Expense	7,108	14,700	14,700	14,700
Bank Service Charges	798	6,000	6,000	6,000
Telecom Expense	79,804	86,400	86,400	91,920
Computer Expense	76,821	75,000	75,000	200,944
Bad Debt Expense	-	-	-	-
Insurance	204,633	210,000	220,000	240,000
Equipment	20,875	26,840	34,000	30,000
Vehicle Expense	62,104	78,000	78,000	72,000
Occupancy	163,584	168,000	170,000	173,000
Utilities	50,039	60,000	60,000	54,000
Admin Expenses	4,569,228	5,635,787	5,654,947	5,970,229
Professional Services				
Accounting	36,000	36,000	36,000	36,000
Payroll / HR	18,098	18,000	30,000	37,200
Public Relations	-	-	-	-
I/T Support	-	-	-	-
Legal	722,647	331,925	300,765	146,400
Lobbyists	157,000	156,000	156,000	144,000
Consulting	-	-	-	-
Contract Labor	29,125	45,000	45,000	72,000
Professional Services	962,870	586,925	567,765	435,600
Total Agency Expense	5,532,098	6,222,712	6,222,712	6,405,829
Network Management				
Head End	304,972	99,999	99,999	12,000
Field Maintenance	871,915	1,008,000	982,000	1,080,000
Electronic Maintenance	61,196	193,000	193,000	72,000
Colocation Fees	562,554	504,000	530,000	564,000
Interconnect Fees	146,858	156,000	156,000	156,000
Easements	119,543	144,000	144,000	132,000
Network Management	2,067,037	2,104,999	2,104,999	2,016,000
Total Operating Expenses	7,599,135	8,327,711	8,327,711	8,421,829
Operating Profit (Loss)	(1,922,225)	(2,922,808)	(2,922,808)	(1,870,447)
Other Income / Expense				
Depreciation	4,549,861	6,600,000	6,600,000	6,600,000
Misc Expense	292,133	-	-	-
Interest Income	(11,413)	-	-	-
Other Income	(10,229,342)	-	-	-
Interest Expense	13,530,005	13,643,000	13,643,000	13,918,000
Amort Bond Issue Costs	75,784	75,784	75,784	75,784
Total Other Income / Expense	8,207,030	20,318,784	20,318,784	20,593,784
Net Income	(10,129,254)	(23,241,592)	(23,241,592)	(22,464,231)

CENTERVILLE
CITY COUNCIL
Staff Backup Report
4/19/2016

Item No. 12.

Short Title: City Manager's Report

Initiated By: City Manager

Scheduled Time: 9:05

SUBJECT

a. Parrish Lane/Pedestrian Bridge fencing project update
b. Schedule public hearing for Accessory Dwelling Unit ordinance

RECOMMENDATION

BACKGROUND

a. There have been further delays in this fencing project, which will be explained by the City Manager.

b. When the Council discussed the Accessory Dwelling Unit issue in their April 5 meeting, they continued the matter to a future meeting and directed staff to provide notice of another public hearing on this subject. This matter could be considered in either the May 3 or 17 council meeting. However, if the Council would like this public hearing notice in the utility bill insert at the beginning of May, then it should be set for May 17. Is this acceptable to the City Council?

CENTERVILLE
CITY COUNCIL
Staff Backup Report
4/19/2016

Item No. 13.

Short Title: Minutes Review and Acceptance

Initiated By:

Scheduled Time: 9:10

SUBJECT

March 23, 2016 joint work session (amended from 4-5-2016 meeting); April 5, 2016 work session, regular Council meeting and closed meeting minutes

RECOMMENDATION

BACKGROUND

Approval of the minutes has been scheduled late in the agenda this time because the March 23 work session minutes serve as a record of the outcome of the Council's goal-setting process, which is the topic of the next item on the agenda.

ATTACHMENTS:

Description

- March 23, 2016 joint work session (amended from 4-5-2016 meeting)
- April 5, 2016 work session
- April 5, 2016 regular Council meeting

Minutes of the Centerville City Council and Planning Commission joint **work session** held Wednesday, March 23, 2016 at 5:30 p.m. at Centerville City Hall, 250 North Main Street, Centerville, Utah.

COUNCIL MEMBERS PRESENT

Mayor	Paul A. Cutler
Council Members	Tamilyn Fillmore William Ince Stephanie Ivie George McEwan Robyn Mecham

PLANNING COMMISSION PRESENT

Chair	David P. Hirschi
Commissioners	Kevin Daly Cheylynn Hayman Gina Hirst Logan Johnson Scott Kjar Becki Wright
STAFF PRESENT	Steve Thacker, City Manager Lisa Romney, City Attorney Cory Snyder, Community Development Director Jacob Smith, Assistant to the City Manager Katie Rust, Recording Secretary
STAFF ABSENT	Blaine Lutz, Finance Director/Assistant City Manager

GOAL SETTING WORK SESSION

Mayor Cutler commented that the following goals appear to be common between the Council and Planning Commission goal lists: review of the Subdivision Ordinance and open space/sensitive lands; preserve foothills for recreation; West Centerville planning; and the South Main Street Corridor (SMSC). Chair Hirschi remarked that both bodies have spent a great deal of time looking at the SMSC Plan and considering what needs to be done. He stated the Planning Commission considers it a high priority primarily because it will take time to get through all of the information and discussion necessary to present a recommendation to the Council. Regarding sensitive lands, he said the Planning Commission is expecting a report from staff at their meeting later in the evening. He added that City trails/pathways and foothill recreation improvements go hand in hand. The Planning Commission met with the Trails Committee at their last meeting for a presentation. Mayor Cutler added that Davis County is considering using Prop 1 funds to improve the Bonneville Shoreline Trail, and is interested in input from Centerville. The group discussed possible ways to coordinate with the County. Cory Snyder, Community Development Director, said he feels the City should take a comprehensive look at future needs and opportunities for connectivity to trails both on the east and west sides of the city, as well as urban pathways providing circulation within the community.

Regarding County plans for the Bonneville Shoreline Trail, Mr. Snyder pointed out that a significant amount of land in the Centerville foothills is private property. Commissioner Daly commented that some of the most developable land in the foothills is on the south end, and is

owned by the City. He said it is his impression citizens do not want the foothill property developed. The City could put concrete plans in place to promote recreation and prevent development. Councilwoman Fillmore said she would love for both the Council and the Planning Commission to have a stronger understanding of the long-term cost of infrastructure.

Chair Hirschi said he believes the west side is going to become much more vibrant with the pedestrian bridge over the freeway, the Maverik going in on the corner of 1250 West and Parrish Lane with a Legacy Trail connection, and the new housing development. He stated the City needs to be ahead of the curve with planning. Chair Hirschi added that some of the industrial companies on the west side are scaling back operations. Councilwoman Fillmore said she feels one of the weaknesses of the previous discussions was the focus on transportation. She suggested new discussions begin without the same emphasis on transportation. Chair Hirschi said he feels there are a lot of commercial opportunities for the area that make sense. Councilwoman Fillmore suggested involving West Bountiful in a more in-depth way.

Mayor Cutler said in the past there has been general consensus regarding encouraging business on the west side north of Parrish Lane. The Mayor expressed the opinion, and Mr. Snyder agreed, that extending 1250 West to connect with Farmington will be key to developing the area. The City will want to consider the possibility of an Economic Development Area to help with infrastructure. The Council and Planning Commission seemed to be in agreement that they are not in favor of residential development at the north end of the west side. City Manager Thacker suggested removing the suggestion from the General Plan.

Regarding the west side south of Parrish Lane, Councilwoman Fillmore said her greatest concern is that a heavy industrial use will expand in a way that conflicts with what is desired. She said she would like to reduce the risk by putting something in place to prevent undesirable expansion. Mr. Snyder responded the General Plan could be amended to remove heavy industrial use. Councilwoman Fillmore stated that should be an expedited action. In addition, she said she feels a cohesive, solid ordinance would put the city in a stronger position for this area rather than waiting for a PDO from a developer. Mayor Cutler said it is his impression the Shorelands Commerce Park will be mainly flex-space or light industrial. Chair Hirschi commented he feels the focus south of Parrish Lane should be a continuation of what is happening now - a mixture of office space, residential, entertainment, and business space, with the possibility of some mixed-use or residential transitioning to the West Bountiful border. Councilwoman Mecham said she would like to see heavy industrial limited. Commissioner Wright pointed out that office space should be encouraged as an important aspect of a community. Councilman McEwan suggested the Planning Commission look at centers of gravity for particular types of industry to be realistic with planning. Mayor Cutler commented that centers of gravity will expand as the Wasatch Front continues to grow. Chair Hirschi pointed out the west side is a positive, desirable location transportation-wise, with two freeway accesses.

Councilman Ince asked if Centerville has a formal relationship with a group like the Chamber of Commerce trying to bring companies to the city. Mr. Thacker responded the City does not actively recruit businesses. The Mayor stated that Davis County has an Economic Development Department that actively recruits. Mr. Snyder added there is also a private/public partnership, the Davis County Business Alliance, which does a lot of promotion of the Davis County area. He mentioned that established infrastructure and the extension of 1250 West would put the city in a better position to compete in the site-ready market. Councilman Ince pointed out that Centerville is the only city in South Davis County with UTOPIA, which could be a selling point.

Chair Hirschi stated the Planning Commission would like to streamline administrative decisions and procedures, delegating more decision-making to staff and allowing the Planning Commission more time for proactive planning. Councilman Ince said his goal is to avoid getting stuck again with what happened on the Hafoka property on Porter Lane. He pointed out that the community is divided over what should happen on South Main Street. Councilwoman Mecham agreed, and said she would like to know what uses would be allowed in specific zones so the Council can anticipate and avoid surprises. Mr. Snyder cautioned the Council and Planning Commission against getting caught up with design details, and suggested the issue is whether or not they are comfortable with the multi-family development ordinance.

At 6:50 p.m. the Planning Commission moved upstairs for their regular meeting, and the Council took a break, returning at 7:10 p.m. The Council discussed the goals rated highest priority by the Council prior to the meeting.

Accessory building setbacks – Councilwoman Fillmore said she feels the Planning Commission should review accessory building setbacks and recommend revisions to provide a level of protection.

Flag-lot ordinance – Councilwoman Mecham asked why the City allows two adjoining flag lots, considering the loss of privacy for the entire surrounding neighborhood. Mayor Cutler pointed out that sometimes flag lots are appropriate. Councilwoman Fillmore stated she thinks the City is at risk with the flag-lot ordinance as it is currently written, adding that setbacks and height ratios should be carefully considered. A majority of the Council appeared to be in favor of directing the Planning Commission to review the flag-lot ordinance.

Accessory Dwelling Units (ADUs) – Councilwoman Mecham said she does not think the City will get a lot of applications for ADUs. Councilwoman Fillmore agreed, but stated she would like citizens to have a legal route to do something she believes will happen anyway.

Land-use planning for west side – The Council discussed the desire to eliminate heavy-industrial use from the west side. Mayor Cutler suggested property owners should be included if another work session is held regarding the west side.

RAP Tax revenue usage – Mayor Cutler reported the City has opportunity to use a graduate student to conduct a public outreach effort regarding Island View Park. A majority of the Council seemed supportive. Councilwoman Ivie emphasized that neighbors should be made aware that changes will take time and will not happen immediately. Mr. Thacker suggested the Council's goal with RAP Tax revenue could be: "maintain what we've got, replace what we've lost, and finish what we've started." Councilwoman Mecham asked if it would be possible to solicit donations from park equipment companies. Councilwoman Fillmore suggested the idea could be presented to the Parks Committee to gauge their interest. Councilwoman Mecham suggested waiting until a plan for Island View Park is in place. It was suggested the outreach for park improvement should include the entire city rather than just park neighbors. Mayor Cutler reported the Recreation District is in need of more playing fields. He suggested the Recreation District might be willing to donate funds to help complete new fields at Community Park, or the City could possibly borrow funds from the Recreation District to complete the fields sooner than currently expected. Mr. Thacker added that a loan could be made from the Cemetery Perpetual Care Fund or the Theatre Reserve Fund for the same purpose. Mayor Cutler said he feels the options would be worth exploring, but firm cost estimates will be needed. The entire Council indicated they are in favor of moving forward with

the planning stage for both Island View Park and the completion of the Community Park expansion project.

UTOPIA – The Council requested a presentation from UTOPIA executives regarding how Centerville could improve marketing efforts.

South Main Street Corridor (SMSC) Plan – The Council discussed the desired scope of continued SMSC planning. Councilman McEwan expressed the opinion that property owners should have a lot of input. Mayor Cutler suggested the Planning Commission finish their current recommendations by May, to be presented at a joint work session.

Hillside plans and zoning – The Council discussed private property on the hillside, and appeared to be in agreement that the city is protected against hillside development at this point.

Cemetery expansion options – Councilwoman Fillmore repeated a comment made by former-Councilman Higginson that every city is dealing with diminishing cemetery space and every city is going to run out someday, even if more space is added. Mayor Cutler and Councilwoman Ivie indicated they are in favor of exploring the possibility of a mausoleum. Referring to the County-owned property on 100 South, Councilwoman Ivie said she believes the land is still necessary as a debris basin. Mr. Thacker responded that the County would be able to maintain the sediment basin with a few residential lots on a portion of the property. Councilman McEwan suggested a public/private partnership with Russon Brothers Mortuary to evaluate the possibility of a mausoleum. Staff was directed to get a cost estimate for a feasibility study for a cemetery on the hillside City-owned property.

Extension of 1250 West – Councilwoman Mecham said she will encourage the County Transportation Committee to discuss the extension of 1250 West.

The Council agreed on the following priorities for the Planning Commission:

Long-term big items

1- South Main Street Corridor (recommendation by May)
2- West side plan (begin by 3rd quarter)
3- Hillside recreation – working with County

Short-term (1-2 meetings to complete)

1- Remove Very-High Industrial zoning
2- Review accessory building setbacks (complete by end of 2nd quarter)
3- Review flag-lot ordinance (begin after completing west side plan)
4- Update bike/trail master plan and adopt into General Plan

Fluoride – A majority of the Council indicated a desire to put the cost of fluoride as a line item on the city utility bill. Mr. Thacker suggested the utility bill change could be made in conjunction with the proposed water rate change. The original decision to fluoridate the water was a County-wide vote. Councilwoman Ivie said she would like to document the feedback received from residents. Some of the Council expressed a desire to write to the County requesting the issue be put back on the ballot.

- The Council agreed to let the Landmarks Commission make decisions regarding Historic District signage.

- The Council agreed on the need to install sound panels in the Council Chambers this year to improve the sound system.
- The city did not receive TAP funding from WFRC for sidewalk lighting on Parrish Lane.
- The Council discussed the Chick-fil-A and Dairy Queen drive-thru situations and agreed there is not much they can do at this point.
- Councilwoman Fillmore suggested the Council have a goal to end Council meetings by 10:00 p.m.

ADJOURNMENT

The work session was adjourned at 8:55 p.m.

Marsha L. Morrow, City Recorder

Date Approved

Katie Rust, Recording Secretary

Minutes of the Centerville City Council **work session** held Tuesday, April 5, 2016 at 5:30 p.m. in the Centerville City Council Chambers, 250 North Main Street, Centerville, Utah.

MEMBERS PRESENT

Mayor	Paul A. Cutler
Council Members	Tamilyn Fillmore William Ince (arrived at 5:41 p.m.) Stephanie Ivie George McEwan Robyn Mecham
STAFF PRESENT	Blaine Lutz, Finance Director/Assistant City Manager Lisa Romney, City Attorney Katie Rust, Recording Secretary
STAFF ABSENT	Steve Thacker, City Manager Jacob Smith, Assistant to the City Manager
VISITORS	Roger Timmerman, UTOPIA Executive Director Kim McKinley, UTOPIA Marketing Director Kirt Sudweeks, UTOPIA Chief Financial Officer

WORK SESSION RE: UTOPIA

Roger Timmerman, UTOPIA Executive Director, reported on UTOPIA operations, infrastructure expansion, technology, and strategies moving forward. Mr. Timmerman and Kirt Sudweeks, UTOPIA Chief Financial Officer, reported on UTOPIA/UIA finances. Mr. Timmerman stated they do not anticipate assessing the cities for operational expenses in FY 2016. Timing of repayment of the assessments back to the cities has not been set. The UTOPIA representatives explained that the UIA Board has chosen to invest revenues in continued growth and refresh of the system. Councilman McEwan commented that data showing the total number of actual connections relative to the total number of possible connections would be helpful.

Kim McKinley, UTOPIA Marketing Director, and Mr. Timmerman explained current marketing efforts. Mr. Timmerman explained that UTOPIA anticipates a payback period of less than 60 months when determining return on investment (ROI). UTOPIA has only built outside of the UTOPIA cities when financially beneficial to the UTOPIA cities with and AOI of 24 months. Mayor Cutler recommended the City include a UTOPIA mailer in the City utility bill/newsletter a couple times each year. The UTOPIA PowerPoint presentation is available with the agenda on NovusAgenda.

Councilman Ince stated he is offended that UTOPIA is essentially controlled by three cities. He asked if it has been discussed that a certain number of smaller-city votes should be necessary for a vote to pass. The Mayor responded that the idea was discussed, but agreement was not reached. Councilman McEwan asked how UTOPIA intends to leverage Senate Bill 114. Mr. Timmerman responded that Senate Bill 114 is designed as a tool available to cities to fund completion of the network.

ADJOURNMENT

Mayor Cutler thanked the UTOPIA representatives for their time, and adjourned the work session at 6:57 p.m.

_____ _____

Marsha L. Morrow, City Recorder Date Approved

_____

Katie Rust, Recording Secretary

Minutes of the Centerville **City Council** meeting held Tuesday, April 5, 2016 at 7:00 p.m. at Centerville City Hall, 250 North Main Street, Centerville, Utah.

MEMBERS PRESENT

Mayor	Paul A. Cutler
Council Members	Tamilyn Fillmore William Ince Stephanie Ivie George McEwan Robyn Mecham
STAFF PRESENT	Blaine Lutz, Finance Director/Assistant City Manager Lisa Romney, City Attorney Kevin Campbell, City Engineer Cory Snyder, Community Development Director Katie Rust, Recording Secretary
STAFF ABSENT	Steve Thacker, City Manager Jacob Smith, Assistant to the City Manager
VISITORS	Interested citizens (see attached sign-in sheet)

PLEDGE OF ALLEGIANCE

PRAYER OR THOUGHT Blaine Lutz

OPEN SESSION

Mark Gabriel – Mr. Gabriel stated many residents are noticing that both black and blue waste cans are being picked up by the same waste disposal trucks, and expressed concern that the citizens are paying for recycling when it's being disposed of in the land fill. He asked when the Council will notify residents that they do not need to be using the blue recycling cans. He mentioned that China is no longer purchasing recyclables from the U.S., and said it is his understanding that both regular and recycling is now ending up in landfills.

Mayor Cutler responded that the trucks that pick up regular waste and recycling are identical. He said he was informed by ACE Disposal, the company contracted by the city, that Centerville's recyclables have always been taken to the recycling facility, never the landfill.

MINUTES REVIEW AND ACCEPTANCE

The minutes of the March 15, 2016 Council meeting and the March 23, 2016 joint work session were reviewed. Councilwoman Fillmore and Mayor Cutler requested changes to the March 15, 2016 Council meeting minutes. Council members Ivie and Fillmore and Mayor Cutler requested changes to the March 23, 2016 work session minutes, and Councilwoman Ivie requested the short-term goals for the Planning Commission listed on page 4 include mention of which items the Council would like returned to them in the second quarter. Councilman McEwan made a **motion** to accept the March 15th regular meeting minutes as amended, and table approval of the March 23rd work session minutes. Councilwoman Mecham seconded the motion, which passed by unanimous vote (5-0).

INTERLOCAL AGREEMENT WITH DAVIS COUNTY FOR BARNARD CREEK CULVERT PROJECT – RESOLUTION NO. 2016-08

Lisa Romney, City Attorney, explained that the City and County desire to enter into an agreement for a cooperative and joint project to replace the Barnard Creek culvert that runs through the UDOT Maintenance Yard property at approximately 1150 North 1300 West. She recommended the motion to approve be subject to RDA approval of funding, and subject to any changes requested by Davis County and approved by City staff. Kevin Campbell, City Engineer, explained that the project is on the City's Master Plan. The existing pipe is corrugated metal, to be replaced with reinforced concrete pipe.

Councilman Ince made a **motion** to approve Resolution No. 2016-08 approving an Interlocal Agreement between Centerville City and Davis County for the Barnard Creek Culvert Project, subject to RDA approval of funding, and subject to any changes requested by Davis County and accepted by City staff. Councilwoman Fillmore seconded the motion, which passed by unanimous vote (5-0).

BID FOR STREETS CRACK SEAL AND SLURRY SEAL 2016 PROJECT

Mr. Campbell explained the staff recommendation to award bid for streets crack seal and slurry seal to Intermountain Slurry Seal for 2016. Councilwoman Mecham said the $4,000 allocated by Intermountain Slurry Seal on the bid for striping crosswalks seems excessive, and said she feels the work could be done for less by the Public Works Department. Mr. Campbell agreed, and said the crosswalk striping could be removed from the scope of work. He explained difficulties staff has experienced working with Morgan Pavement Maintenance in the last few years. Even though they were low bid, he recommended that the contract be awarded to Intermountain Slurry Seal. Councilwoman Ivie asked if there is a way to make the crosswalks less slick when wet. Mr. Campbell responded the Public Works Department could be consulted regarding crosswalk materials and options.

Councilwoman Ivie made a **motion** to award bid for the Streets Crack Seal and Slurry Seal 2016 Project to Intermountain Slurry Seal removing item #4 in the amount of $217,335. Councilman Ince seconded the motion, which passed by unanimous vote (5-0).

PUBLIC HEARING – ZONE MAP AMENDMENT (REZONE) – 77 WEST LUND LAND FROM AGRICULTURAL-LOW TO RESIDENTIAL-LOW

On March 23, 2016, the Planning Commission reviewed and recommended for approval the proposed rezone of 4.85 acres of property located at approximately 77 West Lund Lane from Agricultural-Low (A-L) to Residential-Low (R-L). The Mayor disclosed that he knows the applicant, and that his brother and sister-in-law own neighboring property. Lisa Romney, City Attorney, did not feel that the Mayor needed to recuse himself. The Council agreed. Cory Snyder, Community Development Director, emphasized that the application is for amendment to the Zoning Map. An application for conceptual subdivision was submitted to the City at the same time to show what is intended for the property. However, the Planning Commission has chosen to hold the application for conceptual subdivision until the Council has taken action regarding the rezone. If rezone occurs, anything available under the rezone is potentially possible. Mr. Snyder outlined the criteria considered with the rezone request: 1) is the request consistent with the General Plan; and 2) do any internal or external problems exist that would conflict with the proposed rezone. The Community Plan specifies the property as low-density; the General Plan categorizes both A-L and R-L as low-density. Mr. Snyder reported the

Planning Commission found the request to be consistent with the General Plan and has recommended rezone of the property.

Phil Holland, representing Wright Development Group, stated his firm feels a responsibility to build a great project. They feel the requested rezone is consistent with the City's General Plan. Mr. Holland said it is anticipated that average lot sizes within the development will be .42 acres. He pointed out that most of Centerville is zoned R-L, with the possibility of .25 acre lots. He stated that Wright Development Group is aware of density conflicts within the community, and feels their proposal represents the opposite of high-density.

Mayor Cutler opened a public hearing at 7:45 p.m.

Chris Cutler – Mr. Cutler stated he owns property adjoining the subject property on the south. He said he feels the A-L area on the north end of Centerville is an important part of the community. He said he would like the City to maintain the A-L as the last part of Centerville heritage.

Ron Dean – Mr. Dean proposed the City leave the lot size at .5 acres, and suggested the lot price could be increased to compensate.

Lisa Robinson – Ms. Robinson stated the City General Plan differs from what she feels should happen for that part of Centerville. She requested the Council look at the City Plan to ensure that the area is maintained the way it is now for the enjoyment of those who have already purchased property in the area.

Matthew Cutler – Mr. Cutler pointed out that the motto of Centerville City is "The Friendly City by the Great Salt Lake". He added that the word "friendly" means to coexist without harm. He expressed the opinion that on both a global and a city-level, homogenization of culture is harmful. Mr. Cutler stated he feels rezoning from A-L would destroy the cultural integrity of north Centerville and reduce the quality of life for residents in the area. He referred to the recent creation of the Deuel Creek Historic District, and asked the Council to respect the historic aspect of northern Centerville and keep the A-L Zoning.

Heather Healey – Ms. Healey said her parents own property southwest of the subject property. She said they would like to see the property remain A-L to maintain the integrity of property in the northern Centerville area.

Mike Holden – Mr. Holden said he bought his lot because it was .5 acres. He said he feels A-L gives options not available with R-L, including the ability to have one large animal, which gives a certain kind of personality to an area. He said he would oppose anything smaller than .5 acre lots.

John Higley – Mr. Higley stated he owns property directly west of the subject property. He pointed out the small difference between .42 acres and .5 acres, and said to him it is an issue of lifestyle choice, not property size. He said he is in favor of allowing the proposal as shown, given the fact that any changes would have to be presented to the Planning Commission.

Robert Hawkes – Mr. Hawkes said he is the seller of the subject property, and said he would like to see the requested rezone approved. He stated he chose not to accept bids from firms offering more money with higher density proposals because he did not want to do that to

Centerville. He expressed confidence that Wright Development Group will not drastically reduce lot sizes after rezone. Referring to Mr. Cutler's comment, he stated that the cultural collapse of northern Centerville already occurred, with higher-density housing to the west and in nearby Farmington. Mr. Hawks stated he feels the application meets all criteria outlined by the City.

Mila Cutler – Ms. Cutler stated that, in the past, she has felt that public concerns have been ignored by the Planning Commission and Council. She said she did not like the development on the corner of Lund Lane, but felt at the time that her concerns were ignored. She agreed with Matthew Cutler's comments regarding cultural diversity. She said her parents originally bought their property to give their children an opportunity to learn to work with the land and animals, an opportunity not available in the R-L zones. Those living in north Centerville are used to letting their children and grandchildren have free rein of the area without worrying about their safety. She said she would like the property to stay zoned for .5 acre lots.

Mark Gabriel – Mr. Gabriel suggested that, if the issue is one of cultural change, the ordinance could be changed to allow a large animal on lots slightly smaller than .5 acres.

Mayor Cutler closed the public hearing at 8:05 p.m.

Mr. Holland expressed appreciation for the public comments. He repeated that the proposal is consistent with the City's General Plan criteria for the neighborhood. He commented that everyone wants a bigger lot. In America citizens have property rights, and cities have guiding zoning principles.

At 8:07 p.m. Mayor Cutler allowed an additional public comment.

Josh Christensen – Mr. Christensen stated he moved to Centerville for a .5 acre lot. He expressed concern that following a rezone to R-L, nothing would prevent the developer from switching to .25 acre lots. He asked Mr. Holland if Wright Development Group will be building the homes on the lots themselves. Mr. Holland responded that his firm will develop the lots as custom lots for anyone wanting to custom-build a home. Mr. Holland commented that the market does not ask for .5 acres or seek animal rights anymore. He said his firm is constrained by what can be done with the property because of shape, and they feel large, custom lots are the right choice.

Councilman McEwan referred to the multiple criteria in Title 12 of the Zoning Code used when considering a rezone:

1. whether the property, text, or map amendment is consistent with the goals, objectives, and policies of the General Plan
2. whether the proposed map amendment is harmonious with the overall character of existing development in the vicinity of the subject property
3. the extent to which the proposed map amendment may adversely affect adjacent properties
4. for proposed map amendments, the adequacy of facilities and services intended to serve the subject property including, but not limited to, roadways, parks, recreation facilities, police and fire protection, schools, storm water drainage systems, water supplies and waste water, and refuse collection.

Councilman McEwan agreed that the proposal is probably consistent with the first criteria, but emphasized that all four criteria should be considered. He said he does not believe the proposal is consistent with criteria 2 and 3. Mr. Holland commented that the Wasatch Front is becoming more populated, and all cities have experienced movement from A-L to R-L. He added that projects to the east and west of the subject property were rezoned R-L for development, and responded that the proposal is harmonious with existing development in the area. Mr. Snyder responded he feels it is extreme to say the proposal is not harmonious. He explained that the General Plan specifies the change to R-L will be considered on a case-by-case basis, which naturally creates peninsulas of different zoning as properties develop at different times. Mr. Snyder also pointed out that the Community Plan advises that at least five acres is necessary for agricultural preservation, with agricultural zoning of .5 acres being inadequate. He expressed the opinion that comparing the subject property to open property is an unfair comparison. Mr. Snyder added that .5 acre lots would be difficult on some of the neighboring undeveloped property. Mr. Snyder stated the proposal would not cause economic or infrastructure injury, and said he feels the request of neighbors to handcuff the property owner is more problematic than the arguments against approval.

Councilwoman Fillmore agreed that the affect on neighboring properties should be considered, but said the Council also needs to be mindful of respecting property rights, and not set a precedent of limiting property rights. She said she believes this General Plan option respects cultural diversity, allowing those who desire to continue using their property as A-L to do so, while leaving options available to those who want to develop R-L. Councilwoman Fillmore agreed that Centerville has an agricultural heritage, and added that Centerville also has a heritage of change, allowing owners to do something different with their property. She pointed out that Wright Development Group has a desire to keep the property as close to A-L as possible, which may not be the case at some point in the future with a different developer if the rezone is not approved at this time. Councilwoman Ivie stated it is her desire to re-look at the General Plan this year. Councilman Ince referred to the frustration expressed by Ms. Cutler, and said he has felt for a long time that listening to a public hearing and making a decision three minutes later is disrespectful to the citizens who shared opinions. He suggested the Council table the rezone to the next meeting to allow Council members time to consider what was said. Councilman McEwan indicated support, adding that it would be good for everyone to have time to consider the four criteria.

Councilman Ince made a **motion** to table the Zone Map Amendment to the April 19th meeting. Councilman McEwan seconded the motion. Councilwoman Mecham thanked Mr. Hawkes for wanting to keep big lots on the property. She expressed frustration that there is not a way to zone for what is asked without the risk of allowing .25 acre lots. Councilwoman Ivie thanked the citizens who participated in the public hearing. The motion passed by unanimous vote (5-0). Mr. Snyder commented that the Planning Commission report addresses all four criteria.

MUNICIPAL CODE AMENDMENT – SECTION 7-02-024 – POSSESSSION OF WILD ANIMALS PROHIBITED – ORDINANCE NO. 2016-09

Lisa Romney, City Attorney, stated that pursuant to an Interlocal Agreement entered into by Davis County and Centerville City, the County provides animal control services for the City. To simplify enforcement matters the City has adopted by reference the Davis County Animal Control Ordinance as set forth in Title 6 of the Davis County Ordinances. It has come to the City's attention that the County Animal Control Ordinances provide a number of exceptions to the prohibition on the possession of wild animals. While these exceptions may be reasonable

for enforcement within the County given the semi-rural development within the County, not all of these exceptions make sense for developed areas of the City. These exceptions also conflict with certain provisions of the Centerville Zoning Code. City Attorney Romney explained the proposed amendment prepared by staff as directed by the Council, which adds protected or controlled amphibians and reptiles to the definition of wild animal, and eliminates the exception currently granted to those possessing a Certificate of Registration from the DWR. The amendment also prohibits housing more than a certain number of non-controlled animals. Ms. Romney explained alterations recommended by representatives of the DWR, including the fact that the amendment could be interpreted to prohibit pet stores. She recommended the Council add pet stores to the list of exclusions.

Councilman Ince asked if the housing of controlled birds is included in the ordinance. Ms. Romney responded that the language does not specifically regulate birds. Councilwoman Ivie asked if work animals such as bison, yak, or llama would be included. Ms. Romney read aloud a portion of the ordinance specifying that animals would constitute an unreasonable danger to human life, health, or property if not kept, maintained, or confined in a safe and secure manner. Councilman McEwan pointed out that any animal not considered a commonly domesticated breed would fall under this ordinance.

Councilman Ince made a **motion** to adopt Ordinance No. 2016-09 enacting Section 7-02-024 of the Centerville Municipal Code regarding the Possession of Wild Animals, with the addition of "pet store" to the list of exclusions as recommended by the City Attorney. Councilwoman Fillmore seconded the motion, which passed by unanimous vote (5-0).

ACCESSORY DWELLING UNITS ORDINANCE

Mayor Cutler explained that staff would like further direction from the Council regarding how to proceed with the Accessory Dwelling Unit (ADU) Ordinance. Council members Ivie and Mecham indicated they would be fine moving forward with attached ADUs, but not detached. Mr. Snyder commented that in his research he has found people tend to prefer detached ADUs so that family members can live somewhat separated from the main residence. Councilwoman Mecham said she would be willing to consider detached following more study, but would not feel comfortable putting it in the ordinance at this time. She said it is her perception that a majority of the public comments have been against detached ADUs. Councilman McEwan stated he is not in favor of accessory buildings at all.

Councilwoman Mecham said she would like the ADU ordinance to stipulate single-family homes rather than conditional in A-L and R-L Zones. Mr. Snyder responded that multiple units are already allowed in multi-family zones. The ADU requirements might conflict with the multi-family requirements. Councilwoman Fillmore stated that during a previous Council meeting she made a motion to remove detached ADUs from the ordinance, to increase the allowed percentage of the home from 25% to 35%, and also to remove the maximum square footage. She said she would be fine with 35% or 40%.

Councilman McEwan made a **motion** directing staff to prepare the ADU ordinance with no provision for detached, and allowing the square footage of an attached ADU to equal up to 50% of the structure. Councilman Ince agreed with the 50%, but stated there should be restrictions on parking availability and numbers. Councilman Ince stated he feels detached could be appropriate on a large enough lot. Mr. Snyder pointed out that the allowed occupancy is determined by the maximum square feet in the ordinance as written (1 occupant per 200 square feet). Councilwoman Fillmore stated her intent was to not be concerned with a specific

number of occupants. She said she is comfortable with the occupancy varying depending on the house size. Councilwoman Mecham said she is not comfortable with variable occupancy. Mr. Snyder pointed out that the proposed 25% and 800 square-foot limits are intended to prevent a single-family residence from being turned into a duplex. The number of occupants has many impacts, and potentially doubling the occupancy of a neighborhood could over time significantly change the neighborhood. Mr. Snyder stated he believes allowing more than 25% of the residence and more than 800 square feet would be a mistake.

Councilman McEwan said he would be comfortable limiting the number of occupants per structure by square footage. Ms. Romney pointed out that trying to limit the total number of occupants in a home would bring up legal issues. Mr. Snyder expressed the opinion that a default occupancy limit could be challenged with the Fair Housing Act. Councilman Ince pointed out that the objective in putting together an ADU ordinance was to bring residents not in compliance into compliance. Councilwoman Fillmore expressed the opinion that if a square-foot limitation is included it should be higher than 800 square feet.

Councilman McEwan made a **motion** directing staff to prepare an ADU ordinance that does not include detached structures, and allows the square footage of an attached ADU to equal up to 50% of the structure, and directing staff to examine and provide legal opinions for restricting the number of occupants in an ADU, whether by square footage or another mechanism. Councilwoman Ivie seconded the motion, which passed by unanimous vote (5-0).

LIAISON REPORT

John Higginson, the City's liaison with the Wasatch Integrated Waste Management District, reported on the new PARC & Save program, and the new mixed waste processing facility. He explained that Wasatch Integrated will be looking into the possibility in the coming months of adding additional separation equipment to separate out more recyclables. Richard Hamik with ACE Recycling and Disposal reported that Centerville recyclables collected by ACE have never been diverted by ACE to a landfill. Mr. Hamik, Mr. Higginson, and the Council discussed the current recyclables market. Responding to a question from Councilman Ince, Mr. Higginson stated that the lifespan of the landfill has been lengthened in large part due to the mixed-waste separation efforts, and city recycling programs. Mr. Higginson suggested public education efforts regarding what should and what should not be placed in recycling cans.

SOLID WASTE COLLECTION CONTRACT

Larry Gibbons, Business Development Director for Rocky Mountain Recycling, explained the relationship between Rocky Mountain Recycling and firms like ACE. He agreed that the current recyclables market is bad, but stated that recyclables are not piling up at the transfer stations, and are not being diverted to a landfill. Efforts have been made to find buyers in the United States. Only very dirty recyclables go to the landfill after separation at the transfer stations. Mr. Gibbons stated that Centerville has a low contamination rate, and agreed with Mr. Higginson's suggestion for public education. He asked the Council to continue supporting the life of the landfill by continuing the city recycling program. Mr. Gibbons and the Council discussed which materials are recycled by Rocky Mountain Recycling. Mr. Gibbons pointed out that items do not need to be rinsed out by residents. The Council appeared to be in agreement that more public education is necessary regarding what and how to recycle.

Mr. Gibbons emphasized that Rocky Mountain Recycling sells all recyclable materials they receive, but considering the market, a change to the financial arrangements is necessary.

Phil Markham with ACE Recycling and Disposal thanked the Council for considering an extension of the waste disposal contract. He explained that in November 2015 Rocky Mountain Recycling began charging a tipping fee of $15 for every load dropped off at their facility, and now charges a contamination fee of $55 per ton. Mr. Markham proposed a 50/50 cost-sharing arrangement between ACE and Centerville for the cost of processing Centerville recyclables, with the same 50/50 arrangement for any revenue generated in the future. The Council and Finance Director Blaine Lutz discussed the cost-sharing proposal. Based on the proposed two-year contract extension, Mr. Lutz said he recommends holding the citizen rates even except for a small increase to the green waste rate to compensate for the increase in the green waste fee from ACE.

Councilman McEwan made a **motion** directing staff to prepare a two-year extension of the contract with ACE, with modified terms to cover the increase in green waste disposal. Councilman Ince seconded the motion, which passed by unanimous vote (5-0). Councilwoman Mecham expressed appreciation for the quality of drivers operating ACE collection trucks.

MUNICIPAL CODE AMENDMENTS – TITLE 14 - TRAFFIC CODE

Due to the late hour, Councilman McEwan made a **motion** to table this item. Councilwoman Ivie seconded the motion, which passed by unanimous vote (5-0).

MAYOR'S REPORT

- The Mayor included the February monthly report and the 2015 annual report for the South Davis Metro Fire Agency on NovusAgenda.
- Mayor Cutler reported that the Forest Service Job Corps is looking for projects that would provide a service and give training to students. He suggested Council members keep the opportunity in mind in relation to their liaison assignments.
- The Davis County Health Department is putting together programs intended to help prevent teenage and adult male suicides. The Health Department also has an online forum for anonymously reporting a polluting vehicle.
- Mayor Cutler referred to a proposal to start the July 4th parade earlier than 9:00 a.m., and said he would recommend keeping the start time close to 9:00.
- The Mayor reported on a meeting held with property owners regarding the 1825 North Street Reconstruction Project. Councilwoman Fillmore said she would like the bid to include the possibility of a solution that would allow tree roots to grow in park strips without affecting sidewalks. Councilman McEwan said he would be more comfortable leaving new trees out of the bid, considering the potential cost of such a solution. He pointed out that a lot more education would be needed, and he would not want to hold up the project. Councilman Ince suggested the City proceed with the 1825 North Project, but start looking into other options for the future. Councilwoman Fillmore responded that staff would not be happy if the Project was postponed, but the Project is not an emergency. She stated that if the bid is sent as currently planned, and the Project occurs as currently planned, the City would be dooming the success of future trees. Councilman Ince asked if the Project could be put off until next year to have a policy in place. Mayor Cutler pointed out that staff has felt some urgency with the Project because of liability. Councilwoman Ivie said she would like the Council to get more education quickly. Councilwoman Mecham pointed out that the cost of the Project would likely increase if the City waited a year. A majority of the Council agreed that staff should go through with the bid as planned.

CITY MANAGER'S REPORT

Ms. Romney reported that she sent a letter to the DWR regarding the reptile house on Applewood Drive being in violation of City Zoning Code. She said she feels it would be best to let the situation play out as far as possible with the DWR. She will bring an update to the Council at the first meeting in May.

MISCELLANEOUS BUSINESS

Council members Ivie and Ince discussed funding for wildfire prevention.

RDA MEETING

At 10:42 p.m. Councilman McEwan made a **motion** to move to a meeting of the Redevelopment Agency of Centerville. Councilwoman Ivie seconded the motion, which passed by unanimous vote (5-0). In attendance were: Paul A. Cutler, Chair; Stephanie Ivie, Vice-Chair; Directors Fillmore, Ince, McEwan, and Mecham; Blaine Lutz, Finance Director; Lisa Romney, City Attorney; and Katie Rust, Recording Secretary.

The Council returned to regular meeting at 10:44 p.m.

ADJOURNMENT

At 10:45 p.m. Councilman McEwan made a **motion** to adjourn the Council meeting and move to a closed meeting for the purpose of discussing pending or reasonably imminent litigation. Councilwoman Ivie seconded the motion, which passed by unanimous vote (5-0).

_____ _____

Marsha L. Morrow, City Recorder Date Approved

_____

Katie Rust, Recording Secretary

(Not for public dissemination)
Minutes of the **Centerville City Council closed meeting** held Tuesday, April 5, 2016 at 10:45 p.m. in the Centerville City Hall Council Chambers, 250 North Main Street, Centerville, Utah.

MEMBERS PRESENT

Mayor	Paul A. Cutler
Council Members	Tamilyn Fillmore William Ince Stephanie Ivie George McEwan Robyn Mecham
STAFF PRESENT	Blaine Lutz, Finance Director/Assistant City Manager Lisa Romney, City Attorney Katie Rust, Recording Secretary
STAFF ABSENT	Steve Thacker, City Manager Jacob Smith, Assistant to the City Manager

PENDING OR REASONABLY IMMINENT LITIGATION

Lisa Romney, City Attorney, reported that a lawsuit regarding the April 14, 2014 officer involved shooting was filed on Thursday, March 24, 2016. Heather White, attorney for Centerville, filed an answer on Friday, March 25th. Ms. Romney advised the Council to not comment publicly on pending litigation, and to refer any questions to Ms. White.

ADJOURNMENT

Councilwoman Ivie made a **motion** to adjourn the closed meeting at 11:01 p.m. Councilman Ince seconded the motion, which passed by unanimous vote (5-0).

_____ _____

Marsha L. Morrow, City Recorder Date Approved

_____

Katie Rust, Recording Secretary

CENTERVILLE

Staff Backup Report
4/19/2016

Item No. 14.

Short Title: Clarify goal-setting process outcome

Initiated By: City Manager

Scheduled Time: 9:15

SUBJECT

RECOMMENDATION

The City Manager will seek clarification of the City Council's goals, as expressed in the minutes of the March 23, 2016 work session. Council should refer to the minutes of that work session for this discussion--attached under "Minutes Review and Acceptance" just prior to this matter on the agenda.

BACKGROUND

CENTERVILLE
CITY COUNCIL
Staff Backup Report
4/19/2016

Item No. 15.

Short Title: Miscellaneous Business

Initiated By:

Scheduled Time: 9:45

SUBJECT

a. ULCT Conference Report

RECOMMENDATION

a. Mayor Cutler would like Councilmembers Ince and Fillmore to report on the recent ULCT Conference in St. George.

BACKGROUND

CENTERVILLE
CITY COUNCIL
Staff Backup Report
4/19/2016

Item No. 16.

Short Title: Closed meeting, if necessary, for reasons allowed by state law, including, but not limited to, the provisions of Section 52-4-205 of the Utah Open and Public Meetings Act, and for attorney-client matters that are privileged pursuant to Utah Code Ann. § 78B-1-137, as amended

Initiated By:

Scheduled Time: 9:55

SUBJECT

RECOMMENDATION

At this time staff do not know of a need for a closed meeting, but the agenda allows for that possibility.

BACKGROUND

CENTERVILLE
CITY COUNCIL
Staff Backup Report
4/19/2016

Item No. 17.

Short Title: Possible action following closed meeting, including appointments to boards and committees

Initiated By:

Scheduled Time: 9:55

SUBJECT

RECOMMENDATION

Mayor Cutler may recommend appointments to City boards/committees.

BACKGROUND

CENTERVILLE

Staff Backup Report
4/19/2016

Item No. 18.

Short Title: Adjourn to RDA meeting

Initiated By:

Scheduled Time: 10:00

SUBJECT

RECOMMENDATION

BACKGROUND

CENTERVILLE
CITY COUNCIL
Staff Backup Report
4/19/2016

Item No.

Short Title: Items of Interest (i.e., newspaper articles, items not on agenda); Posted in-meeting information

Initiated By:

Scheduled Time:

SUBJECT

RECOMMENDATION

BACKGROUND

ATTACHMENTS:

Description

- Monthly Building Report for March 2016

Steve Thacker
City Manager

Centerville City
Building & Safety Department

655 North 1250 West, Centerville, Utah 84014

Monthly Building Report for March 2016

Construction Type	# of Permits		YTD Structures		Average Home Cost		Construction Valuation	
	Month	YTD	# Units	# Bldgs	Month	YTD	Month	YTD
Single Dwellings	7	16	16	16	297,056.00	276,224.00	2,079,393.00	4,419,584.00
Duplexes / Town Homes	4	9	9	2			836,912.00	1,663,016.00
Apartments	0	0	0	0			-	-
Addition/Alteration/Repair	3	8					65,824.00	309,231.00
Power/Mech	12	24					-	4,253.00
Signage	1	4					4,800.00	36,800.00
Commercial/Tenant Finish	3	5					139,000.00	199,168.00
Detached Structure/Gar	0	1					-	15,464.00
Demolition	0	0					-	-
Pool	0	0					-	-
Miscellaneous	8	19					180,865.00	297,450.00
Total Permits Issued:	**38**	**86**				**Total Permitted Valuation:**	**3,306,794.00**	**7,144,966.00**

	Monthly		YTD Comparison	
Building Permit Related Revenues	**March 2016**	**YTD 2016**	**March 2015**	**YTD 2015**
BUILDING	30,601.44	65,300.69	7,669.46	27,150.34
PLAN CHECK	6,502.95	14,748.51	3,098.58	7,290.63
ELECTRICAL	264.00	792.00	66.00	462.00
PLUMBING	-	-		-
MECHANICAL	528.00	792.00	264.00	594.00
GRADING	-	-		-
STATE SURCHARGE	312.93	651.51	92.02	221.69
WATER DEV.	13,172.00	26,341.00		2,026.00
WATER CONNECTION	6,595.58	9,066.58		12,364.00
WATER METER	2,660.00	5,715.00		430.00
STORM DRAIN	-	-		-
FIRE IMPACT	4,710.00	10,833.00		942.00
PARK IMPACT	20,570.00	47,311.00		4,114.00
DRIVE APPROACH	385.00	875.00		70.00
BOND	11,000.00	26,000.00	2,000.00	8,000.00
SPECIAL IMP DIST/REC	12.00	12.00		-
ENGINEERING	500.00	1,000.00		-
TV INSPECT DRAINS	-	-		-
LANDSCAPING BOND				-
Total Permits Related Revenue:	**$97,204.90**	**$207,458.29**	**$13,380.06**	**$57,664.77**